Congressional Research Service
Informing the legislative debate since 1914

FEMA and SBA Disaster Assistance for Individuals and Households: Application Processes, Determinations, and Appeals

Updated August 6, 2019

Congressional Research Service
https://crsreports.congress.gov
R45238

CRS REPORT
Prepared for Members and
Committees of Congress

Summary

The Small Business Administration's (SBA's) Disaster Loan Program and the Federal Emergency Management Agency's (FEMA's) Individual Assistance (IA) program are the federal government's primary sources of financial assistance to help individuals and households recover and rebuild following an incident. In many cases, disaster survivors need assistance from both programs in addition to other sources of assistance, including private insurance, state and local government assistance, and assistance from voluntary organizations.

Although the SBA Disaster Loan Program and FEMA IA are separate programs administered by different agencies, in many ways they are interconnected. SBA and FEMA share real-time data on disaster loan and grant approvals to identify potential duplication of benefits while providing individuals and households with federal assistance that can be used in conjunction with other forms of assistance to meet recovery needs. The programs are also interconnected in the way they are administered to determine loan and grant eligibility. Eligibility and assistance from one source can affect eligibility and assistance from the other source.

It could be argued that the overlap between the programs provides an effective means to identify duplication of benefits and provide federal assistance; however, the overlap also causes some confusion. Some in Congress are concerned that elements of the application process are not sufficiently transparent. For instance, it is unclear to some what criteria are used to determine assistance eligibility, as well as how decisions are made with respect to whether an applicant should be provided a loan or a grant (or both). It is also unclear whether the SBA and FEMA determine eligibility on a case-by-case basis or if eligibility criteria are applied uniformly.

This report provides an overview of these two programs, including discussions about

- how different types of declarations put the programs into effect;
- the application process for both programs;
- the criteria used by the SBA and FEMA to determine eligibility for assistance and the appropriate types of assistance; and
- the FEMA and SBA appeals processes.

The report concludes with policy observations and considerations for Congress about computer matching agreements, duplication of benefits, and the use of income tests as a screening device for SBA disaster loans and FEMA grants.

Contents

Introduction 1
Overview of Programs 2
SBA Home Disaster Loans 2
Personal Property Loans 2
Real Property Loans 2
FEMA Individual Assistance 3
Mass Care and Emergency Assistance 3
Crisis Counseling Assistance and Training Program 3
Disaster Unemployment Assistance 4
Disaster Legal Services 4
Disaster Case Management 5
Individuals and Households Program 5
Stafford Act and SBA Disaster Declarations, and Designations 8
Stafford Act Declarations 8
SBA Disaster Declarations 10
Applications for Assistance 10
Applying for FEMA Individual Assistance 10
Applying for SBA Disaster Loans 11
Eligibility for SBA Disaster Loans 11
Eligibility for FEMA Individual Assistance 12
Eligibility for SBA-Dependent ONA 12
Appealing Eligibility and Assistance Determinations 15
FEMA Appeals 15
SBA Appeals 16
Policy Observations and Considerations 16
Computer Matching Agreement (CMA) and Duplication of Benefits (DOB) 16
SBA Income Test 19

Figures

Figure 1. FEMA and SBA Screening Process 14
Figure 2. Delivery Sequence 17

Figure B-1. SBA Memorandum 85-20 22

Tables

Table 1. Types of Housing Assistance and Other Needs Assistance 5
Table 2. SBA Income Test Table 14

Appendixes

Appendix A. Relevant Duplication of Benefits Statutory Authorities and Regulations 20
Appendix B. SBA Memorandum 85-20 22
Appendix C. FEMA and SBA Constituent Resources 23

Contacts

Author Information 24

Introduction

Individuals and households that suffer uninsured or underinsured losses caused by an *incident*[1] that results in an emergency or major disaster declaration typically apply for Individual Assistance (IA), administered by the Federal Emergency Management Agency (FEMA).[2] They may also apply for disaster loans, administered by the Small Business Administration (SBA).[3] This report opens with an overview of the two programs and a discussion about how declarations, including presidential declarations of emergency or major disaster under the Robert T. Stafford Disaster Relief and Emergency Assistance Act (Stafford Act; P.L. 93-288, as amended; 42 U.S.C. §§5121 et seq.), and SBA declarations under the Small Business Act (P.L. 83-163, as amended; 15 U.S.C. §§631 et seq.), are used to put them into effect. This report also discusses the application processes and eligibility criteria used by the SBA and FEMA to make loan and grant determinations, respectively. The report then describes the appeals processes, and concludes with policy observations and potential considerations for Congress about computer matching agreements, duplication of benefits, and the use of income tests as a screening device for SBA disaster loans and FEMA grants.

The SBA Disaster Loan Program and FEMA IA are interlaced to a certain degree. Functionally, the SBA and FEMA have a computer matching agreement (CMA) to share real-time data on assistance provided to applicants.[4] The SBA and FEMA use the interface between their systems to identify and prevent a duplication of benefits (DOB) because the SBA disaster loans and FEMA grants both provide assistance for damage to personal property, moving and storage expenses, and transportation assistance.[5] The CMA also helps determine loan and grant eligibility because, from an administrative perspective, eligibility and assistance from one source can impact eligibility and assistance from the other source.[6]

While the overlap between the two programs may have some benefits, it arguably also causes some confusion. Some say there are elements of the application process that are not entirely known or understood by those outside the agencies. For instance, some Members have asked for

[1] 44 C.F.R. §206.32(e) defines an *incident* as "[a]ny condition which meets the definition of major disaster or emergency as set forth in §206.2 which causes damage or hardship that may result in a Presidential declaration of a major disaster or an emergency."

[2] When an emergency or major disaster is declared, areas of the impacted state are "designated" as having been deemed eligible for federal assistance (44 C.F.R. §206.2(a)(6)). A *designated area* is "[a]ny emergency or major disaster-affected portion of a State which has been determined eligible for Federal assistance." Designated areas may include counties, parishes, or tribal lands, as well as municipalities, villages, or districts (Federal Emergency Management Agency (FEMA), *Individuals and Households Program Unified Guidance (IHPUG)*, FP 104-009-03, September 2016, p. 3, at https://www.fema.gov/media-library-data/1483567080828-1201b6eebf9fbbd7c8a070fddb308971/FEMAIHPUG_CoverEdit_December2016.pdf (hereinafter "FEMA, *IHPUG*"); FEMA, *Individual Assistance Program and Policy Guide (IAPPG)*, FP 104-009-03, March 2019, p. 5, at https://www.fema.gov/media-library-data/1551713430046-1abf12182d2d5e622d16accb37c4d163/IAPPG.pdf (hereinafter "FEMA, *IAPPG*")).

[3] For more information about Individual Assistance (IA), see CRS Report R45085, *FEMA Individual Assistance Programs: In Brief*, by Shawn Reese. For more information on SBA disaster loans, see CRS Report R41309, *The SBA Disaster Loan Program: Overview and Possible Issues for Congress*, by Bruce R. Lindsay; and CRS Report R44412, *SBA Disaster Loan Program: Frequently Asked Questions*, by Bruce R. Lindsay.

[4] U.S. Small Business Administration (SBA), "Computer Matching Agreement Between U.S. Small Business Administration and U.S. Department of Homeland Security, Federal Emergency Management Agency," 84 *Federal Register* 2649-2657, February 7, 2019, at https://www.govinfo.gov/content/pkg/FR-2019-02-07/pdf/2019-01508.pdf (hereinafter "SBA, 'Computer Matching Agreement'").

[5] SBA, "Computer Matching Agreement," 84 *Federal Register* 2651, February 7, 2019.

[6] SBA, "Computer Matching Agreement," 84 *Federal Register* 2650-2651, February 7, 2019.

clarification concerning the criteria used to determine eligibility for loans and/or grants, as well as how decisions are made with respect to whether an applicant is provided a loan, grant, or both. Others have questioned whether determinations are made on a case-by-case basis, or if the determination criteria are applied uniformly to all applicants seeking disaster assistance.

Overview of Programs

The following sections provide descriptions of the SBA and FEMA programs that provide assistance to individuals and households. In many cases, disaster survivors find that they need assistance from both programs in addition to other sources of assistance, including private insurance, state and local government assistance, and assistance from voluntary organizations, to fully recover.

SBA Home Disaster Loans

Homeowners, renters, and personal property owners located in a declared disaster area are eligible to apply for an SBA home disaster loan.[7] SBA home disaster loans can be conceptualized as two categories of loans according to how the proceeds are put to use: Personal Property Loans and Real Property Loans. These loans cover only uninsured or underinsured property and primary residences in a declared disaster area.

Personal Property Loans

A Personal Property Loan provides a creditworthy homeowner or renter located in a declared disaster area with up to $40,000 to repair or replace personal property owned by the disaster survivor.[8] Eligible items include furniture, appliances, clothing, and automobiles damaged or lost in a disaster. Eligibility of luxury items with functional use, such as antiques and rare artwork, is limited to the cost of an ordinary item meeting the same functional purpose. Interest rates for Personal Property Loans cannot exceed 8% per annum, or 4% per annum if the applicant is found by SBA to be unable to obtain credit elsewhere. Generally, borrowers pay equal monthly installments of principal and interest, beginning five months from the date of the loan. Loan maturities may be up to 30 years.

Real Property Loans

Real Property Loans provide creditworthy homeowners with uninsured or underinsured loss located in a declared disaster area with up to $200,000 to repair or replace the homeowner's primary residence to its predisaster condition.[9] The loans may not be used to upgrade a home or build additions to the home, unless the upgrade or addition is required by city or county building codes, such as a code-required elevation. Repair or replacement of landscaping and/or recreational facilities cannot exceed $5,000. A homeowner may borrow funds to cover the cost of improvements to protect their property against future damage (e.g., elevation, retaining walls, sump pumps, etc.). Mitigation funds may not exceed 20% of the disaster damage, as verified by

[7] SBA, "Disaster Loan Assistance: Federal Disaster Loans for Businesses, Private Nonprofits, Homeowners, and Renters, Home and Personal Property Loans," at https://disasterloan.sba.gov/ela/Information/HomePersonalPropertyLoans.

[8] 13 C.F.R. §123.105(a)(1).

[9] 13 C.F.R. §123.105(a)(2).

SBA, to a maximum of $200,000 for home loans.[10] As previously mentioned, interest rates cannot exceed 8% per annum, or 4% per annum if the applicant is unable to obtain credit elsewhere. Generally, borrowers pay equal monthly installments of principal and interest, beginning five months from the date of the loan. Loan maturities may be up to 30 years.

FEMA Individual Assistance

Various types of FEMA IA may be provided to disaster survivors, depending on whether an emergency or major disaster is declared, and the type(s) of IA requested by the governor of the affected state or the tribal chief executive and authorized by FEMA.[11] FEMA's IA program includes (1) Mass Care and Emergency Assistance, (2) the Crisis Counseling Assistance and Training Program, (3) Disaster Unemployment Assistance, (4) Disaster Legal Services, (5) Disaster Case Management, and (6) the Individuals and Households Program.[12] The Individuals and Households Program provides assistance to meet the housing and other needs of disaster survivors, and is the IA program that is often the subject of the most congressional interest. A brief description of each form of IA is included below.

Mass Care and Emergency Assistance

Mass Care and Emergency Assistance (MC/EA) involves the provision of life-sustaining services to disaster survivors prior to, during, and following an incident through short-term recovery.[13] MC/EA includes seven service "activities": (1) sheltering; (2) feeding; (3) distribution of emergency supplies; (4) support for individuals with disabilities and others with access and functional needs; (5) reunification services for adults and children; (6) support for household pets, service animals, and assistance animals; and (7) mass evacuee support.[14]

Crisis Counseling Assistance and Training Program

The Crisis Counseling Assistance and Training Program (CCP)[15] provides grant funding to eligible local, state, territorial, and Indian tribal governments, as well as nongovernmental organizations (e.g., a private mental health organization that the governor has designated to receive funds). CCP supplements efforts to assist individuals and communities with recovering from the effects of a disaster through community-based outreach and the provision of services,

---

[10] 13 C.F.R. §123.107.

[11] For additional information on the FEMA IA programs, see the FEMA, *IAPPG*; CRS Report RL31734, *Federal Disaster Assistance Response and Recovery Programs: Brief Summaries*, by Maria Kreiser, Maura Mullins, and Jared C. Nagel; CRS Report R45085, *FEMA Individual Assistance Programs: In Brief*, by Shawn Reese; FEMA, "FAQs: Current Process for Tribal Governments to Request a Presidential Declaration," at https://www.fema.gov/frequently-asked-questions-current-process-tribal-governments-request-presidential-declaration; FEMA, "The Disaster Declaration Process," at https://www.fema.gov/disaster-declaration-process (hereinafter FEMA, "The Disaster Declaration Process"); 44 C.F.R. §206.40(a); and for more information about the disaster declaration process, see CRS Report R43784, *FEMA's Disaster Declaration Process: A Primer*, by Bruce R. Lindsay.

[12] The Individuals and Households Program is the only form of IA that may be authorized under an emergency declaration; however, all forms of IA may be available following a declaration of major disaster. FEMA, "The Disaster Declaration Process."

[13] FEMA, *IAPPG*, p. 6.

[14] FEMA, *IAPPG*, p. 6.

[15] 42 U.S.C. §5183; 44 C.F.R. §206.171; FEMA, "Crisis Counseling Assistance and Training Program Fact Sheet," May 2018, at https://www.fema.gov/media-library-data/1528985113410-3a25afaac233c0ad90a0c377e29d7e73/CrisisCounselingProgram.pdf.

such as crisis counseling, psycho-education,[16] and coping skills development.[17] CCP also provides support by linking the disaster survivor with other resources, such as individuals and agencies that help survivors in the recovery process.[18] The program provides short- to intermediate-term assistance to support mental and emotional health needs; two CCP programs provide assistance for different lengths of time: (1) the Immediate Services Program provides funding for up to 60 days following a major disaster declaration; and (2) the Regular Services Program provides funding for up to 9 months from the notice of award.[19]

Disaster Unemployment Assistance

Disaster Unemployment Assistance (DUA) provides benefits to individuals who were previously employed or self-employed, were rendered jobless or whose employment was interrupted as a direct result of a major disaster, and are ineligible for regular unemployment insurance.[20] DUA may also provide reemployment assistance.[21] DUA benefits may continue for up to 26 weeks following the declaration of a major disaster.[22]

Disaster Legal Services

Disaster Legal Services (DLS) are provided for free to low-income individuals who require them as a result of a major disaster. The provision of services is "confined to the securing of benefits under the [Stafford] Act and claims arising out of a major disaster."[23] Assistance may include help with insurance claims, drawing up new wills and other legal documents lost in the disaster, help with home repair contracts and contractors, and appeals of FEMA decisions.[24] DLS is provided through an agreement with the American Bar Association's Young Lawyers Division.[25] Neither the statute nor the regulations establish cost-share requirements or time limitations for DLS.

---

[16] 44 C.F.R. §206.171(b)(5); 42 U.S.C. §5183. Psycho-educational service consists of therapeutic treatment for disaster survivors that provides information and support to help them better understand and cope with their situation (FEMA, *IAPPG*, p. 8). The FEMA *IAPPG* provides descriptions of the available services funded through the Crisis Counseling Assistance and Training Program (see FEMA, *IAPPG*, pp. 192-193).

[17] FEMA, *IAPPG*, p. 8.

[18] FEMA, *IAPPG*, p. 8.

[19] FEMA, *IAPPG*, p. 8.

[20] 44 C.F.R. §206.141; 42 U.S.C. §5177; FEMA, *IAPPG*, pp. 8-9, 222.

[21] FEMA, *IAPPG*, pp. 8, 222.

[22] 42 U.S.C. §5177; FEMA, *IAPPG*, p. 222; FEMA, "Disaster Unemployment Assistance Fact Sheet," May 2018, at https://www.fema.gov/media-library-data/1528984254955-49515ab3f8eeca0627f777a8abe4347a/DisasterUnemploymentAssistance.pdf. For more information on disaster unemployment assistance, see CRS Report RS22022, *Disaster Unemployment Assistance (DUA)*, by Julie M. Whittaker.

[23] 44 C.F.R. §206.164(e); 42 U.S.C. §5182.

[24] 42 U.S.C. §5182; 44 C.F.R. §206.164; FEMA, *IAPPG*, p. 8; FEMA, "Disaster Legal Services Fact Sheet," April 2019, at https://www.fema.gov/media-library-data/1565183972050-1b178d085b84dd8949d4f8a1bdf8b2f2/FACTSHEET_DisasterLegalServicesFINAL2019Compliant.pdf.

[25] FEMA, *IAPPG*, p. 8.

Disaster Case Management

The Disaster Case Management (DCM) program partners case managers with disaster survivors to develop and implement disaster recovery plans that address their unmet needs.[26] The program is time-limited, and shall not exceed 24 months from the date of the major disaster declaration.[27]

Individuals and Households Program

The Individuals and Households Program (IHP) is the primary vehicle for FEMA assistance to individuals and households after the President issues an emergency or major disaster declaration, when authorized.[28] It is intended to meet basic needs and support recovery efforts, but it cannot compensate disaster survivors for all losses.[29] Under the IHP, financial assistance (i.e., funding provided to an applicant) and/or direct assistance (i.e., assistance provided by FEMA/state/territorial/Indian tribal government) may be available to eligible individuals and households who have uninsured or underinsured necessary expenses and serious needs, as a result of a disaster, that cannot be met through other means or forms of assistance.[30] There are two categories of IHP assistance: Housing Assistance, and Other Needs Assistance (ONA) (see **Table 1** for the subcategories of Housing Assistance and ONA). The period of assistance is generally limited to 18 months following the date of the emergency or major disaster declaration.[31]

Table 1. Types of Housing Assistance and Other Needs Assistance

Housing Assistance: Financial	Housing Assistance: Direct	ONA: SBA-Dependent	ONA: Non-SBA-Dependent
Lodging Expense Reimbursement Rental Assistance Home Repair Assistance Home Replacement Assistance	Multifamily Lease and Repair Transportable Temporary Housing Units Direct Lease Permanent Housing Construction	Personal Property Moving and Storage Transportation Assistance Group Flood Insurance Policy	Funeral Assistance Medical and Dental Assistance Childcare Assistance Assistance for Miscellaneous Items Critical Needs Assistance Clean and Removal Assistance

Source: FEMA, *Individual Assistance Program and Policy Guide (IAPPG)*, FP 104-009-03, March 2019, p. 7, at https://www.fema.gov/media-library-data/1551713430046-1abf12182d2d5e622d16accb37c4d163/IAPPG.pdf.

Notes: The different types of Housing Assistance may constitute either financial or direct assistance; however, all types of ONA are forms of financial assistance.

[26] 42 U.S.C. §5189d. Disaster recovery plans include "resources, decision-making priorities, providing guidance, and tools to assist disaster survivor" (FEMA, *IAPPG*, p. 7).

[27] FEMA, "Disaster Case Management Fact Sheet," April 2019, at https://www.fema.gov/media-library-data/1565183762458-bddf628680d4470b1a260b7c2ee8d51d/FACTSHEET_DisasterCaseManagementFINAL2019Compliant.pdf.

[28] FEMA, "The Disaster Declaration Process." Note that IHP is the only form of IA that may be authorized under an emergency declaration.

[29] 44 C.F.R. §§206.110 et seq.; 42 U.S.C. §5174; FEMA, *IAPPG*, p. 6.

[30] 42 U.S.C. §5174; 44 C.F.R. §206.110(a); see also FEMA, *IAPPG*, p. 6.

[31] FEMA, *IAPPG*, p. 6.

Housing Assistance

Housing Assistance may include financial or direct assistance, including the following:

- **Lodging Expense Reimbursement (LER)** for hotels, motels, or other short-term lodging;
- **Rental Assistance** for alternate housing accommodations while the applicant is displaced from their primary residence;
- **Home Repair Assistance** for an owner-occupied primary residence;
- **Replacement Assistance** for an owner-occupied primary residence when the residence is destroyed;
- **Multifamily Lease and Repair (MLR)** to place disaster survivors in FEMA-leased multifamily temporary housing;
- **Transportable Temporary Housing Units (TTHUs)**[32] to place disaster survivors in FEMA-purchased or -leased temporary housing units;
- **Direct Lease** to place disaster survivors in FEMA-leased residential properties; and
- **Permanent Housing Construction (PHC)** to provide home repair and construction services in insular areas outside the continental United States and other locations where no alternative housing resources are available and where types of FEMA housing assistance that are normally provided (such as rental assistance) are unavailable, infeasible, or not cost-effective.[33]

In addition to IHP temporary housing assistance, FEMA may provide short-term, emergency sheltering accommodations under Section 403—Essential Assistance—of the Stafford Act (e.g., the Transitional Sheltering Assistance [TSA] program, which provides short-term hotel/motel accommodations to disaster survivors).[34]

Other Needs Assistance (ONA)

ONA provides financial assistance for other disaster-related necessary expenses and serious needs. There are two categories of ONA: (1) SBA-dependent, and (2) non-SBA-dependent.

SBA-Dependent ONA

FEMA and the SBA collaborate in determining applicant eligibility for SBA-dependent ONA.[35] To receive SBA-dependent types of ONA, applicants must first apply for an SBA disaster loan.[36] SBA-dependent ONA is only available to individuals or households who do not qualify for an SBA disaster loan or whose SBA disaster loan amount is insufficient. Types of SBA-Dependent ONA include the following:

- **Personal Property Assistance** to repair or replace eligible items (i.e., appliances, essential clothing, furnishings, accessibility items as defined by the Americans

[32] Examples of Transportable Temporary Housing Units (TTHUs) include Recreational Vehicles (RVs) and Manufactured Housing Units (MHUs).

[33] FEMA, *IAPPG*, pp. 44-45.

[34] 42 U.S.C. §5170b. Note that Stafford Act Section 403 assistance is not the focus of this report.

[35] SBA, "Computer Matching Agreement," 84 *Federal Register* 2651, February 7, 2019.

[36] SBA, "Computer Matching Agreement," 84 *Federal Register* 2651, February 7, 2019.

with Disabilities Act, and essential, specialized tools and equipment required by an employer or education);[37]

- **Transportation Assistance** to repair or replace a vehicle damaged by a disaster and cover other transportation-related costs;[38]
- **Moving and Storage Assistance** to relocate and store personal property from the damaged primary residence while repairs are made, and return the property to the repaired primary residence;[39] and
- **Group Flood Insurance Policy** to enable FEMA or the state, territorial, or Indian tribal government to pay $600 for three years of flood insurance for real and personal property through the National Flood Insurance Program (NFIP).[40]

Non-SBA-Dependent ONA

Non-SBA-dependent types of ONA may be awarded regardless of the individual or household's SBA disaster loan status and may include the following:

- **Funeral Assistance** for expenses incurred as a direct result of a declared emergency or major disaster (e.g., interment or reinterment, officiant services, and death certificates);[41]
- **Medical and Dental Assistance** for expenses caused by a declared emergency or major disaster (e.g., injury, illness, loss of prescribed medication and equipment, and insurance deductibles and copayments);[42]
- **Childcare Assistance** in the form of a one-time payment that covers up to eight cumulative weeks of child care expenses to care for children aged 13 and under, and/or children up to age 21 with a disability as defined by federal law who need assistance with activities of daily living;[43]
- **Miscellaneous Expenses** to provide reimbursement for eligible items purchased or rented after a major disaster to assist with recovery, such as gaining access to the property or assisting with cleaning efforts (e.g., chainsaw, dehumidifier, etc.);[44]
- **Critical Needs Assistance** in the form of a one-time payment of $500 to individuals or households who need life-saving and life-sustaining items because they are displaced from their primary dwelling as a result of a disaster;[45] and

[37] FEMA, *IAPPG*, pp. 152-153.

[38] FEMA, *IAPPG*, pp. 155-156.

[39] FEMA, *IAPPG*, p. 158.

[40] FEMA, *IAPPG*, p. 159; 44 C.F.R. §206.119(c)(6)(i) and (d)(2).

[41] FEMA, *IAPPG*, pp. 137-139.

[42] FEMA, *IAPPG*, pp. 140-141.

[43] FEMA, *IAPPG*, pp. 143-144.

[44] FEMA, *IAPPG*, p. 148; FEMA, "Individuals and Households Program Fact Sheet," May 2018, at https://www.fema.gov/media-library-data/1528984381358-6f256cab09bfcbe6747510c215445560/IndividualsHouseholdsPrograms.pdf.

[45] FEMA's *IAPPG* provides a nonexclusive list of life-saving and life-sustaining items including "water, food, first aid, prescriptions, infant formula, diapers, consumable medical supplies, DME [durable medical equipment], personal hygiene items, and fuel for transportation." FEMA, *IAPPG*, p. 150.

- **Clean and Removal Assistance** in the form of a one-time payment to address floodwater contamination for individuals and households whose primary residences experienced flood damage.[46]

Maximum Amount of IHP Financial Assistance

The amount of IHP financial assistance an individual or household may receive is limited. Housing assistance may not exceed $34,900 (FY2019; adjusted annually),[47] and separate from that, financial assistance for ONA also may not exceed $34,900 (FY2019; adjusted annually).[48] In addition, financial assistance to rent alternate housing accommodations is not subject to the cap.[49] Households may need both IHP assistance and an SBA disaster loan to repair or rebuild their home, or meet other disaster-caused needs.

Stafford Act and SBA Disaster Declarations, and Designations

Two declaration authorities put FEMA IA and the SBA Disaster Loan Program into effect: (1) the Stafford Act and (2) the Small Business Act.

Stafford Act Declarations

The Stafford Act authorizes the President to issue major disaster declarations[50] that provide local, state, territorial, and Indian tribal governments with a range of federal assistance in response to

[46] Clean and Removal Assistance is "limited to a fixed amount calculated based on the average cost of cleaning, sanitizing, and removing carpet in the geographic area." FEMA, *IAPPG*, p. 151.

[47] FEMA, "Notice of Maximum Amount of Assistance Under the Individual sand Households Program," 83 *Federal Register* 53281, October 22, 2018, at https://www.govinfo.gov/content/pkg/FR-2018-10-22/pdf/2018-22884.pdf. The maximum amount of assistance is adjusted annually to reflect changes in the Consumer Price Index for All Urban Consumers published by the Department of Labor (§408(h)(3) of the Stafford Act, P.L. 93-288, as amended; 42 U.S.C. §5174).

[48] §1212 of DRRA, P.L. 115-254. The Disaster Recovery Reform Act of 2018 (DRRA, Division D of P.L. 115-254) amended the provision of housing assistance and ONA under Stafford Act Section 408—Federal Assistance to Individuals and Households by creating separate caps of equal amounts for housing assistance and ONA. Prior to the enactment of the DRRA, an individual or household could receive up to $33,300 (FY2017; adjusted annually) in financial assistance, which included both housing assistance and ONA (FEMA, "Notice of Maximum Amount of Assistance Under the Individuals and Households Program," 81 *Federal Register* 70431, October 12, 2016, at https://www.govinfo.gov/content/pkg/FR-2016-10-12/pdf/2016-24626.pdf; 42 U.S.C. §5174(h) (see versions from 2017 and prior), at https://www.govinfo.gov/content/pkg/USCODE-2017-title42/pdf/USCODE-2017-title42-chap68-subchapIV-sec5174.pdf).

[49] §1212 of DRRA, P.L. 115-254. Prior to DRRA's enactment, financial assistance to rent alternate accommodations was also subject to the maximum amount of financial assistance (§1212 of DRRA, P.L. 115-254). Note that the exclusion from the cap applies to both Lodging Expense Reimbursement (LER) and Rental Assistance (including Initial Rental Assistance and Continued Rental Assistance). Memorandum from Christopher B. Smith, Individual Assistance Division Director, to Regions I-X Regional Administrators, "Policy Changes to the Individuals and Households Program resulting from the Disaster Recovery Reform Act of 2018, Section 1212," March 25, 2019, last accessed July 8, 2019, at https://www.fema.gov/media-library-data/1557238500138-2c015fa2d9c8d73935ea392520d6a068/Chris_Signature_DRRA_1212_Memo_32519.pdf.

[50] The President may also issue emergency declarations, which provide federal assistance; however, only Public Assistance Categories A (debris removal) and B (emergency protective measures), and the Individual Assistance Individuals and Households Program, may be available following an emergency declaration (FEMA, "The Disaster Declaration Process"). Additionally, SBA disaster loans for individuals and households are only available following a

natural and human-caused incidents.[51] Each presidential major disaster declaration includes a "designation" listing the counties eligible for assistance, as well as the types of assistance FEMA is to provide under the declaration.[52] Potential types of assistance include (1) Public Assistance (PA) for emergency protective measures, debris removal, and repair or replacement of damaged public infrastructure;[53] (2) Hazard Mitigation Grant Program (HMGP) grants to fund projects to lessen the effects of future disaster incidents; and (3) Individual Assistance (IA) to provide housing and other needs assistance to individuals and households. Under FEMA regulations:

> The Assistant Administrator for the Disaster Assistance Directorate has been delegated authority to determine and designate the types of assistance to be made available. The initial designations will usually be announced in the declaration. Determinations by the Assistant Administrator for the Disaster Assistance Directorate of the types and extent of FEMA disaster assistance to be provided are based upon findings whether the damage involved and its effects are of such severity and magnitude as to be beyond the response capabilities of the state, the affected local governments, and other potential recipients of supplementary federal assistance. The Assistant Administrator for the Disaster Assistance Directorate may authorize all, or only particular types of, supplementary federal assistance requested by the governor.[54]

Not all major disaster declarations provide IA. Often, major declarations only provide PA and HMGP (these are sometimes referred to as "PA-only" major disaster declarations).

Stafford Act major disaster declarations also trigger the SBA Disaster Loan Program.[55] The assistance designation, however, determines what loan types become available. In particular, the IA designation is important because it determines whether SBA disaster loans will be made available to individuals and households. For example, if the President declares a major disaster and designates IA for a county, then all SBA disaster loan types become available to that county.[56] On the other hand, if the President issues a PA-only major declaration, SBA disaster loans are generally only available to private nonprofit organizations. In many cases, a major disaster is declared for an incident that designates IA for some counties, and designates PA for others. Only counties authorized to receive IA pursuant to a major disaster declaration are eligible for SBA home disaster loans.

Presidential declaration of a major disaster when IA is authorized.

[51] For more information on major disaster declarations, see CRS Report R43784, *FEMA's Disaster Declaration Process: A Primer*, by Bruce R. Lindsay; and CRS Report R42702, *Stafford Act Declarations 1953-2016: Trends, Analyses, and Implications for Congress*, by Bruce R. Lindsay.

[52] When an emergency or major disaster is declared, areas of the impacted state are "designated" as having been deemed eligible for federal assistance (44 C.F.R. §206.2(a)(6)). A *designated area* is "[a]ny emergency or major disaster-affected portion of a State which has been determined eligible for Federal assistance." Designated areas may include counties, parishes, or tribal lands, as well as municipalities, villages, or districts (FEMA, *IHPUG*, p. 3; FEMA, *IAPPG*, p. 5).

[53] For more information on Public Assistance (PA), see CRS Report R43990, *FEMA's Public Assistance Grant Program: Background and Considerations for Congress*, by Jared T. Brown and Daniel J. Richardson.

[54] 44 C.F.R. §206.40(a).

[55] 13 C.F.R. §123.3(a)(1).

[56] Contiguous counties are eligible for Economic Injury Disaster Loans (EIDLs). FEMA assistance is not provided to contiguous counties—only those counties designated in the declaration. The loan types are home disaster loans (Personal Property Loans and Real Property Loans), which are discussed in this report, and business disaster loans (Business Physical Disaster Loans and Economic Injury Disaster Loans).

SBA Disaster Declarations

SBA disaster loans can also be triggered by the SBA Administrator, who is authorized under the Small Business Act to issue an "Agency" or "SBA declaration" that makes SBA disaster loans available for homeowners, renters, businesses, and nonprofit organizations.[57] The SBA declaration by itself does not, however, trigger FEMA IA.[58]

Applications for Assistance

The following sections describe the application process for FEMA and SBA disaster loan assistance. They include a discussion concerning eligibility criteria for the two programs in addition to a description of how applicants are screened to determine whether the applicant should be provided a grant, a loan, or both. Although integrated to a large extent, ultimately each agency is responsible for determining eligibility based on the applicant's losses and the forms of assistance they have received.

Applying for FEMA Individual Assistance

Applicants in a declared disaster area may register for FEMA IA and SBA disaster loan assistance after a major disaster declaration has been issued and IA has been designated. Individuals and households can register for assistance online, by telephone, or in-person at a Disaster Recovery Center (DRC).[59] Individuals and households generally have 60 days from the date of a declaration to apply for FEMA IHP assistance.[60] The registration process requires the following information:

- certification that the applicant is a U.S. citizen, noncitizen national, a qualified alien, or the parent or guardian of a minor who is a U.S. citizen, noncitizen national, or qualified alien;[61]
- the primary applicant's social security number (or the social security number of a minor child in the household who is a U.S. citizen, noncitizen national, or qualified alien if the parent or legal guardian is not a legal citizen);
- current and predisaster address;
- names of predisaster household occupants;
- contact information;
- insurance information;
- financial information (i.e., predisaster household annual gross income);
- losses caused by the disaster; and

[57] The criteria used to determine whether to issue a declaration include a minimum amount of uninsured physical damage to buildings, machinery, inventory, homes, and other property. Generally, this minimum is at least 25 homes or businesses (or some combination of the two) that have sustained uninsured losses of 40% or more in any county or other smaller political subdivision of a state or U.S. possession. See 13 C.F.R. §123.3(a)(3)(i) and 13 C.F.R. §123.3(a)(3)(ii).

[58] Under an SBA declaration, applicants apply directly to SBA for disaster loans. The CMA with FEMA is not used in these situations.

[59] FEMA, *IAPPG*, p. 68. See **Appendix C** of this report for more information.

[60] FEMA, *IAPPG*, p. 69.

[61] FEMA, *IAPPG*, p. 70.

- banking information for direct deposit of financial assistance.[62]

Other forms of IA include other application requirements and processes.[63] For example, local, state, territorial, or Indian tribal governments may apply for a grant to administer the Crisis Counseling Assistance and Training Program, which includes different application requirements.[64] The provision of Disaster Legal Services, however, only requires the affected state, territorial, or Indian tribal government to request the program through the "Request for Presidential Disaster Declaration—Major Disaster or Emergency" form (FEMA Form 010-0-13), and there is no formal application process for individuals and households to access Disaster Legal Services once the government activates the program.[65]

Applying for SBA Disaster Loans

Applicants can apply for SBA disaster loans online, in-person at a DRC, or by mail.[66] Applicants must fill out SBA Form 5C and IRS Form 4506-T.[67] The forms require information about the applicant, including their social security number, income, insurance, assets, debt amounts, and tax information. The applicant may also be required to indicate whether their employment has changed in the last two years, as well as provide deed and proof of residency information. If the applicant is claiming automobile damage they may be required to provide proof of ownership (e.g., a copy of the registration, title, bill of sale).

Eligibility for SBA Disaster Loans

In the case of SBA disaster loans, the SBA's Office of Disaster Assistance (ODA) determines eligibility based on the applicant's disaster-related losses, as verified by the SBA.[68] According to the SBA, three main criteria are used for making credit decisions: (1) eligibility, which is based on the applicant's disaster-related losses; (2) satisfactory credit; and (3) repayment ability, including minimum income levels. The SBA would not decline an application for not having collateral to secure a loan but, to the extent it is available, a borrower may be required to pledge collateral for loans over certain amounts (e.g., $25,000 for physical damage loans).[69]

---

[62] FEMA, *IAPPG*, p. 71.

[63] For example, the process by which individuals seek Disaster Unemployment Assistance depends on the requirements set forth by the state/territory unemployment insurance (UI) agency because the state/territory UI agency administers the program, when it is authorized. There are timely application requirements, as well as requirements that the application provide proof of employment/self-employment/or work that was to begin on or after the first day of the incident period; applicants must also satisfy conditions of eligibility (see the "Eligibility for FEMA Individual Assistance" section below). FEMA, *IAPPG*, pp. 222-224.

[64] The Crisis Counseling Assistance and Training Program includes two types of assistance, which are separate federal award programs: (1) Immediate Services Program (ISP); and (2) Regular Services Program (RSP). Both include different application requirements. For information on the ISP application requirements, see FEMA, *IAPPG*, pp. 195-200. For information on the RSP application requirements, see FEMA, *IAPPG*, pp. 204-208.

[65] FEMA, *IAPPG*, p. 220.

[66] See **Appendix C** of this report for more information. See also SBA, "The Three Step Process: Disaster Loans," August 2018, at https://disasterloan.sba.gov/ela/Documents/Three_Step_Process_SBA_Disaster_Loans.pdf.

[67] See https://www.sba.gov/sites/default/files/articles/f4506-t-2015-09-00.pdf.

[68] Generally, based on the amount of disaster damages, minus any assistance received from insurance, FEMA grants, or other sources of recovery.

[69] Small Business Administration, *SBA Disaster Loan Program: Frequently Asked Questions*, August 31, 2017, p. 7, at https://www.sba.gov/sites/default/files/articles/sba-disaster-loans-faq.pdf.

Eligibility for FEMA Individual Assistance

In the case of IA, each form of assistance includes general conditions of eligibility, which are outlined in FEMA's *Individual Assistance Program and Policy Guide* (*IAPPG*).[70] For example, FEMA IHP assistance includes general conditions of eligibility as follows:

- the applicant must be a U.S. citizen, noncitizen national, or qualified alien (or the parent or guardian of a minor child who is a U.S. citizen, noncitizen national, or qualified alien);
- FEMA must be able to verify the applicant's identity;
- the applicant's insurance, or other forms of disaster assistance received, cannot meet their disaster-caused needs; and
- the applicant's necessary expenses and serious needs are directly caused by a declared disaster.[71]

In addition, each category of FEMA IHP assistance includes additional eligibility requirements (e.g., to receive ONA, an applicant must satisfy occupancy and ownership eligibility requirements).[72]

The standard mechanism for verifying IHP loss and eligibility is an on-site inspection conducted by a FEMA inspector (or other method of verification, such as a geospatial inspection or a review of documentation for losses that cannot be verified through an inspection).[73]

Eligibility for SBA-Dependent ONA

As stated above, FEMA and the SBA collaborate in determining applicant eligibility for ONA (see the "Other Needs Assistance (ONA)" section).[74] There are two pathways for individuals and households to be considered for SBA-Dependent ONA: (1) FEMA refers applicant registrations to the SBA Disaster Loan Program if an applicant's income meets the SBA minimum guidelines (described below); or (2) FEMA considers the applicant for SBA-dependent ONA assistance if the applicant's income does not meet the SBA's minimum threshold (in which case FEMA does

[70] Each category of IHP assistance (see **Table 1**) includes conditions of eligibility and associated, required documentation, as outlined in the *IAPPG*. For example, in order for a nonfederal entity to receive an award to administer Disaster Case Management (DCM) assistance: (1) the President must declare a major disaster; (2) the need for DCM services must be beyond the capabilities of the local, state, territorial, or Indian tribal government to provide; (3) the award package must be submitted within 90 days of the declaration; and (4) the governor or governor's authorized representative, tribal chief executive, or nonfederal entity must be authorized to receive the award in the FEMA-State Agreement (FEMA, *IAPPG*, pp. 177-178). The Crisis Counseling Assistance and Training Program includes similar requirements, such as: (1) the declaration requirement; (2) the requirement that the need exceed the capability of the local, state, territorial, or Indian tribal government to provide; and (3) that the application is timely, etc. (FEMA, *IAPPG*, p. 193). Similar to IHP assistance, Disaster Unemployment Assistance includes requirements such as (1) being a U.S. citizen, noncitizen national, or qualified alien; (2) providing proof of identity; (3) being unemployed/partially employed as a direct result of a major disaster; (4) being available for work and not having refused an offer of suitable employment; (5) being ineligible for regular unemployment insurance; and (6) filing timely (FEMA, *IAPPG*, p. 224). The provision of Disaster Legal Services, however, merely requires the applicant to be directly affected by a declared disaster, meet the definition of low-income, and lack the means to hire an attorney (FEMA, *IAPPG*, p. 219).

[71] FEMA, *IAPPG*, pp. 47-48.

[72] FEMA, *IAPPG*, p. 47.

[73] FEMA, *IAPPG*, p. 72.

[74] SBA, "Computer Matching Agreement," 84 *Federal Register* 2651, February 7, 2019; FEMA, *IAPPG*, p. 133.

not refer the applicant's registration to the SBA).[75] The general process for determining eligibility is outlined in **Figure 1** and described in more detail below.

Based on income information provided as part of the FEMA registration process, FEMA applies an income test developed by SBA for its initial applicant screening (see stage 2 of **Figure 1**).[76] The SBA developed the minimum income levels or "minimum cost of living estimates" by applying a formula to the U.S. Department of Health and Human Services Federal Poverty Guidelines.[77] FEMA automatically refers applicant registrations to the SBA Disaster Loan Program if an applicant's income meets the SBA minimum guidelines (see stage 3 of **Figure 1**).[78] As shown in **Table 2**, the SBA establishes minimum income levels by multiplying the poverty level for a family of one by a factor of 1.5, and multiplying the poverty level for families of greater than one by a factor of 1.25.[79] The income test formula is not specifically authorized in statute and is not published in SBA regulations. Rather, the formula was first introduced as agency policy in 1985 by SBA Memorandum 85-20 as a means to help determine the applicant's ability to repay the loan and is still in use today (see **Appendix B**).

SBA disaster loan applicants with income below the minimum income level are classified as Failed Income Test (FIT). FIT applicants are notified that their SBA disaster loan application has been denied and advised that they will be notified if there are any changes to the decision.[80] Additionally, if the SBA denies the applicant or the loan amount is insufficient to meet their recovery needs, the applicant would be referred back to FEMA to be considered for SBA-dependent ONA assistance (see stage 5 of **Figure 1**).[81]

[75] SBA, "Computer Matching Agreement," 84 *Federal Register* 2651, February 7, 2019.

[76] FEMA, *IAPPG*, p. 133.

[77] The poverty guidelines are updated on a yearly basis. The U.S. Department of Health and Human Services Federal Poverty Guidelines are available at https://aspe.hhs.gov/poverty-guidelines. They are also posted in the *Federal Register*: U.S. Department of Health and Human Services (HHS), "Annual Update of the HHS Poverty Guidelines," 84 *Federal Register* 1167-1168, February 1, 2019, at https://www.govinfo.gov/content/pkg/FR-2019-02-01/pdf/2019-00621.pdf.

[78] FEMA automatically refers applicants that meet or exceed certain income levels based on the SBA minimum guidelines to the SBA Disaster Loan Program because SBA disaster loans come before ONA in the sequence of delivery of assistance, which is intended to prevent duplication of benefits pursuant to 44 C.F.R. §206.191(d). For example, it could be inferred that an individual who earns $18,210 or more per year would initially be referred to the SBA Disaster Loan Program to apply for an SBA disaster loan to repair and rebuild their home (see stage 2 of **Figure 1**). See also SBA, "Computer Matching Agreement," 84 *Federal Register* 2651, February 7, 2019; see also FEMA, *IAPPG*, p. 133.

[79] Minimum income includes wages, alimony, child support payments, interest and dividend income from savings, retirement, pension, social security, or disability payments.

[80] SBA, Office of Disaster Assistance, SOP 50 30 6, at https://www.sba.gov/sites/default/files/SOP%2050%2030%207.pdf.

[81] SBA, "Computer Matching Agreement," 84 *Federal Register* 2651, February 7, 2019.

Figure 1. FEMA and SBA Screening Process

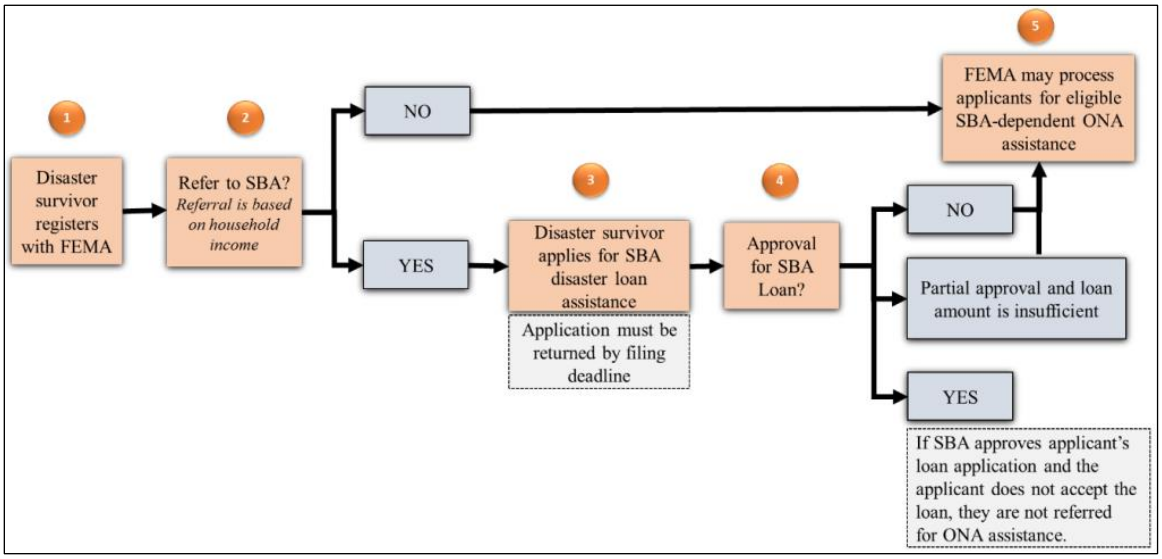

Source: Federal Emergency Management Agency, *Individual Assistance Program and Policy Guide* (*IAPPG*), FP 104-009-03, March 2019, p. 133, at https://www.fema.gov/media-library-data/1551713430046-1abf12182d2d5e622d16accb37c4d163/IAPPG.pdf.

Note: Other Needs Assistance (ONA) provides financial assistance for other disaster-related expenses and needs.

Table 2. SBA Income Test Table

(Poverty Threshold Formula)

Number of Persons in Family/Household	HHS Poverty Guidelines for 2019	SBA Income Threshold
1	$12,490	$18,735
2	$16,910	$21,138
3	$21,330	$26,663
4	$25,750	$32,188
5	$30,170	$37,713
6	$34,590	$43,238
7	$39,010	$48,763
8	$43,430	$54,288

Notes: Amounts have been rounded (to the nearest dollar).

Source: Based on CRS interpretation of U.S. Department of Health and Human Services, *U.S. Federal Poverty Guidelines Used to Determine Financial Eligibility for Certain Federal Programs*, Washington, DC, at https://aspe.hhs.gov/poverty-guidelines; and formula applied in SBA Memorandum 85-20: Bernard Kulik, Deputy Associate Administrator for Disaster Assistance, U.S. Small Business Administration, *Income Test Tables:*, SBA Memorandum 85-20, June 13, 1985.

Appealing Eligibility and Assistance Determinations

FEMA Appeals

Applicants for IA assistance—using the IHP as an example—may appeal FEMA's determinations, including related to eligibility;[82] amount and/or types of assistance;[83] FEMA recoupment of improper payments;[84] and denials of late application submissions.[85] Applicants may also appeal decisions related to the specific type of IHP assistance they are receiving (e.g., a denial for Continued Rental Assistance, a denial of a request to purchase a FEMA-provided Mobile Housing Unit, etc.).[86]

Appeals of any IHP assistance-related FEMA determination must be submitted in writing. However, "FEMA does not accept multiple appeals for the same reason, but may have to request additional information and conduct additional reviews as new information is received."[87] Appeals must explain the reason for the appeal, and should include documentation supporting the appeal

[82] "Applicants must appeal initial eligibility determinations within 60 days of the date on their eligibility notification letter." FEMA, *IAPPG*, p. 65.

[83] For example, following an extension of the period of assistance, FEMA may charge rent if occupants remain in or maintain possession of a FEMA Temporary Housing Unit—a form of Direct Temporary Housing Assistance, and rent is based on the Fair Market Rent (FMR). Applicants may appeal decisions related to the amount of rent established by FEMA within 60 days of receiving FEMA's notice of the requirement to pay monthly rent. "Appeals must include documentation demonstrating the applicant does not have the financial ability to pay the established rent. Specifically, FEMA requires both of the following information: [1] Pre-disaster versus post-disaster monthly gross income of all household occupants age 18 or older; and [2] Pre-disaster versus post-disaster monthly housing costs, such as mortgage payments on the pre-disaster residence while it is being repaired." FEMA, *IAPPG*, p. 101.

[84] FEMA is responsible for identifying and recovering improper payments. §2(d)(2) of the Improper Payments Information Act of 2002 (IPIA, P.L. 107-300) defines *improper payments* as "any payment that should not have been made or that was made in an incorrect amount (including overpayments and underpayments) ... and includes any payment to an ineligible recipient, any payment for an ineligible service, any duplicate payment.... " For more information, see CRS Report R45257, *Improper Payments in High-Priority Programs: In Brief*, by Garrett Hatch. Applicable federal laws include the Debt Collection Improvement Act of 1996 (DCIA), IPIA, Improper Payments Elimination and Recovery Act of 2010 (IPERA), and Improper Payments Elimination and Recovery Improvement Act of 2012 (IPERIA). If FEMA seeks to recover improper payments provided to individuals and households, the applicant may submit a written appeal or oral hearing request within 60 days of the date on the FEMA potential debt notification letter (FEMA, *IAPPG*, pp. 164-167). Additionally, Section 1216(a) of the Disaster Recovery Reform Act of 2018 (DRRA, Division D of P.L. 115-254) allows FEMA to waive debts owed to the United States related to assistance provided under Stafford Act Section 408—Federal Assistance to Individuals and Households, and DRRA Section 1216(b) may restrict FEMA's ability to recoup assistance provided under Stafford Act Section 408.

[85] FEMA, *IAPPG*, p. 65.

[86] FEMA, *IAPPG*, p. 65.

[87] FEMA, *IAPPG*, pp. 65 and 75. Appeals may be submitted via mail or fax. Note also that appeals related to ONA that are administered under the Joint or State Option must be submitted to the state, territorial, or Indian tribal government. FEMA's regulation on the provision of ONA requires a state, territorial, or Indian tribal government to select one of three options for administration of the ONA: the FEMA Option, the Joint Option, or the State, Territorial or Indian Tribal Government Option. Under the FEMA Option, FEMA is responsible for all tasks associated with the administration of ONA. Under the State, Territorial, or Indian Tribal Government Option, FEMA provides ONA as a grant to the state, territorial, or Indian tribal government, which administers ONA. Under the Joint Option, the state, territorial, or Indian tribal government administers ONA jointly with FEMA, splitting responsibilities for various administrative tasks (44 C.F.R. §206.120; FEMA, *IAPPG*, p. 135).

request.[88] They must also be signed by the applicant (or person they have authorized to act on his/her behalf).[89] Once FEMA receives an appeal, the agency will either (1) contact the applicant to request additional information with a deadline of 30 days; (2) contact a third party to verify the supporting documentation; and/or (3) schedule an appeal inspection.[90] FEMA's appeal determinations are provided to the applicant within 90 days of receiving the written appeal letter, and the decision is final.[91]

IA applicants can also include local, state, territorial, and Indian tribal governments. For example, these nonfederal entities may appeal FEMA's decision to deny an application to provide Disaster Case Management (DCM) or the Crisis Counseling Assistance and Training Program (CCP). In these cases, the nonfederal entity must submit a written appeal to the IA Division Director (IADD) within 60 days of the date of the application decision,[92] and the appeal must include additional information that was not included in the original application (e.g., a new budget and associated training and implementation plans) in the case of DCM,[93] or information justifying a reversal of the decision in the case of CCP.[94] Nonfederal entity applicants may also appeal other FEMA decisions, such as appeals related to disallowed costs or termination of approved DCM prior to the end of the period of performance.[95]

SBA Appeals

SBA disaster loan applicants have six months to request a reconsideration of an SBA decline and have 30 days to appeal a subsequent SBA decline decision.[96]

Policy Observations and Considerations

Computer Matching Agreement (CMA) and Duplication of Benefits (DOB)

Following a major disaster, homeowners and businesses may have access to a number of resources to assist in the response, recovery, and rebuilding process. The range of resources include insurance payouts, state and local government assistance, charitable donations from private institutions and individuals, as well as certain forms of federal assistance. In addition to FEMA and SBA disaster assistance, individuals and households may be eligible for the Department of Housing and Urban Development's (HUD's) Community Development Block Grant Disaster Recovery (CDBG-DR) program.[97] Compensation from multiple sources that

[88] FEMA, *IAPPG*, p. 67.

[89] FEMA, *IAPPG*, p. 66.

[90] FEMA, *IAPPG*, p. 67.

[91] FEMA, *IAPPG*, p. 67.

[92] FEMA, *IAPPG*, pp. 185 and 217.

[93] FEMA, *IAPPG*, p. 185.

[94] FEMA, *IAPPG*, p. 217.

[95] FEMA, *IAPPG*, pp. 185 and 217.

[96] 13 C.F.R. §123.13(e).

[97] For more information on the Community Development Block Program, see CRS Report R43520, *Community Development Block Grants and Related Programs: A Primer*, by Eugene Boyd; CRS Report RL33330, *Community Development Block Grant Funds in Disaster Relief and Recovery*, by Eugene Boyd; and CRS Report R43394,

exceeds the total loss amount is generally considered a duplication of benefits.[98] When duplication occurs, the recipient is liable to the United States to pay back the duplicated benefit.[99]

Section 312 of the Stafford Act requires federal agencies to ensure that individuals (and businesses) do not receive disaster assistance for losses for which they have already been compensated or may expect to be compensated.[100] The uniformity requirement set forth in Section 312 is located in FEMA regulation 44 C.F.R. §206.191, which establishes a delivery sequence of disaster assistance provided by federal agencies and organizations (see **Figure 2**).

Figure 2. Delivery Sequence

44 C.F.R. §206.191(d)(2)

FEMA

From Electronic Code of Federal Regulations e-CFR data is current as of March 13, 2019

(2) The delivery sequence is, in order of delivery:

1. (i) Volunteer agencies' emergency assistance (except expendable items such as clothes, linens, and basic kitchenware); insurance (including flood insurance);
2. (ii) Housing assistance pursuant to section 408 of the Stafford Act.
3. (iii) Small Business Administration and Farmers Home Administration disaster loans;
4. (iv) Other Needs assistance, pursuant to section 408 of the Stafford Act or its predecessor program, the Individual and Family Grant Program.
5. (v) Volunteer agencies' "additional assistance" programs; and
6. (vi) The "Cora Brown Fund."

Source: Based on CRS interpretation of 44 C.F.R. §206.191.

Note: Housing assistance under Section 408—Federal Assistance to Individuals and Households includes assistance to individuals and households who are displaced from their predisaster primary residences or whose predisaster primary residences are rendered uninhabitable, or, with respect to individuals with disabilities, rendered inaccessible or uninhabitable as a result of a major disaster. Section 408 includes temporary housing assistance, as well as repairs. Other Needs Assistance (ONA) under Section 408 includes both SBA-dependent and non-SBA-dependent ONA. SBA-dependent ONA may be available for applicants who do not qualify for an SBA disaster loan, or whose loan amount is insufficient; this type of ONA includes personal property, transportation, and moving and storage assistance. Non-SBA-dependent ONA includes financial assistance for medical, dental, funeral, childcare, and miscellaneous expenses. Cora Brown of Kansas City, MO, died in 1977. She left a portion of her estate to the United States to be used as a special fund to relieve human suffering caused by natural disasters. For more information on the Cora Brown Fund, see https://www.fema.gov/media-library-data/1434639028239-341e17807cb06b0bf000d21cc7552b2c/CoraBrown-FactSheet-final508.pdf.

Community Development Block Grants: Recent Funding History, by Eugene Boyd.

[98] 42 U.S.C. §5155; 44 C.F.R. §206.191.

[99] 42 U.S.C. §5155; 44 C.F.R. §206.191.

[100] 42 U.S.C. §5155. There are numerous statutes and regulations that prohibit duplication of benefits with respect to disaster assistance. These are included in **Appendix A**.

An organization's position within the sequence determines the order in which it should provide assistance and what other resources must be considered before that assistance is provided. Further, each organization is responsible for delivering assistance without regard to duplication later in the sequence.

According to FEMA regulations, the agency or organization that is later in the delivery sequence should not provide assistance that duplicates assistance provided by an agency or organization earlier in the sequence (e.g., SBA disaster loans should be provided before SBA-Dependent ONA). When the delivery sequence has been disrupted, the disrupting agency is responsible for rectifying the duplication.

As mentioned previously in this report, SBA and FEMA have a computer matching agreement to share real-time data on assistance provided to applicants.[101] Both the SBA and FEMA also share relevant data—including personally identifiable information (PII) related to applicants—with local, state, territorial, and Indian tribal governments, and voluntary agencies.[102] This is done to prevent a duplication of benefits, as well as to potentially enable applicants to receive additional disaster assistance.[103] In cases where the data includes PII, a Memorandum of Understanding (MOU) must first be prepared and signed by both SBA and the authorized requesting party (state, territory, tribe, local government, or voluntary entity) to help avoid duplication of benefits,[104] and FEMA must follow the routine uses outlined in the DHS/FEMA-008 Disaster Recovery Assistance Files System of Records Notice.[105]

The SBA and FEMA entered into the CMA pursuant to Section (o) of the Privacy Act of 1974 (5 U.S.C. §552a).[106] As outlined in the SBA-FEMA Computer Matching Agreement *Federal Register* notice, "the financial and administrative responsibilities will be evenly distributed between SBA and DHS/FEMA unless otherwise set forth in this agreement."[107] The *Federal Register* notice further stated that the CMA is "part of a [g]overnment-wide initiative, Executive Order 13411—Improving Assistance for Disaster Victims (August 29, 2006) ... to identify and prevent duplication of benefits received by individuals, businesses, or other entities for the same disaster."[108]

Although the CMA is part of a government-wide initiative to prevent duplication of benefits, it is solely used by the SBA and FEMA. Some may argue that the CMA should also be used by other federal agencies that offer disaster assistance (such as HUD, which administers CDBG-DR). Others, however, might argue using the CMA with agencies other than the SBA and FEMA is problematic or potentially ineffective. For example, HUD provides funds to state and local

[101] SBA, "Computer Matching Agreement," 84 *Federal Register* 2651, February 7, 2019.

[102] FEMA, *IAPPG*, p. 12.

[103] FEMA, *IAPPG*.

[104] The MOU template can be located at https://webcache.googleusercontent.com/search?q=cache:W5N0CAA42UYJ:https://www.sba.gov/sites/default/files/articles/SBA%2520Disaster%2520Data%2520Sharing%2520MOU%2520and%2520Instructions_0.docx+&cd=1&hl=en&ct=clnk&gl=us&client=firefox-b-1-d.

[105] Department of Homeland Security, "Privacy Act of 1974; Department of Homeland Security Federal Emergency Management Agency—008 Disaster Recovery Assistance Files System of Records," 78 *Federal Register* 25282-25288, April 30, 2013, at https://www.govinfo.gov/content/pkg/FR-2013-04-30/pdf/2013-10173.pdf.

[106] As amended by the Computer Matching and Privacy Protection Act of 1988 (P.L. 100-503), and as amended by the Computer Matching and Privacy Protection Amendments of 1990 (P.L. 101-508, 5 U.S.C. §552a(p) (1990)).

[107] SBA, "Computer Matching Agreement," 84 *Federal Register* 2650, February 7, 2019.

[108] SBA, "Computer Matching Agreement," 84 *Federal Register* 2651, February 7, 2019.

jurisdiction grantees. HUD does not have the individual award data to match up with SBA disaster loan applicant data to determine instances of duplication.

If Congress is concerned about the use of the CMA, it could investigate how the CMA could be used in conjunction with other disaster assistance programs. If CMA is not being universally used by federal agencies, Congress could investigate why it is not being used, evaluate challenges preventing its use, and mandate its use across the federal government. Additionally, Congress could use oversight to investigate how effective the CMA has been at preventing duplication since its implementation.

Similarly, Congress could also review how applicant information is being used by local, state, territorial, and Indian tribal governments, as well as voluntary agencies, to determine the effectiveness of information sharing with regard to reducing duplication.

SBA Income Test

According to SBA Memorandum 85-20 (see **Appendix B**), the income test table is used as a guide "for summary declines." It is unclear, however, if income levels are a hard limit to screen out applicants, or if there is discretion in the process.[109]

Congress may consider whether the SBA should continue to use established thresholds and formulas based on SBA Memorandum 85-20 to determine eligibility, or provide SBA with some measure of discretion in the process. Some might argue that uniformity would ensure equitable determinations. Others might argue that a one size-fits-all approach does not address special or mitigating circumstances. In general, SBA disaster loan eligibility is assigned to the person (or entity in the case of businesses) that legally owns or is responsible for the repair or replacement of the disaster-damaged property and is based on that person's ability to repay the loan. It could be argued, however, that the ability to pay a loan is not solely determined by income and that a range of factors and circumstances should also be considered. For example, a retired person may not meet a certain minimum income level, but may own assets that could be liquidated for repayment purposes. Another example is the parent of a university student who is willing to cosign for their child's SBA disaster loan. In both of these examples, strict adherence to an income test might prevent people from obtaining loans despite their being able to repay them through nontraditional methods. Congress may also consider whether the income test is an effective screening tool for identifying applicants that meet the income test but cannot repay their disaster loan; for example, a person who earns more than the minimum income level, but has debt that impedes their ability to repay the loan.

If Congress is concerned about how income factors into assistance determinations, it could consider requiring the SBA and FEMA to publish specific determination criteria in their respective regulations and policy guidance documents. Congress may also consider putting the income determination formula into statute.

[109] Minimum income includes wages, alimony, child support payments, interest and dividend income from savings, retirement, pension, social security, or disability payments.

Appendix A. Relevant Duplication of Benefits Statutory Authorities and Regulations

The following is a listing of selected authorities and regulations pertaining to the duplication of disaster assistance benefits. This list should be considered representative, not exhaustive.

Stafford Act (42 U.S.C. §5155)

The Stafford Act is the primary statute governing the provision of federal disaster assistance, particularly FEMA assistance. Section 312 of the Stafford Act requires federal agencies that provide financial disaster assistance to ensure that individuals, businesses, or other entities suffering losses as a result of a major disaster or emergency do not receive assistance for losses for which they have already been compensated. Section 312 also requires the President to establish procedures that ensure uniformity in preventing duplication of benefits. Under Section 312, any person, business, or other entity that has received or is entitled to receive federal disaster assistance is liable to the United States for the repayment of such assistance to the extent that such assistance duplicates benefits available for the same purpose from another source, including insurance and other federal programs.

Stafford Act (42 U.S.C. §5174)

Section 408(a)(1) states that the President may provide assistance to individuals and households who, as a result of a major disaster, "have necessary expenses and serious needs in cases in which the individuals and households are unable to meet such expenses or needs through other means."

FEMA Regulations

44 C.F.R. §206.191 establishes the policies implementing Section 312 of the Stafford Act, and states that it is FEMA's policy to prevent the duplication of benefits between its own programs, other assistance programs, and insurance benefits. The regulation requires individuals to repay all duplicated assistance to the agency providing the assistance. Under 44 C.F.R. §206.191, a federal agency providing disaster assistance is responsible for preventing or rectifying duplication of benefits when they occur. 44 C.F.R. §206.191 also includes a "delivery sequence" hierarchy intended to prevent waste, fraud, and abuse of program assistance, including the duplication of benefits (see **Figure 2**).

44 C.F.R. §206.111 defines the financial ability of the applicant to pay housing costs. According to 44 C.F.R. §206.111 if the "household income has not changed subsequent to or as a result of the disaster then the determination is based upon the amount paid for housing before the disaster. If the household income is reduced as a result of the disaster then the applicant will be deemed capable of paying 30 percent of gross post disaster income for housing. When computing financial ability, extreme or unusual financial circumstances may be considered by the Regional Administrator."

Small Business Act (15 U.S.C. §636(b)(1)(A))

The first proviso in 15 U.S.C. §636(b)(1)(A) states that the SBA is authorized to make disaster loans "[p]rovided, [t]hat such damage or destruction is not compensated for by insurance or otherwise."

Small Business Act (15 U.S.C. §647)

15 U.S.C. §647(a) prohibits the SBA from providing benefits that duplicate the assistance provided by another department or agency of the federal government. It also states that if loan applications are refused or denied by a department or agency due to administrative withholding or due to an administratively declared moratorium, then no duplication is deemed to have occurred.

SBA Regulation

13 C.F.R. §123.101(c) states that applicants for SBA Disaster Loan assistance are not eligible for a home disaster loan if their damaged property can be repaired or replaced with the proceeds of insurance, gifts, or other compensation. These amounts must either be deducted from the amount of the claimed losses or, if received after SBA has disbursed the loan, must be paid to SBA as principal payments on the loan.

Appendix B. SBA Memorandum 85-20

Figure B-1. SBA Memorandum 85-20

Date: JUN 13 1985

To: All Area Directors # 85-20

From: Bernard Kulik, DAA/DA

Subject: Income Test Tables

Enclosed you will find a set of income test tables to be used as guides for summary declines. The information is from Health and Human Services (HHS) 1985 Poverty Income Guidelines. We increased the single member family unit by 150 percent and all other units by 125 percent to arrive at the minimum cost of living estimates. The Puerto Rico table is for disaster declarations on or after May 31, 1985, and the other tables for disaster declarations on or after June 10, 1985. No other income guides are acceptable for use as minimum cost of living estimates.

(Signed) Bernard Kulik

Bernard Kulik
Deputy Associate Administrator
for Disaster Assistance

Enclosures

DAD:Allred:JJ:6/11/85:0906d

cc: Subject Reading Central Files Allred

Appendix C. FEMA and SBA Constituent Resources

The following provides various FEMA and SBA resources and information that may be of use for constituents in declared disaster areas.

Application Websites

FEMA Assistance:

https://www.disasterassistance.gov/

SBA Assistance:

https://disasterloan.sba.gov/ela/

Contact Numbers

FEMA

1-800-621-FEMA (3362)

TTY: 1-800-462-7585

SBA

1-800-659-2955

TTY: 1-800-877-8339

Frequently Asked Questions About FEMA Individual Assistance

https://www.fema.gov/individual-disaster-assistance

https://www.fema.gov/disaster-assistance-available-fema

https://www.fema.gov/media-library-data/1528985076829-340c58ded55b2a0e998aeb755f2478bb/IndividualAssistanceProgram.pdf

Frequently Asked Questions About the SBA Disaster Loan Program

https://www.sba.gov/sites/default/files/articles/sba-disaster-loans-faq.pdf

SBA Form 5C

https://disasterloan.sba.gov/ela/Documents/Disaster%20Home%20Loan%20Application%20(SBA%20Form%205c).aspx

SBA Form 5C in Spanish

https://disasterloan.sba.gov/ela/Documents/Loan%20Application%20Home%20Spanish%20(Form%205C).pdf

IRS Form 4506-T Instructions

https://disasterloan.sba.gov/ela/Documents/Request%20for%20Transcript%20of%20Tax%20Return%20(IRS%20Form%204506T).aspx?ff=false&sp=0

IRS Form 4506-T

https://www.sba.gov/sites/default/files/articles/f4506-t-2015-09-00.pdf

Author Information

Bruce R. Lindsay
Analyst in American National Government

Elizabeth M. Webster
Analyst in Emergency Management and Disaster Recovery

Acknowledgments

FEMA's Individual Assistance Division, under the Office of Response and Recovery, and SBA's Office of Disaster Assistance provided input and insight on the application process for Individual Assistance and SBA disaster loans.

Disclaimer

This document was prepared by the Congressional Research Service (CRS). CRS serves as nonpartisan shared staff to congressional committees and Members of Congress. It operates solely at the behest of and under the direction of Congress. Information in a CRS Report should not be relied upon for purposes other than public understanding of information that has been provided by CRS to Members of Congress in connection with CRS's institutional role. CRS Reports, as a work of the United States Government, are not subject to copyright protection in the United States. Any CRS Report may be reproduced and distributed in its entirety without permission from CRS. However, as a CRS Report may include copyrighted images or material from a third party, you may need to obtain the permission of the copyright holder if you wish to copy or otherwise use copyrighted material.