Technical Manual: Overtopping Protection for Dams

Best Practices for Design, Construction, Problem Identification and Evaluation, Inspection, Maintenance, Renovation, and Repair

FEMA P-1015/May 2014

FEMA

FEMA's mission is to support our citizens and first responders to ensure that as a nation we work together to build, sustain and improve our capability to prepare for, protect against, respond to, recover from and mitigate all hazards.

The U.S. Department of the Interior protects America's natural resources and heritage, honors our cultures and tribal communities, and supplies the energy to power our future.

The mission of the Bureau of Reclamation is to manage, develop, and protect water and related resources in an environmentally and economically sound manner in the interest of the American public.

On the cover.—Vesuvius Dam (Ohio) after overtopping protection placement of roller compacted concrete. Construction was completed in 2001 (Reclamation)

Preface

The original design of a dam may be reevaluated for a number of reasons, including the occurrence of an incident or unusual load, the availability of new information, the refinement of certain design requirements or guidelines, the adoption of risk-based criteria, or as part of a regular dam safety program. During this process, the design flood may be revised, resulting in a flood that is larger than was used for the original design. In many cases, analysis may show that the revised flood will result in the dam being overtopped due to insufficient reservoir storage and/or release capabilities.

There are many methods available for accommodating larger revised floods. However, some of the more common methods, such as increasing reservoir storage by raising the dam crest or increasing release capability by increasing the spillway discharge capacity, can often be cost prohibitive or impractical. To address this situation, new design approaches have been developed that may allow for the dam to be safely overtopped. The design and construction of overtopping protection for dams is increasingly being viewed as a viable alternative to larger spillways as developing watersheds or changing hydrology produce higher peak flows and the need for additional spillway discharge capacity for existing dams.

Overtopping protection may be an attractive alternative because of its potential economic advantages and may offer an economical solution to a hydrologic deficiency that would otherwise not be addressed. Maintaining the existing hydraulic conditions at the dam to the extent possible is also increasingly important as downstream river corridors are developed in close proximity to the channel. This document assumes that a hydrologic deficiency exists at a dam and that traditional approaches to safely accommodate a larger design flood have first been investigated.

The decision to pursue overtopping protection for an existing dam must give strong consideration to the potential risk of failure of the protection system, which could quickly lead to a full breach of the dam. This is especially true for embankment dams, in the sense that a small defect or design flaw could lead to catastrophic failure once the embankment is exposed to the overtopping flow. An evaluation of this type of risk must be incorporated into the decision-making process, whether qualitatively or quantitatively.

A decision to use overtopping protection in place of improving the service spillway, imposing a reservoir restriction, raising the dam crest, or constructing an auxiliary spillway cannot be made lightly. Overtopping protection should generally be reserved for situations with some combination of very low annual probability of occurrence (e.g., 1 in 100), physical or environmental constraints on constructing other methods of flood conveyance, and prohibitive cost of other alternatives; or where downstream consequences of dam failure are demonstrated

to be low. A careful analysis of all potential failure modes for the dam and appurtenant features must be performed for both the existing (baseline) conditions and for the proposed modified conditions.

Alternatives for overtopping protection may use a variety of different materials, such as roller-compacted concrete, cast-in-place concrete, precast concrete blocks, gabions, vegetative cover, turf reinforcement mats, synthetic turf revetments, flow-through rockfill, reinforced rockfill, riprap, and various types of geosynthetic materials including geomembranes, geocells, and fabric-formed concrete. Not all materials are applicable in every situation. Significant research and hydraulic testing has been conducted on many of these materials, but since most overtopping protection is designed to function at an infrequent recurrence interval, practical experience on constructed projects that have been subjected to overtopping flows is limited to date. New materials and methods of analysis are always being developed, so designers may need to rely upon manufacturers' design recommendations for these new materials, always mindful of the limitations of product testing and analysis. Independent analysis should always be considered as appropriate.

Many organizations, such as the Bureau of Reclamation (Reclamation) and the U.S. Army Corps of Engineers (USACE), have conducted extensive model testing on a variety of overtopping protection alternatives. In addition, these organizations have completed evaluations of the performance of full-size, prototype structures and have modified designs to accommodate overtopping. Often, the results of these studies are not well known outside of these organizations. Due to the absence of any single recognized standard for overtopping protection alternatives for dams, there is some inconsistency in the design and construction rationale. In an effort to correct this problem, this manual has been prepared to collect and disseminate information and experience that is current and has a technical consensus. The goal of this manual is to provide a nationally recognized source to promote greater consistency between similar project designs, facilitate more effective and consistent review of proposed designs, and aid in the design of safer, more reliable facilities. This manual is not intended to provide detailed design procedures for all potential applications.

Information on dam overtopping alternatives is dispersed in a variety of sources such as text books, handbooks, and reference manuals. These sources may not reflect recent advances in research and design, published professional papers, and lessons learned from constructed projects. The authors reviewed most of the available information on dam overtopping protection alternatives in preparing this manual, and have attempted to condense and summarize the body of existing information, and provide a clear and concise synopsis of today's best practices. Where conflicting information was available, the authors focused on what they judged to be the "best practice" and included that judgment in this manual. Where detailed documentation exists, the authors cited it to avoid duplicating extensive technical details. Where applicable, the reader is directed to other consensus-

accepted references for additional guidance. This manual is intended for use by personnel familiar with dams, such as dam designers, inspectors, construction oversight personnel, dam safety engineers, and decision-makers.

Designers should continue to explore and investigate the subject of overtopping of dams. No single publication can cover all of the requirements and conditions that can be encountered during design and construction. Therefore, it is critically important that when an overtopping protection alternative is considered, the designer must clearly understand all aspects of its design, construction, and anticipated future performance.

The authors caution the users of this manual that sound engineering judgment should always be applied when using references. The authors have strived to avoid referencing any technical material that is considered outdated for use in modern designs. However, the user should be aware that certain portions of references cited in this manual may have become outdated in regards to design and construction aspects and/or philosophies. While these references still may contain valuable information, users should not assume that the entire reference is suitable for design and construction purposes.

The authors used many sources of information in developing this manual, including:

- Published design standards and technical publications of the various Federal and State agencies and organizations involved with the preparation of this manual.

- Published professional papers and articles from selected authors, technical journals and publications, and organizations.

- Experience of the individuals, Federal and State agencies, and organizations involved in the preparation of this manual.

This manual is available from FEMA in digital versatile disc (DVD) format. The DVD includes built-in Adobe Acrobat Reader software, hyperlinks, and search capabilities. A hyperlink is a highlighted word or image within the manual which, when clicked, takes the user to another place within the manual or to another location altogether. Hyperlinks are especially useful when the user wants to see the full reprint of a cited reference or the exact location in a reference from which the material was cited. The DVD contains the manual and portable document format (PDF) copies of selected cited references available in the public domain. For other references, users may want to contact the author or publisher directly for reprint information.

This manual can also be downloaded from the FEMA website at:

http://www.fema.gov/plan/prevent/damfailure/publications.shtm.

This manual is intended solely for noncommercial and educational purposes.

Suggestions for changes, corrections, or updates to this manual should be directed to:

Bureau of Reclamation
Denver Federal Center, Bldg. 67
6th Avenue and Kipling Street
Denver CO 80225-0007
Attention: Tony Wahl (86-68460)
twahl@usbr.gov

Please reference specific pages, paragraphs, or figures within the manual, together with proposed new material in any convenient format. Sources of proposed new material should be completely cited. Submission of material signifies permission for use in a future revised edition of this manual, but credit for such new material will be given where appropriate.

The material presented in this manual has been prepared in accordance with recognized engineering practices. The guidance in this manual should not be used without first securing competent advice with respect to its suitability for any given application. The publication of the material contained herein is not intended as representation or warranty on the part of individuals or agencies involved, or any other person named herein, that this information is suitable for any general or particular use, or promises freedom from infringement of any patent or patents.

Anyone making use of this information assumes all liability from such use. Any use of trade names and trademarks in this manual is for descriptive purposes only and does not constitute endorsement. The information contained herein regarding commercial products or firms may not be used for advertising or promotional purposes and is not to be construed as an endorsement of any product or firm.

Acknowledgements

The Federal Emergency Management Agency (FEMA), as the lead agency for the National Dam Safety Program (NDSP), sponsored the development of this manual in conjunction with Reclamation. The primary authors of this document were Chuck Cooper, P.E.; Robert Dewey, P.E.; Bill Fiedler, P.E.; Kathy Frizell, P.E.; Tom Hepler, P.E.; ; and Tony Wahl, P.E, of Reclamation. Additional contributions were made by Elizabeth Cohen, P.E.; Christopher Ellis, P.E.; Dennis Hanneman, P.E., and Tracy Vermeyen, P.E, of Reclamation. Additional technical assistance was provided by Cynthia Fields, Cindy Gray, and Gia Price. Peer review of this manual, in whole or in part, was provided by Dave Gillette, P.E. and Bill Engemoen of Reclamation; Sal Todaro, P.E., USACE; Paul Schweigher, P.E., Gannett Fleming; Rafael Morán and Miguel Toledo, and Technical University of Madrid.

Member of the National Dam Safety Review Board (NDSRB) reviewed this manual prior to issuance. The NDSRB plays an important role in guiding the NDSP. The NDSRB has responsibility for monitoring the safety and security of dams in the United States, advising the Director of FEMA on national dam safety policy, consulting with the Director of FEMA for the purpose of establishing and maintaining a coordinated NDSP, and monitoring State implementation of the assistance program. The NDSRB consists of representatives appointed from Federal agencies, State dam safety departments, and the U.S. Society on Dams (USSD). The NDSRB Research Work Group and the Interagency Committee on Dam Safety (ICODS) provided additional review. A number of additional engineers and technicians provided input in preparation of this manual, and the authors greatly appreciate their efforts and contributions. The authors, peer reviewers, and their associated agencies and organizations contributed information and materials for use in this manual. The authors extend their appreciation to the following agencies and individuals for graciously providing permission to use their materials in this publication:

- Agricultural Research Service (ARS)
- U.S. Department of Agriculture
- American Society of Agricultural and Biological Engineers (ASABE)
- American Society of Civil Engineers (ASCE)
- Association for Hydro-Environment Engineering and Research
- Association of State Dam Safety Officials (ASDSO)
- Armortec
- Black & Veatch Ltd, United Kingdom

- Erik Bollaert, PhD., President of AquaVision Engineering
- Rolando Bravo, Ph.D., P.E., P.H., D.WRE, Executive Director of the American Institute of Hydrology
- Bruce Brown PhD., Bruce Brown Consulting Pty. Ltd
- Construction Industry Research and Information Association (CIRIA)
- Colorado State University
- Concrib
- Contech Engineered Solutions LLC
- Donnelly Fabricators
- Elsinore Valley Municipal Water District
- Engineering Heritage Canberra, Australia
- Envirocon
- Erosion Control Magazine
- Gannett Fleming, Inc. Umberto Fratino, Ph.D, Full Professor, DICATECh, Technical University of Bari, Italy
- GEI Consultants, Inc.
- DX2 Geosyntex
- GabionBaskets.net
- Kenneth Hansen, P.E., Individual Consulting Engineer
- Juntong Guanda
- Maccaferri Inc.
- Montana Department of Natural Resources and Conservation
- Rafael Morán, PhD, Civil Engineering Department: Hydraulics and Energy E.T.S.I. de Ingenieros de Caminos, Canales y Puertos, Technical University of Madrid, Spain
- National Civil Engineering Laboratory (LNEC) in Lisbon, Portugal
- Natural Resources Conservation Service (NRCS)
- Pannon Gabion, Hungary
- Portland Cement Association (PCA)
- Presto Geosystems
- Presto Products Company
- City of Seattle

- Synthetex
- Sweetwater Authority
- Terra Aqua Gabions, Inc.
- Christopher I. Thornton, P.E. , PhD, Director, Hydraulics Laboratory,Colorado State University
- U.S. Society on Dams (USSD)
- Watershed Geosynthetics LLC)
- WEBTEC, Inc
- John Wiley & Sons Inc.

Contents

Page

Table of Contents

Chapter 1. General Considerations for Embankment Dams 7
1.1 Embankment Dam Overtopping Protection Considerations 10
1.2 Site Investigations and Analyses for Overtopping Protection 12
1.3 Types of Overtopping Protection Systems for Embankment Dams 17

Chapter 2. Roller-Compacted Concrete and Soil Cement 21
2.1 Historical Perspective 23
2.2 Sloped chute 25
2.3 Construction Considerations 44
2.4 Vulnerabilities and Risk 46

Chapter 3. Conventional or Mass Concrete 49
3.1 Historical Perspective 49
3.2 Design and Analysis 51
3.3 Construction Considerations 71
3.4 Vulnerabilities and Risk 72

Chapter 4. Precast Concrete Blocks 75
4.1 Historical Perspective 78
4.2 Design and Analysis 80
4.3 Construction Considerations 87
4.4 Vulnerabilities and Risk 89
4.5 Maintenance and Inspection 91

Chapter 5. Gabions 93
5.1 Historical Perspective 96
5.2 Design and Analysis 97
5.3 Availability 109
5.4 Construction Considerations 109
5.5 Vulnerabilities and Risk 111

Chapter 6. Vegetative Cover, Turf Reinforcement Mats, and Synthetic Turf Revetments 115
6.1 Historical Perspective 116
6.2 Design and Analysis 119
6.3 Establishment of Vegetative Systems 128
6.4 Turf Reinforcement Details 130
6.5 Vulnerabilities and Risk 130

Chapter 7. Flow-through Rockfill and Reinforced Rockfill 135
7.1 Flow-Through Rockfill 135
7.2 Reinforced Rockfill 137
7.3 Design and Analysis 142
7.4 Vulnerabilities and Risk 148

Chapter 8. Riprap 151
8.1 Historical Perspective 151
8.2 Design and Analysis 154
8.3 Alternative Riprap Placement Methods 164
8.4 Construction Considerations 166
8.5 Vulnerabilities and Risk 168

Chapter 9. Geomembrane Liners, Geocells, and Fabric-Formed Concrete 169
9.1 Geosynthetic Systems 169
9.2 Historical Perspective 173
9.3 Design and Analysis 174
9.4 Construction Considerations 182
9.5 Vulnerabilities and Risk 183

Chapter 10. Summary of Overtopping Protection Alternatives for Embankment Dams 185
10.1 Physical Factors 185
10.2 Hydraulic Factors 189
10.3 Socio-Economic Factors 191
10.4 Summary Table 192

Chapter 11. General Considerations for Concrete Dams 195
11.1 Historical Perspective 195
11.2 Failure Mechanisms (Potential Failure Modes) 196
11.3 Concrete Dam Type 198
11.4 Site Implications 200
11.5 Flow Depth and Duration Factors 213
11.6 Types of Concrete Dam Overtopping Protection 214
11.7 General Design Considerations 215
11.8 Vulnerabilities 216

Chapter 12. Roller-Compacted Concrete 219
12.1 Historical Perspective 219
12.2 Design and Analysis 224
12.3 Construction Considerations 226
12.4 Vulnerabilities and Risk 227

Chapter 13. Conventional or Mass Concrete 229
13.1 General 229
13.2 Historical Perspective 229
13.3 Design and Analysis 233

13.4 Construction Considerations 238
13.5 Vulnerabilities and Risk 238

Chapter 14. Foundation and Abutment Reinforcing 241
14.1 Historical Perspective 241
14.2 Design and Analysis 245
14.3 Construction Considerations 249
14.4 Vulnerabilities and Risk 250

Chapter 15. Tailwater Effects 253
15.1 Historical Perspective 253
15.2 Design and Analysis 256
15.3 Construction Cnsiderations 266
15.4 Vulnerabilities and Risk 266

Chapter 16. Summary of Overtopping Protection Alternatives for Concrete Dams 267
16.1 Physical Factors 267
16.2 Hydrologic/Hydraulic Factors 270
16.3 Socio-Economic Factors 270
16.4 Summary of Concrete Dam Overtopping Alternatives 271

Attachment 1: List of RCC Overtopping Protection Projects

Appendix—Case Histories

page A-

Part 1: Embankment Dams

Addicks and Barker Dams, Texas: RCC 1
Arthur R. Bowman Dam, Oregon: CRCS 3
Baldhill Dam, North Dakota: CRCS 19
Barriga Dam, Spain: ArmorWedge™ Block 25
Bruton Flood Storage Reservoir, England: Tapered Wedge Block 37
Cottonwood Dam No. 5, Colorado: Geomembrane Liner 41
Empire Landfill, Pennsylvania: Geocell 53
Friendship Village, Missouri: ArmorWedge Block 55
Googong Dam, Australia: Reinforced Rockfill 59
Richmond Hill Mine, South Dakota: Non-cable-tied ACB 63
Ringtown No. 5 Dam, Pennsylvania: RCC 69
Spring Creek Dam, Colorado: RCC 71
Strahl Lake Dam, Indiana: Cable-tied ACB 73
Tongue River Dam, Montana: RCC 79
West Cornfield Dam, New Mexico: Gabions 81

Part 2: Concrete Dams

Boundary Dam: Shotcrete overlays with rock reinforcement 85
Coolidge Dam: Concrete overlays with rock reinforcement 89
Gibson Dam: Concrete overlays with rock reinforcement 107
Railroad Canyon Dam: Concrete overlays, rock reinforcement
and downstream weir 119
Sweetwater Dam: Mass concrete overlays 123
Tygart Dam: Concrete channel at downstream toe of dam..... 129

Figures

No. *page*

Figure 1-1.—Typical hydraulic conditions during embankment overtopping. 9
Figure 2-1.—Downstream slope geometry of RCC overtopping section 26
Figure 2-2.—Overtopping protection with RCC placed parallel to slope 26
Figure 2-3.—Typical section: RCC overtopping protection. 36
Figure 2-4.—Typical drainage details 38
Figure 2-5.—Spillway flow training walls..... 40
Figure 2-6.—Reinforced concrete training wall (section looking downstream) 41
Figure 2-7.—Plan of RCC overtopping and abutment protection partially constructed. 42
Figure 3-1.—Development of spillway stagnation pressures. 54
Figure 3-2.—Concrete delamination due to thermal expansion 55
Figure 3-3.—Mean uplift pressure, sharp-edged geometry, sealed cavity, ⅛-inch gap..... 57
Figure 3-4.—Mean uplift pressure, sharp-edged geometry, vented cavity, ⅛-inch gap 57
Figure 3-5.—Mean uplift pressure, sharp-edged geometry, vented cavity, ½-inch gap..... 58
Figure 3-6.—Unit discharge for joint/crack, sharp-edged geometry, ⅛-inch gap..... 59
Figure 3-7.—Unit discharge for joint/crack, sharp-edged geometry, ½-inch gap 59
Figure 3-8.—Defensive design measures for concrete chutes to prevent uplift failure 61
Figure 3-9.—Cavitation created in low ambient pressure chamber 63
Figure 3-10.—Incipient cavitation characteristics of chamfered offsets 67
Figure 3-11.—Incipient cavitation characteristics of isolated surface irregularities..... 68
Figure 3-12.—Cavitation damage as a function of cavitation index and hours of operation . . 69
Figure 4-1.—a) Fabric-formed AB mat b) Armorwedge tapered block c) Concrete construction
or cinder blocks..... 77
Figure 4-2.—Common examples of precast concrete revetment systems. 78
Figure 4-3.—Hydraulic forces on the typical cable-tied ACB system 82
Figure 4-4.—Typical forces on a wedge-block ACB system..... 84
Figure 4-5.—Cabled ACB section being delivered and installed 87

Figure 5-1.—Example of gabion baskets delivered to the project site 93
Figure 5-2.—Typical unfilled gabion basket on left and mattress on right. 94
Figure 5-3.—Example of welded wire gabions filled with various rock sizes..... 94
Figure 5-4.—Example of gabion spillway crest structure 94
Figure 5-5.—Example of a gabion channel and drop structure 95
Figure 5-6.—Gabion erosion protection on slope of embankment. Zamoly Reservoir, Hungary. 95
Figure 5-7.—Unit head loss over plain gabion steps. 101
Figure 5-8.—Depth at toe of plain gabion spillway 102
Figure 5-9.—Laboratory test facility at the University of Bari, Italy 103
Figure 5-10.—Example gabion sections for overtopping protection and energy dissipation. 105
Figure 5-11.—Example filter/bedding layer for gabion construction 107
Figure 5-12.—Example geotextile bedding layer for gabion construction 108
Figure 5-13.—Gabion baskets on slope being filled with rock, Milltown Dam Removal project in Milltown, Montana 110
Figure 5-14.—Example gabion structure without and with proper downstream anchor 112
Figure 5-15.—Example foundation erosion/migration and gabion settlement 113
Figure 6.1.—HydroTurf™ Outfall Structure with St. Johns River Water Management District in Florida 119
Figure 6-2.—CIRIA velocity-duration curves for plain and reinforced grass 126
Figure 6-3.—Synthetic turf revetment system..... 127
Figure 6-4.—Virginia Kendall Dam in Ohio after 3 hours of overtopping flow 133
Figure 7-1.—Pit No. 7 Afterbay Dam in California 138
Figure 7-2.—Pit No. 7 Afterbay Dam, looking at downstream face, toward right abutment spillway. Dam crest has been capped with concrete. 139
Figure 7-3.—Embankment section—Des Arc Bayou site No. 3 141
Figure 7-4.—Detail of downstream slope reinforcement at the toe and at midslope—Des Arc Bayou site No. 3 141
Figure 7-5.—Reinforcement detail for the downstream toe—Des Arc Bayou site No. 3. 142
Figure 7-6.—Schematic detail of tie-back steel reinforcing bars with end-anchorage alternatives 146
Figure 7-7.—Local pattern of rock movement within a mattress 149
Figure 8-1. – Dumped riprap placement on 6-inch bedding layer for Upper Stoneville Reservoir Dam, Massachusetts 153
Figure 8-2.—Rock chute spillway on Little Washita Site 13 in Grady County, Oklahoma..... 154
Figure 8-3.—Example calculation of allowable unit discharge as a function of slope, assuming a fixed stone size 162
Figure 8-4.—Example calculation of required stone size as a function of slope, assuming a fixed allowable unit discharge 163

Figure 9-1.—Examples of a perforated and solid geoweb system with various fill materials (a) Geoweb™; (b) TerraCell® 171
Figure 9-2.—(a) Filter Point™ fabric form pumped with concrete (b) Filter Band™ fabric form pumped with concrete ; (c) Uniform Section™ fabric form. 173
Figure 9-3.—Profile along the centerline of the spillway showing the location of the geomembrane sheets (dimensions in feet)..... 176
Figure 9-4.—Typical cross-section of geomembrane installation procedure along the channel. 176
Figure 9-5.—Details of the upstream and downstream ends of the geomembrane blankets, showing a) upstream end of the spillway at the dam crest; b) typical section along the spillway showing the overlap of about 5 ft; and c) downstream end of the spillway liner attachment to the concrete end sill..... 177
Figure 9-6.—TerraCell design guide for moderate conditions 179
Figure 9-7.—Fabric forms being filled with fine aggregate concrete. 182
Figure 11-1.—Scour downstream from concrete dam showing potential for daylighting of foundation discontinuities 198
Figure 11-2.—Free jets (a) overtopping a dam, (b) issuing from an orifice through a dam, (c) definition sketch for parameters of a free falling jet. 201
Figure 11-3.—Sectional view of the final trajectory profile for the PMF though a dam section aligned with the river channel..... 204
Figure 11-4.—Footprint of the trajectory with no spread of the jet for the PMF overtopping. 205
Figure 11-5.—Sectional view of predicted trajectories for various frequency overtopping flood events..... 206
Figure 11-6.—Jet diffusion in a plunge pool for two-phase shear layer and a highly turbulent plunging jet. 211
Figure 12-1.—Completed RCC buttress at downstream face of Camp Dyer Diversion Dam in Arizona.. 220
Figure 12-2.—RCC buttress for Camp Dyer Diversion Dam during overtopping in January 1993..... 220
Figure 12-3.—Concrete overtopping protection for Santa Cruz Dam in New Mexico..... 221
Figure 12-4.—Service spillway flows confined by training walls on stepped downstream face of Santa Cruz Dam 222
Figure 12-5.—RCC buttress construction within the original spillway plunge pool for Pueblo Dam in Colorado..... 223
Figure 12-6.—Mechanical anchors being installed through the RCC toe block into the foundation for Pueblo Dam spillway, to improve sliding resistance. 223
Figure 12-7.—RCC buttress being constructed at downstream face of Camp Dyer Diversion Dam..... 225
Figure 12-8.—RCC placements followed curvature of existing arch dam, Santa Cruz Dam (Reclamation). 225
Figure 13-1.—Crest of concrete dam with splitter piers for overtopping flows 230
Figure 13-2.—Splitter piers designed to aerate overtopping flows..... 230
Figure 13-3.—Concrete overtopping protection at downstream toe of dam..... 231

Figure 13-4.—Concrete overtopping protection at downstream toe of dam 231
Figure 13-5.—Concrete channel using guide wall to convey overtopping flows 232
Figure 14-1.—Nested foundation blocks, view from downstream 242
Figure 14-2.—Nested foundation blocks, view from upstream 242
Figure 14-3.—Example of removable rock block in dam foundation 243
Figure 14-4.—Rock bolt installation on downstream abutment as part of overtopping protection 244
Figure 14-5.—Epoxy coated rock bolts 248
Figure 15-1.—Overtopping of Gibson Dam in 1964 by about 3 feet 256
Figure 15-2.—Definition sketch for parameters of a free falling jet into a plunge pool 257
Figure 15-3.—Variation of mean dynamic pressure coefficient versus ratio of pool depth to jet impact diameter 259
Figure 15-4.—Probability that erosion will occur based upon the available flow energy or stream power and the characteristics of the rock in terms of the erosion index. Probability of erosion by logistic regression for Annandale's regression line. 265

Tables

No. *page*
Table 5-1. Design coefficients for plain gabion steps 100
Table 6-1. Properties of grass channel linings having good uniform stands of each cover 122
Table 6-2.—Typical grass mixtures, in percent 128
Table 7-1.—Maximum permissible flow rates through a downstream rockfill 144
Table 8-1.—Coefficients for riprap design equations. 159
Table 10-1.—Summary of design limits for overtopping protection systems 193
Table 15-1.—Modified joint set number values 261
Table 15-2.—Joint roughness number 261
Table 15-3.—Joint Alteration Number 263
Table 15-4.—Determination of J_s 264
Table 16-1 Summary of concrete dam overtopping protection case histories 271

Abbreviations and Acronyms

AB	articulating block
ACB	articulating concrete block
ACI	American Concrete Institute
ANCOLD	Australian National Committee on Large Dams
AOS	apparent opening size
ARS	Agricultural Research Service
ASCE	American Society of Civil Engineers
ASDSO	Association of State Dam Safety Officials
ASR	alkali-silica reaction
Caltrans	California Department of Transportation
CCM	cellular concrete mat
CCS	cellular confinement system
CCTV	closed circuit television
CIRIA	Construction Industry Research and Information Association
CMU	concrete masonry unit
CRB	Consultant Review Board
CRCP	continuously reinforced concrete pavement
CRCS	continuously reinforced concrete slab
CSPE	chlorosulfimated polyethylene
CSU	Colorado State University
DTHM	double twisted hexagonal mesh
EPDM	ethylene propylene diene monomer
F	Fahrenheit
FAO	Food and Agriculture Organization
FEMA	Federal Emergency Management Agency
FHWA	Federal Highway Administration
GERCC	grout-enriched” RCC mix
HCFCD	Harris County Flood Control District
HCR	Hydraulic Conductivity Ratio
HDPE	high density polyethylene

ICODS	Interagency Committee on Dam Safety
ICOLD	International Commission on Large Dams
IDF	Inflow design flood
LLDPE	linear low density polyethylene
LNEC	National Civil Engineering Laboratory (Lisbon)
MCE	maximum credible earthquake
MSA	maximum size aggregate
NCMA	National Concrete Masonry Association
NEPA	National Environmental Policy Act
NDSP	National Dam Safety Program
NDSRB	National Dam Safety Review Board
NRCS	Natural Resources Conservation Service
PCA	Portland Cement Association
PDF	portable document format
PGR	partially-grouted riprap
PMP	probable maximum precipitation
PMF	probable maximum flood
PP-R	reinforced polypropylene
PVC	polyvinyl chloride
Reclamation	Bureau of Reclamation
RCC	roller-compacted concrete
SOP	Standing Operating Procedures
UCS	uniaxial compressive strength
USACE	United States Army Corps of Engineers
USDA	United States Department of Agriculture
USDOT	United States Department of Transportation
USFS	United States Forest Service
USGS	U.S. Geological Survey
USSD	United States Society on Dams
UV	ultraviolet

Conversion Factors

To the International System of Units (SI) (Metric)

Pound-foot measurements in this manual can be converted to SI measurements by multiplying by the following factors:

Multiply	By	To obtain
acre-feet	1233.489	cubic meters
cubic feet	0.028317	cubic meters
cubic feet per second	0.028317	cubic meters per second
cubic inches	16.38706	cubic centimeters
cubic yards	0.764555	cubic meters
degrees Fahrenheit	(°F-32)/1.8	degrees Celsius
feet	0.304800	meters
feet per second	0.304800	meters per second
gallons	0.003785	cubic meters
gallons	3.785412	liters
gallons per minute	0.000063	cubic meters per second
gallons per minute	0.063090	liters per second
inches	2.540000	centimeters
miles	1.609344	kilometers
pounds	0.453592	kilograms
pounds per cubic foot	16.01846	kilograms per cubic meter
pounds per square foot	4.882428	kilograms per square meter
pounds per square inch	6.894757	kilopascals
pounds per square inch	6894.757	pascals
square feet	0.092903	square meters
square inches	6.451600	square centimeters

ASTM Standards

ASTM Standard	Title
A974	Standard Specification for Welded Wire Fabric Gabions and Gabion Mattresses (Metallic Coated or Polyvinyl Chloride (PVC) Coated
A975	Standard Specification for Double–Twisted Hexagonal Mesh Gabions and Revet Mattresses (Metallic-Coated Steel Wire or Metallic-Coated Steel Wire With Poly(Vinyl Chloride) (PVC) Coating)
C88	Standard Test Method for Soundness of Aggregates by Use of Sodium Sulfate or Magnesium Sulfate
C127	Standard Test Method for Density, Relative Density (Specific Gravity), and Absorption of Coarse Aggregate
C131	Standard Test Method for Resistance to Degradation of Small-Size Coarse Aggregate by Abrasion and Impact in the Los Angeles Machine
D413	Standard Test Methods for Rubber Property—Adhesion to Flexible Substrate
D751	Standard Test Methods for Coated FabricsC666 Standard Test Method for Resistance of Concrete to Rapid Freezing and Thawing
D 1241	Standard Specification for Materials for Soil-Aggregate Subbase, Base, and Surface Courses
D 4354	Standard Practice for Sampling of Geosynthetics for Testing
D 4759	Standard Practice for Determining the Specification Conformance of Geosynthetics
D5101	Standard Test Method for Measuring the Filtration Compatibility of Soil-Geotextile Systems
D5567	Standard Test Method for Hydraulic Conductivity Ratio (HCR) Testing of Soil/Geotextile Systems

D6684	Standard Specification for Materials and Manufacture of Articulating Concrete Block (ACB) Revetment Systems
D 6884	Standard Practice for Installation of Articulating Concrete Block (ACB) Revetment Systems
D7276	Standard Guide for Analysis and Interpretation of Test Data for Articulating Concrete Block (ACB) Revetment Systems in Open Channel Flow
D 7277	Standard Test Method for Performance Testing of ACB Revetment Systems for Hydraulic Stability in Open Channel Flow
G7	Standard Practice for Atmospheric Environmental Exposure Testing of Nonmetallic Materials
G147	Standard Practice for Conditioning and Handling of Nonmetallic Materials for Natural and Artificial Weathering Tests

Websites

The following websites can provide additional information and publications related to dams and overtopping protection:

American Society of Civil Engineers: http://www.asce.org

American Society of Civil Engineers Publications: http://www.pubs.asce.org

Association of State Dam Safety Officials: http://www.damsafety.org

Bureau of Reclamation: http://www.usbr.gov

Bureau of Reclamation Publications:
http://www.usbr.gov/pmts/hydraulics_lab/pubs/index.cfm

Canadian Dam Association: http://www.cda.ca

Federal Emergency Management Agency:
http://www.fema.gov/plan/prevent/damfailure

Federal Emergency Management Agency Publications:
http://www.fema.gov/plan/prevent/damfailure/publications.shtm

Federal Energy Regulatory Commission:
http://www.ferc.gov/industries/hydropower.asp

International Commission on Large Dams: http://www.icold-cigb.org

Mine Safety and Health Administration: http://www.msha.gov

National Performance of Dams Program: http://npdp.stanford.edu

Natural Resources Conservation Service: http://www.nrcs.usda.gov

Natural Resources Conservation Service Publications:
http://directives.sc.egov.usda.gov

U.S. Army Corps of Engineers: http://www.usace.army.mil

U.S. Army Corps of Engineers Publications:
http://www.usace.army.mil/publications

U.S. Department of Agriculture: http://www.ars.usda.gov

United States Society on Dams: http://www.ussdams.org

Introduction

Inadequate spillway capacity is a common problem with many dams. Thousands of dams throughout North America have been determined to have inadequate spillway capacity and would be overtopped during the inflow design flood (IDF), which is often equated to the probable maximum flood (PMF) or to some frequency flood associated with a particular return period. The PMF is defined as the flood that may be expected from the most severe combination of critical meteorologic and hydrologic conditions that are reasonably possible in the drainage basin under study (Federal Emergency Management Agency [FEMA], 2004). Reservoir inflow from storm events which exceeds the available storage and/or spillway discharge capacity can result in the dam being overtopped. Dam failure from overtopping can lead to a potential for loss of life and significant downstream damages.

Many early dams were designed to accommodate floods based on the largest experienced local flood or a standardized PMF considered appropriate at that time. Over the years, significant technological and analytical advances have led to better watershed and rainfall information, improvements in the analysis of extreme floods, and tools for evaluating hydrologic events in a risk-based context, which have resulted in the reclassification of some dams as being hydrologically deficient (Richards et al., 2013). Guidance for the evaluation of the hydrologic safety of dams, including guidelines for determination of the IDF for both new and existing dams, is provided by FEMA's new manual, *Selecting and Accommodating Inflow Design Floods for Dams* (FEMA, 2013).

This document assumes that a hydrologic deficiency exists at a dam and that traditional approaches to safely accommodate a larger design flood have first been investigated. Designers and dam safety personnel should fully evaluate all options available when dam overtopping is a possibility. While choosing an alternative that avoids flow over the top of the dam has clear engineering benefits, providing project-specific protection during dam overtopping can be a viable method in some instances to safely convey large flows downstream from the dam. Overtopping protection should generally be reserved for situations with some combination of very low annual probability of occurrence (e.g., 1 in 100), physical or environmental constraints on constructing other methods of flood conveyance, and prohibitive cost of other alternatives, or where downstream consequences of dam failure are demonstrated to be low.

A major concern with overtopping protection is that if the protection fails during a flood event and the underlying embankment is exposed, erosion and headcutting in the embankment materials could progress rapidly. This could lead to a breach of the dam during the flood event, with no potential for preventing the failure. A careful analysis of all potential failure modes for the dam and appurtenant features

must be performed for both the existing (baseline) conditions and for the proposed modified conditions.

Where applicable, overtopping protection may involve all or a portion of the dam crest. This may be more cost effective than constructing an auxiliary spillway on either abutment at dams where increased hydraulic capacity is required. However, this depend upon many factors, including the site conditions; dam characteristics; magnitude, depth, and duration of the overtopping flow; and the type of overtopping protection selected.

Techniques used to analyze the impacts of overtopping on embankment and concrete dams differ greatly. Hence, the protection alternatives available to accommodate overtopping also differ. The following provides a brief discussion of the overtopping protection alternatives presented in this manual:

***Part 1* (Embankment Dams).**—These chapters provide general guidance on the design and construction considerations, site implications, depth and duration factors, and vulnerabilities associated with the overtopping protection alternatives for embankment dams. Chapters addressing overtopping protection for embankment dams are:

> *Chapter 1 (General Considerations)*.—One of the most common deficiencies for embankment dams is inadequate spillway capacity. Economical methods to significantly increase the hydraulic capacity of such facilities are needed to preserve dam safety. Before considering any type of overtopping protection for an existing dam, site investigations and analyses should be performed as described in Chapter 1.
>
> *Chapter 2 (Roller-Compacted Concrete and Soil Cement)*.—Roller-compacted concrete (RCC) combines a mix of sand, gravel, and cement, while soil cement is formed by creating a mix of soil and cement. Both of these materials can be applied using typical earth moving equipment and are generally placed in horizontal lifts. A higher percentage of cement is typically required for RCC in order to achieve its greater compressive strength. Thus, RCC provides a more rigid and durable form of protection and many embankment dams throughout the nation have been armored using RCC. For guidance on the use of RCC and soil cement, see Chapter 2.
>
> *Chapter 3 (Conventional or Mass Concrete)*.—Conventional or mass concrete protection systems rely on a continuous layer of concrete to serve as the flow surface for overtopping flows. The concrete layer protects the underlying embankment from high velocity flows discharging along the downstream face of the dam. Training walls may be required at the sides of the overtopping protection to contain the overtopping flows and to

protect the dam abutments. For guidance on the use of conventional or mass concrete, see Chapter 3.

Chapter 4 (Precast concrete blocks).—Many types of precast concrete blocks are used for overtopping protection, each with its own geometry, useful applications based upon hydraulic performance and erosion prevention, installation procedures, aesthetic value, and cost. Proper selection requires a product that has been extensively tested under the flow conditions anticipated during overtopping. For guidance on the use of precast concrete blocks, see Chapter 4.

Chapter 5 (Gabions).—Gabions are wire baskets encasing uniformly-graded stone. The dimensions of the wire basket vary in size, and gradation of the stone may vary according to the type of application. Gabions typically require anchorage into the embankment and should only be considered for low head and flow depth applications. For guidance on the use of gabions, see Chapter 5.

Chapter 6 (Vegetative Cover, Turf Reinforcement Mats, and Synthetic Turf Revetments).—Vegetation provides an inexpensive and aesthetically pleasing alternative, if the expected hydraulic conditions at the site do not exceed the erosive limitations of the vegetation. Various types of vegetative covers and turf reinforcement mats, including synthetic turf, have demonstrated effectiveness in preventing exposure of bare soil to low overtopping flows of limited duration. For guidance on the use of vegetative cover, turf reinforcement mats, and synthetic turf revetments, see Chapter 6.

Chapter 7 (Flow-Through Rockfill and Reinforced Rockfill).—Some rockfill dams have been designed to withstand both overtopping and flow-through conditions. Reinforcement can be incorporated into rockfill to hold the surface rock particles in place under overtopping and flow-through conditions. Improvement to the mass slope stability is an important benefit under flow-through conditions, but is secondary under overtopping conditions. The reinforcement is a system composed of two essential components: a mesh and anchoring. For guidance on the use of flow-through rockfill and reinforced rockfill, see Chapter 7.

Chapter 8 (Riprap).—A riprap layer on the downstream slope of an embankment dam can protect against the initiation of embankment erosion during overtopping flow up to the design flow characteristics (maximum depth and velocity) of the riprap size. Riprap is generally composed of uniform-sized, high quality crushed or quarried rock, or occasionally concrete rubble, dumped or manually placed over a suitable bedding layer, and may include a grout matrix. For guidance on the use of riprap, see Chapter 8.

Chapter 9 (Geomembrane Liners, Geocells, and Fabric-Formed Concrete).—Geomembranes and geocells are each a subset of a larger group of geosynthetic materials that are widely used in combination with other products to protect surfaces from erosion. Geosynthetic materials have a large number of uses in providing protection from dam leakage, reinforcement for dam raises, slope stabilization, and building roads on sandy or soft soils, in addition to erosion protection. However, geomembrane liners, geocells, and fabric-formed concrete appear to have very limited applications for overtopping flows. For guidance on the use of geomembrane liners, geocells, and fabric-formed concrete, see Chapter 9.

Chapter 10 (Summary).—The various overtopping protection alternatives for embankment dams presented in this manual are summarized in Chapter 10.

***Part 2 (Concrete Dams)*.**—These chapters provide general guidance on the design and construction considerations, site implications, depth and duration factors, and vulnerabilities associated with the overtopping protection alternatives for concrete dams. Chapters addressing overtopping protection for concrete dams are:

Chapter 11 (General Considerations).—This chapter provides an overview of the different overtopping protection systems and their design considerations for concrete dams. A summary of key overtopping case histories (including examples of overtopping that either led to dam failure or resulted in the dam surviving) for concrete dams is provided. Basic hydraulic equations for evaluating the flow characteristics for overtopping flows are included.

Chapter 12 (Roller-Compacted Concrete).—RCC has been used to buttress concrete dams and to provide foundation protection from overtopping flow. For guidance on the use of RCC, see Chapter 12.

Chapter 13 (Conventional or Mass Concrete).—Conventional or mass concrete has been used to buttress concrete dams and to provide abutment and foundation protection from overtopping flow. For guidance on the use of conventional or mass concrete, see Chapter 13.

Chapter 14 (Foundation and Abutment Reinforcing).—Various methods of rock anchoring can be used to stabilize abutments and foundations during exposure to overtopping flow. For guidance on the use of foundation and abutment reinforcing, see Chapter 14.

Chapter 15 (Abutment and Plunge Pool Erosion Potential).—Overtopping flow can act as a free falling jet that impacts the downstream dam abutments, dam foundation, and downstream channel. The overtopping

flow will enter the tailwater below the dam (either created naturally or through the excavation of a plunge pool) and may disperse before impinging on the rock surface. If an adequate tailwater pool depth is provided, then insufficient energy will remain to erode the rock material on the sides or base of the pool. If not, scour may occur depending upon the rock materials. For guidance on abutment and plunge pool erosion potential, see Chapter 15.

Chapter 16 (Summary).—The various overtopping protection alternatives for concrete dams presented in this manual are summarized in Chapter 16.

Part 1: Embankment Dams

Chapter 1. General Considerations for Embankment Dams

The National Dam Safety Program (NDSP) was first implemented in the late 1970s. The NDSP, which is led by FEMA, is a partnership of States, Federal agencies, and other stakeholders established to encourage individual and community responsibility for dam safety. One of the most common deficiencies identified for embankment dams was inadequate spillway capacity. This was due to new design criteria for IDFs, new regulatory standards, and in many cases, changes in hazard classifications due to downstream development. The spillway capacity that was required for many dams was found to be significantly greater than the capacity of the existing spillways.

Various Federal and State agencies have different systems for rating the hazard potential of dams. Each of the hazard potential classification systems groups dams into categories based on the potential for loss of life and downstream damage in the event of failure. The hazard potential classification does not reflect in any way on the current condition of the dam itself (i.e., safety, structural integrity, or flood routing capacity), but rather on the conditions downstream of the dam. FEMA has a hazard classification system that is clear and concise, and this system was adopted for the purposes of this manual. The reader is directed to FEMA 333, *Federal Guidelines for Dam Safety: Hazard Potential Classification Systems for Dams* (FEMA 2004), for a complete description of their system. The FEMA document uses three hazard potential levels to classify dams. These levels are summarized as follows:

- **Low hazard potential.**—Dams assigned the low hazard potential classification are those where failure or misoperation results in no probable loss of human life and low economic and/or environmental losses. Losses are principally limited to the dam owners' property.

- **Significant hazard potential.**—Dams assigned the significant hazard potential classification are those dams where failure or misoperation results in no probable loss of human life, but can cause economic loss, environmental damage, or disruption of lifeline facilities, or can impact other concerns. Significant hazard potential classification dams are often located in predominantly rural or agricultural areas, but could be located in areas with significant population and infrastructure.

- **High hazard potential.**—Dams assigned the high hazard potential classification are those where failure or misoperation will probably cause loss of human life.

The guidance in this manual is intended to be technically valid without regard to the hazard potential classification of a particular dam. However, some design measures that are commonly used for the design of high and significant hazard potential dams may be considered overly conservative for use with low hazard potential dams; and conversely, some overtopping protection alternatives may not be appropriate for high and significant hazard potential applications. The selection of any overtopping protection system for final design must give strong consideration to the potential risk of failure of the protection system and resulting consequences of potential failure of the dam.

Typically, the required IDF for a spillway ranges up to the full PMF for high hazard potential dams. This results in very large peak flows using present day hydrometeorological standards. Erosion and instability resulting from overtopping flow is a principal cause of embankment dam failure (Powledge and Pravdivets, 1994). As a result, economical methods to significantly increase the hydraulic capacity of such facilities were needed to preserve dam safety (Portland Cement Association [PCA], 2002).

A decision to use dam overtopping protection in place of improving the service spillway, constructing an auxiliary spillway, raising the dam crest, or imposing a reservoir restriction should only be made with careful consideration of all potential impacts. The designer should always check the applicable policies and guidelines of the Federal and State regulatory agencies involved regarding overtopping protection of embankment dams. Some States may not allow any form of embankment overtopping protection (such as California) while other States may have restrictive criteria that must be followed.

Understanding the behavior of an embankment dam during an overtopping event provides a basis for the design of protective measures. Flow over an embankment dam, as shown in Figure 1-1, generally proceeds from a subcritical velocity over the upstream portion of the crest, through critical velocity on the crest and supercritical velocity across the remainder of the crest, to accelerating turbulent flow on the downstream slope. The hydraulics of overtopping flows in terms of unit discharge, depth, and velocity can be estimated by conventional open-channel flow theories. The unit discharge of the overtopping flow, q, in $ft^3/s/ft$, is a function of the overtopping depth, H, in feet, as follows (Equation 1-1):

$$q = C\,H^{1.5} \qquad \textbf{Eq. 1-1}$$

Where:

C = a discharge coefficient dependent upon the geometry of the embankment and the depth of flow.

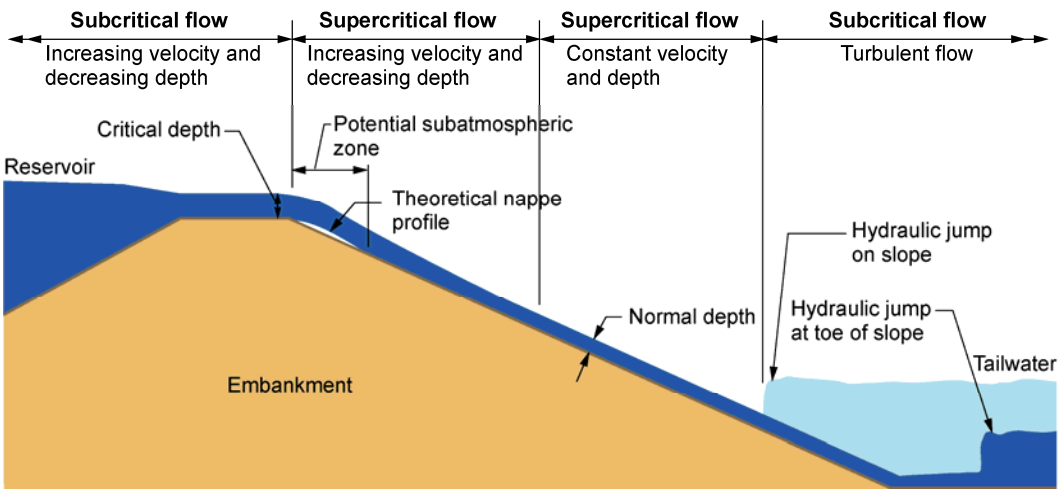

Figure 1-1.—Typical hydraulic conditions during embankment overtopping (Reclamation).

Dam overtopping flow is normally compared to broad-crested weir flow with a sloping approach. Near parallel flow will occur across the dam crest when the ratio of the overtopping depth (H) to the crest length in the direction of flow (L) is between 0.08 and 0.33, and critical depth will occur within the downstream third of the crest. The exact location of critical depth on the crest will be dependent upon the crest profile and the relative roughness of the crest surface. Beyond the critical depth location, flow depth and pressure profiles will decrease from hydrostatic pressure as the flow begins curving toward the slope beyond the downstream edge of the crest, or crest brink, where separation of the nappe occurs. When H/L is less than 0.08, the roughness of the crest surface may cause undulating flow and surface erosion. When H/L is greater than 0.33, the control will shift toward the upstream edge of the crest and may spring free, producing an upstream flow cavity. Sharp-crested weir flow will occur for H/L ratios greater than 3.0 (Dodge, 1988).

Laboratory tests of overtopping flow for various embankment slopes indicated scour started near the top of the slope just below the crest brink. Although the scour progressed down the embankment slope over time, the majority of the damage occurred on the upper half of the embankment. Studies indicated the pressure head on the embankment crest decreased rapidly from the location of critical depth to the brink. The ratio of the brink depth to the critical depth decreased with increasing slope, from 0.729 for a 4:1 slope to 0.674 for a 2:1 slope, reflecting an increase in pressure gradient at the brink. Large pressure gradients at the brink could produce erosion of the dam embankment or failure of an overtopping protection system. Increasing the embankment slope also reduced the pressure heads recorded at the brink, with negative pressures recorded for a 2:1 slope with a unit discharge of 2 $ft^3/s/ft$ or greater. The lowest pressures were recorded within 0.5 feet downstream of the crest brink (Dodge, 1988).

Slope stability equations by the limit equilibrium method can be extended to include the effects of surface tractive forces and pressures resulting from overtopping flows on an embankment dam. An analysis method for estimating the potential for deep-seated slope instability of an embankment dam during overtopping is provided by Chugh (1992).

Miller and Ralston (1987) evaluated several case histories of embankment dams being overtopped, with the following conclusions related to performance:

- Uniform vegetation can generally provide some protection for shallow overtopping depths (up to about 1 foot) for short durations of a few hours, especially on clayey, compacted soil surfaces
- Granular rockfill materials at the embankment toe may be more easily eroded and cause undermining of a more resistant cohesive fill
- High tailwater reduces the head differential on the embankment and can reduce erosion
- Interruptions to a smooth downstream slope surface (e.g., a change in slope [either from steeper to flatter, or from flatter to steeper] or a projecting structure, berm, roadway, or abutment groin) produce turbulence which can initiate erosion and accelerate breaching
- Flow concentrations due to elevation changes along the embankment crest (generally caused by camber or by crest settlement) can initiate erosion
- Flatter embankment slopes have greater resistance to erosion

1.1 *Embankment Dam Overtopping Protection Considerations*

Embankment dam overtopping protection has been found in some cases to be a practical and cost-effective method for providing additional spillway capacity to convey large, infrequent floods at existing dams with inadequate spillway capacity. However, a decision to use overtopping protection in place of spillway improvements, a reservoir restriction, dam crest raise, or auxiliary spillway construction cannot be made lightly. Overtopping protection should not be considered as a low-cost substitute for a service spillway, especially where frequent use, high unit discharge, or high head is a design requirement, or where the structure impounds a substantial volume of water and downstream consequences in the event of failure would be significant. Overtopping protection is generally discouraged for use on new embankment dams due to settlement concerns, unless they can be addressed in the design and no other practical alternatives exist. Most embankment dam overtopping protection features serve as

an auxiliary spillway[1], with service spillways provided to pass the more frequent floods. When planning to use embankment dam overtopping protection as an auxiliary spillway, the designer should consider the limitations and risks of conveying spillway flow over an earthen embankment. Important engineering design considerations include:

- Significant quantities of concentrated flowing water may be introduced over erodible materials, such as an earthen embankment or foundation material at the abutment contacts.
- Higher static loading on an embankment dam may result in slope failure.
- Uncontrolled leakage from the overtopping protection could cause embankment erosion and instability.
- Debris carried in the flood flows may damage the overtopping protection.
- Numerous overtopping protection projects have been constructed, but few have seen significant use—and none has been tested for full design flood conditions.
- Overtopping protection typically involves a significant change to the visual appearance of the structure.

When larger spillway capacity is required for an existing dam, the hydraulic capacity of the existing service spillway should generally be maintained before operation of an embankment overtopping spillway. For example, if an existing service spillway is capable of passing a 500-year flood without overtopping the dam, then the planned overtopping protection would generally not be designed to begin operation more frequently than the 500-year flood event. However, if the embankment crest must be lowered to accommodate the overtopping protection, the overtopping protection may experience flows before the original design capacity of the service spillway is achieved. This can potentially change the downstream risks to affected properties as well as the potential liabilities due to flooding, and this lowering should only be considered for infrequent events. At a minimum, the outflow conditions should usually not be increased for events more frequent than a 100-year flood event (PCA, 2002). This is intended to ensure a low probability of occurrence and avoid potential impacts on flood insurance within the 100-year floodplain. The need to assess upstream and downstream flooding conditions should be evaluated for each project. Environmental impacts must be evaluated in compliance with the National Environmental Policy Act (NEPA) and in accordance with applicable Federal and State regulatory requirements.

[1] The term "emergency spillway" is discouraged, to avoid the implication that an emergency exists when its use is required (FEMA, 2013).

If an auxiliary spillway is to be located on the dam as embankment overtopping protection, flow from the auxiliary spillway should be directed to the downstream channel and away from the toe of the dam to reduce the risk of erosion of the dam embankment during an overtopping event. The embankment dam overtopping protection should be designed so that the abutment groins and toe of the dam are protected from localized erosion caused by flow concentrations and by high velocity flow. Hydraulic analyses should be performed to determine the characteristics of the overtopping flow, including: flow velocity, depth, and type (laminar or turbulent, supercritical or subcritical), slope changes and discontinuities, and the energy dissipation requirements at the downstream toe.

Channel erosion downstream of embankment dam overtopping protection can also have a critical impact on the stability of the embankment and can cause high seepage gradients at the toe of the dam. If erosion at the toe of the dam is expected to occur during overtopping, the eroded conditions should be evaluated in both the embankment stability and embankment seepage analyses. These critical stability and seepage conditions must be considered in the design of the overtopping protection system.

The construction of overtopping protection on an embankment dam could also impact the long-term stability of the embankment. An impermeable structure on the downstream slope of an embankment dam can block existing seepage paths and thereby increase the phreatic surface and decrease embankment stability. Furthermore, any reductions to the embankment cross-section can decrease the factor of safety for slope stability, especially due to excavation required during construction. Excavation at the toe of the embankment to construct the various features of the overtopping protection system, in particular to construct a downstream stilling basin or for over-steepening of the downstream slope, will change the stability of the overall embankment. An evaluation of the estimated potential risks of dam failure during construction, in addition to long-term impacts, should be performed as part of the design of overtopping protection for an embankment dam. Any excavation of the existing dam crest may increase the potential for dam overtopping during construction, which should be considered in the final design. A reservoir level restriction, temporary cofferdam, or construction requirement to avoid the rainy season may be necessary to ensure adequate protection against potential hydrologic construction risks.

1.2 *Site Investigations and Analyses for Overtopping Protection*

1.2.1 *Preliminary Studies*

Before designing overtopping protection for an existing dam, the impact of the proposed modifications on the embankment dam and downstream conditions must be evaluated. Site reconnaissance and investigations will be needed to understand

the conditions of the embankment, foundation, and downstream area and to develop appropriate geotechnical parameters for:

- Analyzing embankment slope stability and seepage conditions
- Estimating the bearing capacity of the foundation
- Providing analysis of filter compatibility
- Predicting settlement or heave

Available information should be reviewed to develop an understanding of how the dam was constructed and how it has performed. This can include design and construction drawings, construction records and photographs, records of inspections, and reviews by dam owners or jurisdictional agencies. In some cases, there may be substantial structure performance data from instrumentation programs. Instrumentation will usually include monitoring of the phreatic surface within the dam, seepage measurements, and surface movements (both vertical and horizontal). Instrumentation requirements for the modified embankment must be addressed for final design. Visual observations can also provide considerable information on the past performance of the dam. High water levels, seepage, settlement, and shear displacement generally leave surface expressions that can be observed during a site reconnaissance.

1.2.2 *Subsurface Investigations*

Subsurface investigations are used to determine subsurface strata and water levels in the embankment and foundation and to collect samples for laboratory testing. Of particular interest are the subsurface materials and water levels (or phreatic surface) in the downstream slope of the embankment and in the dam foundation at the downstream toe. The scope of investigation usually includes drilling of test holes and/or excavating test pits, with associated logging and sampling. Logging and sampling are needed to classify the soils encountered, and samples are needed for laboratory testing. The amount of investigation required can vary considerably depending on the size of the project, the subsurface conditions at the site, and the availability of information from previous investigation and construction records.

The scope of the subsurface investigations should be planned and implemented under the direction of a qualified geotechnical engineer experienced in dam design. Test holes and test pits can be excavated to shallow depth by hand and to greater depths by drill rigs or excavators. Test hole and test pit locations and depths should be selected to sample embankment and foundation material where the overtopping structure and appurtenant facilities are planned. Test pits should be backfilled properly following sampling and logging, and test holes may either be grouted or developed into observation holes by using instruments such as a standpipe piezometer or an inclinometer. Geophysical methods such as ground

penetrating radar and electrical resistivity may also apply to an overtopping protection investigation.

Subsurface investigations may be needed to confirm the location, type, and condition of buried drainage systems within an existing dam. Drainage systems can include granular drains and filters, geotextiles, and drain pipes. Subsurface investigations should be conducted in such a way that existing features are maintained, without significant impact. Granular drains and filters can be evaluated by test holes and test pits, with careful logging and sampling. Geotextiles can be evaluated by partial excavation, if needed, to obtain a sample for testing. Drain pipes can be evaluated by probing and by visual inspection using remotely operated camera surveys inside the pipe. Any underground utilities within the dam foundation and downstream area should also be identified and located.

Permeability tests may be required for seepage analyses of the existing embankment or foundation, to evaluate dewatering needs during construction and for the design of permanent seepage control measures. Permeability measurements can be made from test holes as well as from limited field samples prepared and tested in the laboratory. Other tests such as consolidation testing including time-rate measurements, direct-shear or triaxial-shear testing for shear strength, chemical testing to determine potential effects of the aggressiveness of the soil on degradation of concrete and corrosion of steel, and dispersion tests to evaluate the potential for internal soil erosion may be desirable for some projects.

1.2.3 *Slope Stability Analyses*

An important aspect of constructing an auxiliary spillway on an embankment is the stability of the foundation. Slope stability analysis may be required to evaluate whether an existing structure will have an acceptable factor of safety against slope failure both during and following construction. Foundation analyses may also be required to evaluate other potential modes of failure related to bearing capacity, settlement or heave, and overturning or sliding of retaining walls, or potential scour at the downstream toe. For most projects, standard analysis methods should be adequate; however, certain projects may require more sophisticated models, such as finite element or finite difference models of deformation. For cases where the overtopping protection will not create significant changes to loading or water levels within the dam, computer-based slope stability analysis may not be required.

Slope stability analyses for an embankment dam consist of five primary steps (PCA, 2002):

1. Characterizing the geometry of the slope and material boundaries

2. Evaluating the material properties for each type of material in the embankment and foundation

3. Evaluating internal and external water pressure and loading or seepage conditions

4. Inputting geometry, material properties, and water pressures in a model for analysis of slope stability

5. Solving for the minimum theoretical factor of safety

Input parameters for slope stability analyses include: material boundaries, water pressures or phreatic surface levels, material unit weights, and material strengths. Water pressure and material strength parameters are most important because they can have a significant effect on the calculated factor of safety. Standard loading conditions for embankment dams include: end-of-construction, steady-state seepage for normal pool conditions, steady-state seepage at flood pool, steady-state seepage earthquake loading conditions, and rapid drawdown. Unlike many construction materials, the strength of soil is highly dependent on the loading conditions. Strength parameters which represent the cohesion and friction angle of a material are generally appropriate for a slope stability analysis. The analysis should consider that the overtopping protection may act as a barrier to evaporation and seepage, and that the phreatic surface may increase as a result.

1.2.4 *Foundation Analyses*

Embankment and structure modifications associated with overtopping protection may require foundation analysis for design. Volume change in foundation soil can occur in response to changes in loading, water content, or weather. Although most overtopping protection will result in only nominal changes in loading, there may be changes in water content and phreatic surface within the embankment that could have adverse impacts if they are not considered in the design. These adverse impacts may include cracking, offsets, uplift, and/or disruption of the overtopping protection and exposure of the underlying embankment. Shaking due to seismic loading may produce consolidation of an uncompacted or loose foundation. The degree of volume change is most significant in certain types of soils and conditions.

Consolidation and settlement can occur gradually, over several months or years. Consolidation and settlement will generally be significant where soft, normally consolidated or slightly overconsolidated clayey soil comprises the foundation, and for uncompacted rockfill. In such cases, even light loads can cause enough settlement to contribute to cracking and structural distress. Where possible, excavation and replacement of soft clayey soils should be considered. Where this is not possible or practical, it may be desirable to include load compensation in the design.

Settlement can also occur as a result of collapse from wetting. This should be considered—especially where silty and sandy soil are at relatively low density and are dry or unsaturated. Collapse can sometimes be induced prior to

constructing a structure by wetting and compacting the soil. However, the preferred approach would be to remove and replace soils that could collapse, if possible.

Foundation heave can result from the swelling of some types of clayey soil. Heave resulting from unloading of saturated clayey soil is generally not large, and—considering the limited amount of excavation associated with typical overtopping protection—is often insignificant. Heave resulting from increased moisture content in partially saturated clays and weathered claystone can represent a volume increase of 10 percent or more. The degree of heave can be reduced by compacting soil wet of optimum moisture content, and by maintaining a constant moisture content environment. Expansive clays (such as bentonite and montmorillonite) can swell to many times their original volume and should be avoided.

Frost heave can occur where soil within the frost depth (or the depth to which groundwater in the soil is expected to freeze, based on climatic conditions and soil properties) is moist or saturated. Frost heave is most significant in silty sand, where ice lens formation can cause heave of several inches. Uplift pressure from frost heave could be enough to crack or dislodge the overtopping protection and cause unsatisfactory performance. Free-draining soils with minimal amounts of fines and fine sands, and with significant amounts of coarse sand and gravel fractions, are least susceptible to frost heave, even if they are moist or wet, because the soil is permeable enough to allow water to flow away from ice as it forms, thereby minimizing volume change. Free-draining bedding material is recommended where conditions for frost heave exist.

Bearing capacity is generally not of significant concern for overtopping protection on embankment dams because of the light loads typically applied. Bearing capacity of the foundation can be evaluated using standard equations relating soil strength and unit weight, and the planned size and depth of the structure foundations.

1.2.5 *Seepage Analyses*

The overtopping protection design must be compatible with the seepage conditions resulting from a modification of the embankment dam. Seepage collection and control features are often required in the design of overtopping protection to:

- Collect and control seepage through the embankment or foundation under normal reservoir conditions
- Limit uplift pressures that could develop beneath the overtopping protection as a result of flood releases

- Collect and control infiltration of water through cracks and joints in the overtopping protection

Under normal reservoir conditions, seepage can develop through the embankment and foundation, as well as through the foundation beneath a spillway. If the overtopping protection provides a low permeability barrier to seepage, excess water pressures could build up beneath the structure and cause uplift damage, or redirect general embankment and foundation seepage to the locations of cracks or joints in the overtopping protection. This could result in higher seepage gradients at the cracks or joints, which could allow piping (or internal erosion) of the embankment and/or foundation soils to develop. Blockage of seepage exit points could also result in increased pore-water pressures in the embankment and foundation soils which in turn could decrease the stability of the embankment.

If the existing embankment or foundation includes adequate seepage collection and control features upstream of the location of the overtopping protection, then it may not be necessary to include seepage collection and control features in the design. For example, if an embankment includes an upstream chimney and blanket drain, then it is not likely that uncontrolled seepage would reach the underside of an overtopping protection structure. Similarly, if an embankment contains an effective clay core, seepage may not reach the downstream face where the overtopping protection would be constructed. However, the lack of visible seepage on the downstream slope of an existing dam may not be sufficient to conclude that a drainage system is not needed. The possibility exists that the amount of seepage that reaches the face is sufficiently small and evaporates into the open air, but could build up beneath a structure. If the overtopping protection is constructed downstream of existing seepage collection and control features, the design must include means for the discharge from those systems to safely pass through or around the structure. Field investigations and instrumentation readings should be used to confirm the actual seepage conditions in the embankment and foundation for design of overtopping protection using standard steady-state seepage analysis methods (PCA, 2002).

1.3 *Types of Overtopping Protection Systems for Embankment Dams*

Since 1983, extensive testing has been conducted in the United States, Great Britain, Spain, Portugal, Italy, and the former Soviet Union to develop alternatives for overtopping prote ction for embankment dams. Protection systems tested include roller-compacted concrete and soil cement, precast concrete block systems, rockfill, riprap, gabions, grass linings, and geosynthetic materials. Success and/or failure of the various systems is well documented in each case, and a review of available reports may help determine the most appropriate overtopping protection alternative for a particular project (ASCE, 1994). The

designer is cautioned to carefully review the test conditions and range of loadings evaluated for these tests, compared to those for a particular project.

General design considerations when selecting an overtopping protection system for a particular project may include:

- Unit discharge
- Maximum head on crest
- Embankment or drop height
- Embankment materials
- Downstream slope flow duration
- Flow velocity
- Shear stress
- Surface discontinuities that can lead to irregular hydraulic flow patterns or turbulence
- Potential for differential settlement
- Cavitation potential
- Erosion potential stagnation (or uplift) pressures
- Aesthetics
- Economics
- Potential for debris loads
- Durability (or resistance to corrosion abrasion and freeze-thaw damage)
- Energy dissipation
- Downstream channel conditions
- Downstream consequences
- Constructability
- Maintenance requirements
- Potential vulnerabilities (including terrorism and vandalism)
- Risks

These design considerations are addressed in the following chapters for each type of overtopping protection system and are used as a basis of comparison in Chapter 10 for all of the overtopping protection systems considered in this manual for embankment dams.

Overtopping protection systems for large, high hazard potential embankment dams require more rigorous and detailed analysis to ensure stability for higher unit discharges, drop heights, and flow velocities. Smooth, continuously-reinforced concrete deck systems (long in use for concrete-faced rockfill dams and highway pavements) have been evaluated for use as overtopping protection on the downstream face of embankment dams up to 200 feet high (see A.R. Bowman Dam case history in the Appendix). Stepped concrete overlay systems of roller-compacted concrete have been used to provide energy dissipation in addition to overtopping protection for embankment dams up to about 100 feet high. Cable-tied, precast concrete blocks have been used to provide overtopping protection for numerous embankment dams up to about 50 feet high.

Regardless of type, overtopping protection for embankment dams should be reserved for situations with a relatively low annual probability of occurrence, and for which conventional flood protection methods are cost prohibitive or could represent a greater risk than for the alternative selected. The policies and guidelines of applicable Federal and State regulatory agencies pertaining to embankment overtopping protection should be determined for relevant design criteria. Some States, such as California, do not allow any form of embankment overtopping, regardless of the method or approach.

Overtopping protection systems for embankment dams have been constructed using various types of construction materials. The following chapters describe the use of RCC and soil cement, conventional or mass concrete, precast concrete blocks, gabions, vegetative cover, turf reinforcement mats, synthetic turf revetments, flow-through rockfill, reinforced rockfill, riprap, and various types of geosynthetic materials as overtopping protection, including geomembrane liners, geocells, and fabric-formed concrete. Chapter 10 provides a summary of the overtopping protection alternatives for embankment dams presented in this manual and a general guide for their potential range of use.

Chapter 2. Roller-Compacted Concrete and Soil Cement

Roller-compacted concrete (RCC) and soil cement have been used in dam construction since the late 1970s. These materials are similar since they both have zero-slump consistency and are placed and compacted with equipment typical of earth-moving or paving operations. The use of RCC and soil cement usually results in a shorter construction schedule due to higher production rates compared to conventional or mass concrete construction. A shorter construction schedule minimizes the hydrologic risks involved with dam construction and allows the contractor to reduce contingency costs for potential flood damages. A detailed discussion of the similarities and fundamental differences between RCC and soil-cement is provided by Choi and Hansen (2005).

The terms "roller compaction" and "roller-compacted concrete" are defined by the American Concrete Institute (ACI, 2005) as follows:

> **Roller compaction:** A process for compacting concrete using a roller, often a vibratory roller.
>
> **Roller-compacted concrete:** Concrete compacted by roller compaction; concrete that in its unhardened state will support a roller while being compacted.

The development of RCC technology has provided a successful method of erosion protection of embankment dams, which has proven to be cost effective while affording a number of other advantages. RCC construction is normally very rapid compared to conventional concrete construction, with minimal project disruption. In most cases, construction for overtopping protection is limited to the dam crest and downstream slope, with little to no impact to reservoir operations. Depending upon the site conditions and discharge requirements, the entire length of the embankment dam can be used by armoring the crest and downstream face with RCC, or a selected portion of the embankment crest can be lowered for use as an RCC-lined spillway. However, lowering the embankment crest can potentially change the downstream flood risks and potential liabilities, and this lowering should be evaluated for each project.

RCC spillways generally consist of non-air-entrained concrete, without reinforcement, water-stopped joints, or anchorage, but with underdrain systems similar to conventional concrete spillways. For structures that impound water, such as earth embankments, designing RCC overtopping protection is generally limited to auxiliary spillways that would only operate for flood return periods of 100 years or greater (PCA, 2002). Greater return periods may be required

depending upon the downstream consequences. Conventional service spillways should generally be used for more frequent flood events.

RCC overtopping projects completed in the United States typically range in height from 15 to 65 feet (with a few up to about 100 feet), with the volume of RCC typically ranging from 1,000 to 60,000 yd^3. A list of completed RCC overtopping protection projects (including auxiliary spillways located on earth abutments) was prepared by Ken Hansen in 2013 and is shown in Attachment 1. The projects (for which information is available) average 44 feet high, with an average RCC volume of 10,000 yd^3, an average unit discharge of 80 ft^3/s per lineal foot of crest length, and an average design overflow depth (or head on crest) of 8 feet. The average cementitious materials content is 340 lb/yd^3 (including both cement and pozzolan) and the maximum size aggregate (MSA) most commonly used for RCC overtopping protection projects is 1-½ inches.

RCC has a wide application for use as overtopping protection since the material is suitable for a wide range of flow depths and velocities. Laboratory studies, full-scale tests, and field experience have all shown that, even at relatively low strengths and cementitious contents, RCC has exceptional resistance to erosion and abrasion damage from both high and low velocity flows, even at an early age (Schrader, 1995). RCC has an added advantage where debris lies within the drainage basin since it can generally resist captured debris impacts (such as trees, cobbles, and boulders) without significant damage and without causing severe irregularities in the hydraulic flow due to snagging of debris. Approximately 10 percent of the Natural Resources Conservation Service (NRCS) federally-assisted dams are expected to use RCC overtopping protection in the future to increase hydraulic capacity and meet dam safety standards (Hunt et al., 2008).

Soil cement is a mixture of water, cement, and natural soil, usually processed in a pugmill, mixed to a specific (or zero-slump) consistency, placed in lifts, and rolled with earth moving equipment to compact. Soil cement has smaller aggregate, lower strength properties, and lower abrasion resistance than RCC, and applications of soil cement are generally limited to those where strength and abrasion resistance considerations are not critical. Soil cement has most often been used as a low-cost paving material. Although limited in use, soil cement has been placed in layers on the upstream face of embankment dams to provide slope protection, most often where riprap is not readily available. Soil cement should generally not be considered for embankment overtopping protection for the following reasons:

- Lack of quality bonding between lifts (unless improved by the use of bonding mortar)
- Significant separation along lifts

- Thicker section compared to RCC (needed to resist potential uplift pressures, due to lack of bonded lifts)
- More shrinkage cracking than for RCC
- Less erosion resistance compared to RCC

One notable example of the use of soil cement for overtopping protection on an embankment is Alvin J. Wirtz Dam near Austin, Texas. The project required the placement of 160,000 yd^3 of soil cement to a maximum height of 105 feet in 1997. The final mix required 230 lb/yd^3 of cement and 230 lb/yd^3 of flyash, with a maximum aggregate size of only ¼-inch, to meet the design compressive strength requirement of 2,000 lb/in^2. A minimum in-place compacted dry density of 126 lb/ft^3 was specified for the soil cement, which was expected to provide satisfactory durability and bonding between lifts (King et al., 1997).

Unless otherwise indicated, the remainder of this chapter addresses the use of RCC for overtopping protection.

2.1 *Historical Perspective*

According to PCA, the method of providing an auxiliary spillway with a large flood capacity on an embankment dam, commonly referred to as overtopping protection, was first applied using RCC in the early 1980s at projects such as Ocoee Dam #2 in Tennessee, Brownwood Country Club in Texas, North Fork Toutle River in Washington, and Harris Park No. 1 and Spring Creek Dams in Colorado, where rapid construction and/or budget constraints were driving forces in identifying alternative designs. The cost effectiveness of RCC overtopping protection was proven in these early projects where the relatively high hauling, placement, and compaction production rates yielded lower unit costs than for conventional concrete spillways. Overtopping protection subsequently saw sporadic application in the following years, with a total of 11 projects constructed in the 1980s, and then continued to grow to 50 projects in the 1990s (Bass and Hansen, 1998). By 2007, RCC had been used as a spillway or overtopping protection for more than 130 dams (Abdo and Adaska, 2007). Attachment 1 provides a list of 109 completed RCC overtopping protection projects (including auxiliary spillways located on earth abutments, and one soil-cement project). (Hansen, 2013).

2.1.1 *Design and Analysis*

The PCA released the Design Manual for RCC Spillways and Overtopping Protection in 2002, from which much of the following information was taken. Updated information has been provided from more recent sources where indicated.

2.1.2 *Location*

RCC spillways can be located in three general areas:

(1) On an abutment separate from the dam embankment

(2) As overtopping protection over the entire dam ernbankment

(3) As overtopping protection over a portion of the dam embankment

Spillway location is one of the most important decisions of spillway design due to the potential implications for dam and public safety, as well as for hydraulics (including energy dissipation), aesthetics, cost, and maintenance. When determining the location of the spillway, the designer should give preference to a location that is separate from the dam embankment whenever possible, would not cause excessive erosion along the abutment groins or at the downstream toe, and is aligned with the downstream channel to minimize erosion and safely convey spillway releases away from the dam.

The width of RCC overtopping protection on an embankment dam is normally determined by both technical and economic considerations. Issues to consider when deciding the length of dam crest to be used for overtopping protection include:

- ***Energy dissipation.***—Wider overtopping protection can usually improve spillway performance by decreasing the depth of flow, decreasing the unit energy at the downstream end of the spillway, and increasing energy dissipation. Flood routings for various frequency floods are used to determine magnitudes and durations of spillway flows, and water surface profiles are used to calculate flow depths and velocities for design. Energy dissipation requirements become more important as the height of the dam and unit discharge increase. High-head and/or high-unit-discharge RCC spillway designs should generally be avoided or will need special design considerations. Maximum RCC applications to date have been for dam heights up to about 100 feet and for unit discharges up to about 340 $ft^3/s/ft$.

- ***Existing dam crest length***.—Extending the RCC overtopping protection across the entire crest of the existing dam, and down the abutment groins, can maximize the available spillway crest length and decrease the maximum reservoir water surface level. Conversely, the designer may want to limit the crest length of the overtopping protection to decrease the amount of flow along the abutment groins of the embankment, and to provide a better transition from the spillway channel to the natural channel. A narrow spillway may be preferable if the downstream channel is significantly narrower than the dam crest. A converging spillway can be used to provide a longer crest length and better fit a narrow downstream

channel, but may require consideration of the effects of wall convergence on spillway cross-waves and potential for wall overtopping, as well as the hydraulic performance of the downstream apron or stilling basin. The transition from the overtopping width to the downstream channel is also important for operation and maintenance.

- ***Cost.***—Wider overtopping protection usually increases the total RCC and conventional concrete volumes (where used for the overflow crest, formed steps, and stilling basin) which can result in a higher project cost. However, overtopping protection over a portion of a dam embankment will require the provision of sidewalls to contain the flow, normally of conventional concrete.

2.2 *Sloped chute*

The sloped chute is the portion of the spillway that conveys water down the face of the dam or abutment, from the crest to the stilling basin. RCC for the sloped chute is typically placed in horizontal lifts resulting in a stepped chute, as shown in Figure 2-1. RCC chute surfaces constructed in horizontal lifts can be constructed without formwork, or by using vertical forms to create a more pronounced stepped chute surface along the exposed edges. Stepped chutes can significantly increase the rate of energy dissipation on the downstream face of the dam compared to a smooth spillway that has the same slope. This can reduce the size of the energy dissipation structure (or stilling basin) and the potential for scouring the downstream channel and /or foundation material. Formed steps may consist of compacted RCC, grout-enriched RCC, or conventional concrete, and these formed steps are generally 1- or 2-feet high.

RCC for the sloped chute can also be placed parallel to the sloped surface, as shown in Figure 2-2. RCC placement parallel to the slope (called “plating”) has generally been considered for projects where the depth of overtopping is less than two feet, the duration of overtopping is short, and the slope is 3:1[2] or flatter. The RCC is placed directly against the filter/drain material on the embankment slope by operating the placing and compacting equipment up and down or across the slope. Winching may be necessary to operate the spreading equipment and the vibrating rollers on downstream slopes steeper than 3:1. This method normally requires considerably less material than the stepped RCC overlay method; however, unit costs are generally higher because of the more difficult placing procedure. Additionally, the energy dissipation and resistance to uplift pressure would be reduced when compared to RCC placed in horizontal lifts. One plating application was on the Toutle River where a primary design consideration was to allow debris from eruptions from Mount St. Helens volcano to flow through the spillway structure.

[2] Ratio of horizontal (H) to vertical (V).

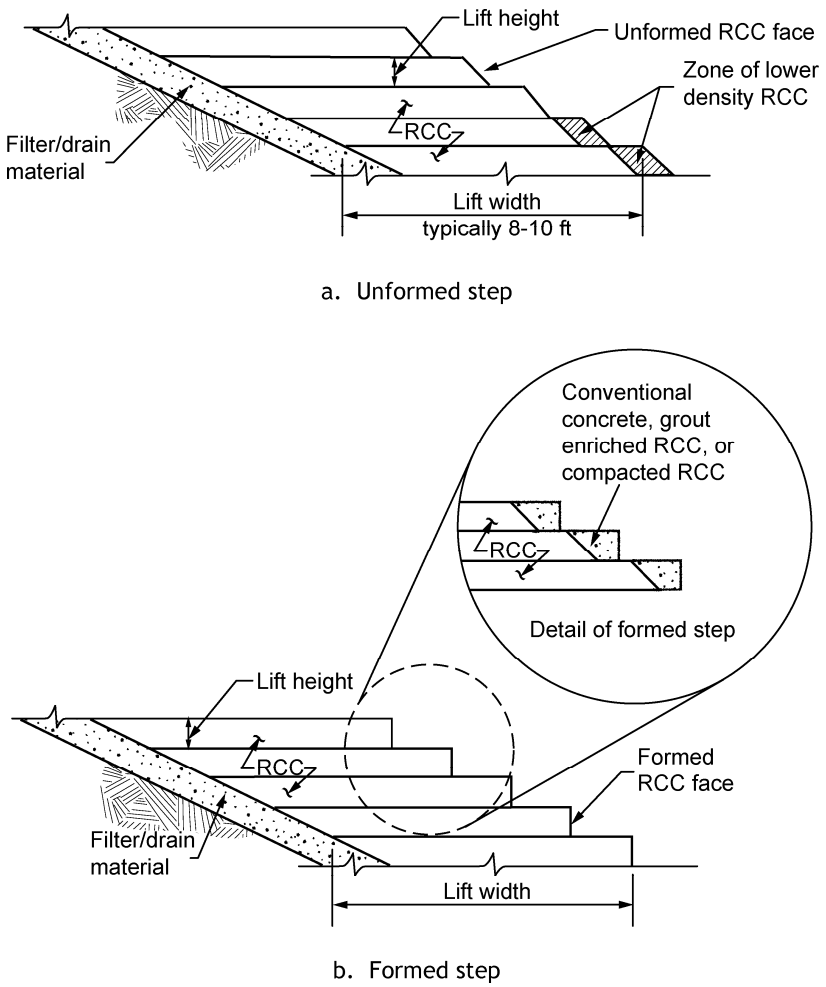

Figure 2-1.—Downstream slope geometry of RCC overtopping section (PCA, 2002, reprinted courtesy of PCA, all rights reserved).

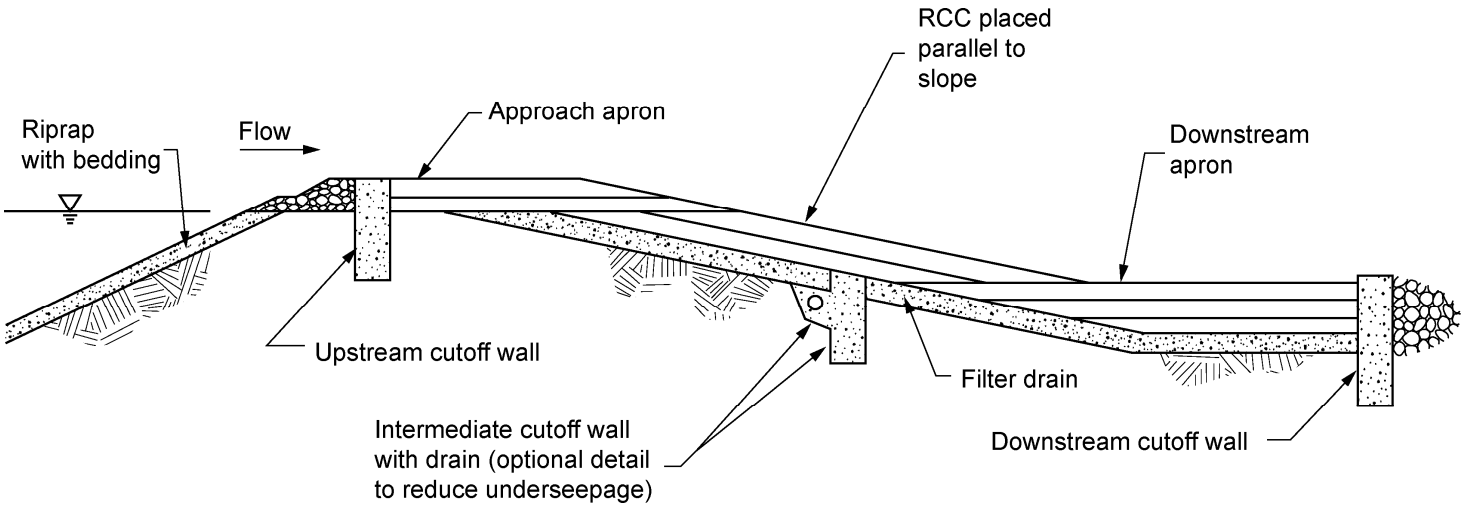

Figure 2-2.—Overtopping protection with RCC placed parallel to slope (PCA, 2002, all rights reserved).

The following discussion of the design of sloped spillway chutes is intended for RCC placed in horizontal lifts, although much of this information could also apply to RCC placed parallel to the slope.

The thickness of the sloped RCC chute is commonly measured perpendicular to the slope. The required thickness is based upon the slope of the spillway, constructability requirements for placement of the RCC, and structural requirements to resist potential uplift pressures and other loading conditions. The thickness of a stepped chute will also be dependent upon the lift width. A minimum 8-foot-width is normally required for the horizontal lift surface to operate standard placing and compacting equipment. This provides an effective concrete thickness of 2.3 to 3.2 feet for embankment slopes of 2:1 to 3:1, respectively. A 5-foot-width of RCC, with a 3-foot-width of pervious fill, was placed in horizontal lifts on a 2:1 slope for South Dam in Ohio, using a split spreader box (Hill, 1997). Lifts wider than 8 feet may be needed to provide additional weight if required to resist potential uplift pressures on the RCC slab during overtopping. The location of the maximum uplift pressure beneath the slab is often found near the bottom of the slope just above the base of the spillway or adjacent to the downstream apron or basin slab. Most designers have adopted a minimum slab thickness of 2 feet for a sloped chute. The slab thickness is generally increased as the overtopping depth increases. Additional design guidelines for uplift loadings on spillway slabs may be found in *Design of Small Dams* (Reclamation, 1987a) and *Hydraulic Design of Spillways* (U.S. Army Corps of Engineers [USACE], 1990).

Unformed RCC chutes are usually less expensive and take less time to construct than formed RCC chutes, and are therefore used more commonly. Unformed RCC is usually end dumped by trucks or placed by a loader and spread by a dozer. Compaction is performed by single- or double-drum vibratory rollers. During compaction, the unrestrained face can result in RCC that is not fully compacted near the outside of the edge, which can ravel and erode over time. Raveling would generally be limited to the depth to the more densely compacted RCC. In an unformed chute, this zone of lower density should be considered as “sacrificial concrete” and should not be considered as part of the wearing surface, nor be included in the concrete mass for stability analysis. An unformed RCC face can have the appearance of rough, irregular-shaped concrete, with exposed aggregate and possibly rock pockets. To some, an uncompacted RCC surface can have the appearance of poorly constructed or damaged concrete, while to others, the rough, irregular appearance blends into the natural surroundings. If a smoother finish surface is an important project requirement, the exposed RCC edge can be compacted or trimmed to give a more uniform appearance.

Compaction of the exposed RCC face will increase the RCC density and reduce raveling; however, scattered rock pockets may still be encountered. Wetter RCC mixes are generally not well-suited for unformed steps. These mixes tend to spread out when compacted, making it difficult to maintain the proper thickness at

the outer edge. Because unformed steps are constructed on a flatter angle, the amount of energy dissipation on the sloped chute surface is reduced from that of formed steps.

When vertical forms are used to restrain the outside edge of the RCC lift during spreading and compaction, higher RCC densities can be achieved near the edge and a stepped surface is provided. Advantages of forming the outside edge of the RCC lift include:

(1) Increased energy dissipation on the sloped chute surface

(2) Higher RCC densities and strength at the outside edge of a lift, which reduces raveling and increases freeze-thaw resistance

(3) The improved appearance of a formed surface when well constructed

Placement of RCC against a vertical form requires a more workable RCC mix than for a non-formed surface. Enhanced workability is required for consolidation of RCC against the form to produce a smooth finished surface and to minimize rock pockets. The workability of the RCC near the form can be increased by:

(1) Providing an RCC mix with a higher cementitious content

(2) Using pozzolan or additives

(3) Increasing the water/cement ratio

The workability of the RCC adjacent to the forms has also been improved by enriching the RCC near the formed surfaces with a cement grout (Tatro et al., 2008). Disadvantages of forming include:

(1) Decreased RCC placement rates

(2) Increased requirements for laborers and carpenters to install, strip, and move forms

(3) Special compaction using smaller equipment

(4) Increased project costs

Joint surfaces naturally occur between succeeding horizontal lifts of RCC. The need to treat a joint depends upon the location of the joint and specific project requirements for bonding joints. Normally, it is desirable for the sloped chute to become a large monolithic mass to resist potential uplift pressures and to provide few paths for water to seep beneath the chute during overtopping flows. One approach to the design of horizontal RCC lifts is to require that a bedding mix be used between each lift to improve bonding. However, with proper curing and by maintaining a clean lift surface during construction, bonding of lift surfaces

usually occurs naturally. Although the degree of bonding between RCC lifts for overtopping structures is largely empirical, some research has been conducted on bonding of successive layers of RCC (Tayabji and Okamoto, 1987). Generally, delamination of RCC lifts in overtopping spillway applications has not occurred, with the possible exception of one project in the southwestern United States reported by PCA, where delamination apparently occurred between the top two lifts of an in-stream grade control structure on the Salt River in Phoenix, Arizona.

In many cases, monolithic action may not be structurally required, and RCC overtopping protection can be designed to resist potential uplift pressures based on its dead weight alone. Seepage through RCC lifts can be safely handled by a properly designed and filtered drainage system beneath the sloped RCC chute. The decision to require bonding on cold joint lift surfaces (commonly defined as more than 6 hours old) at present, depends upon project requirements and engineering judgment. The minimum joint treatment generally recommended would be:

(1) Cleaning lift surfaces less than 6 hours old using compressed air or vacuum equipment prior to placement of succeeding lifts

(2) Removing contaminants, damaged RCC, or RCC that has not properly cured by appropriate methods

(3) Removing laitance using high-pressure water jetting or sand blasting

(4) Placing a bedding mix on joint surfaces more than 24 hours old, and between each lift of the approach apron and downstream apron only, if required

(5) Evaluating the need to provide a bedding mix on joints between 12 and 24 hours old. Ambient air temperatures are also often considered in addition to age when determining the requirements for treatment of joint surfaces

Contraction joints[3] may be placed in wide RCC spillways to control the location of cracks caused by thermal contraction of the RCC. Contraction joints are intended to reduce random cracking, improve the appearance of the project, and reduce maintenance. Most completed RCC overtopping projects have been designed without using contraction joints and have been allowed to crack freely. Performance histories have not been compiled on the effectiveness of using contraction joints. Spacing between contraction joints should be determined based upon the exposure conditions of the project and performance of other similar projects. Where contraction joints have been constructed for RCC overtopping

[3] Contraction joints are oriented normal to the dam axis and parallel to the flow and are also referred to as "longitudinal joints." Transverse joints are oriented parallel to the dam axis and normal to the flow. Some sources may reverse these conventions.

projects, longitudinal (upstream to downstream) joints have been installed, with a typical spacing from 100 to 300 feet. Transverse (abutment to abutment) joints have typically not been installed in RCC projects, as they could provide a mechanism for differential movement that could allow sloped sections of RCC to "ride up" over a lower section, leading to erosion during spillway operation, and structural and maintenance problems. Open transverse joints with offsets into the flow would be particularly susceptible to the development of uplift pressures beneath the RCC slab and could result in loss of the overtopping protection. Transverse cracks are most likely to occur at the inside corners of steps, where the RCC is thinnest. Offsets developing at these locations will be hidden from the flow and the potential for the development of uplift pressures is minimized.

The objective of any joint in RCC should be to produce a fairly straight contraction joint that disbonds the RCC on either side of the joint while not reducing the strength and density of the RCC near the joint. Crack inducers have been constructed and installed using different materials and methods to produce vertical joints in RCC structures where required, including steel plates driven into the lift, and plastic sheeting or steel plates buried in the lift. The steel plates and plastic sheeting create a plane of weakness within the RCC that will encourage cracks to form. Sawcuts are generally not recommended as they tend to produce a wider joint which would increase the potential for seepage and the migration of fines. RCC contraction joint details should include a means to prevent direct connection from the flow surface to the underlying embankment. Although waterstops used in conventional concrete structures have typically not been used in RCC overtopping protection, geomembranes have been used beneath joints to minimize the infiltration of spillway flow through the joint, and geotextiles have been used to control the potential for migration of fine particles through a joint from the foundation.

As flow descends a stepped spillway chute, a roller develops within the flow on each step. Significant energy can be dissipated as the roller rotates into the main flow, depending upon the flow depth and step height. Investigations of the hydraulic performance of stepped spillways have been conducted by several researchers. Although many of these studies have been performed on steeper slopes for concrete dams (up to 0.7:1) (e.g., Houston, 1987; Houston and Richardson, 1988;and Christodoulou, 1993), more recent research has focused on flat-sloped spillways for embankment dams (2:1 and flatter). The results of studies performed in Australia of flow resistance for stepped chutes on embankments having flat to moderate slopes (between 11 and 30 degrees) are presented by Gonzalez and Chanson (2006), and include some design guidance for the heights of steps and training walls. The United States Department of Agriculture (USDA) – Agricultural Research Service (ARS) has performed research on stepped spillways for embankment dams (Hunt and Kadavy, 2008a, 2008b, 2009a, and 2009b). A two-dimensional physical model of a stepped spillway was constructed to evaluate the inception point, flow velocities, and energy dissipation within a 4:1 sloping spillway chute having steps of varying

heights. A 1:8 scale was used to minimize scale effects related to viscous forces and surface tension.

Model unit discharges ranged from 1.2 to 8.9 $ft^3/s/ft$. Water surfaces, bed surfaces, flow velocities, and air concentrations (or void fractions) in the flow were recorded. The inception point was defined as the location where the turbulent boundary layer (or flow region affected by the stepped surface) reaches the free water surface, and where significant flow bulking first occurs in the flow. Flow bulking is the increased flow depth above the normal expected (or clear water) flow depth in the stepped chute, resulting from the entrainment of air. Flow bulking within the chute directly impacts the required height of the chute training walls.

The inception point moves downstream with increasing unit discharge, and may be located by observation or by equation (Hunt and Kadavy, 2009a). Additionally, the inception point moves downstream for a given unit discharge as the step height is reduced. Velocity profiles were found to transition from nearly uniform at the crest and approached a one-sixth power law distribution at the inception point. Average velocities beyond the inception point were based on the equivalent clear water depths without air. The computed average flow velocities are used to determine the relative energy loss on the spillway chute. Energy dissipation at any location within the chute was defined as the ratio of head loss to total head, expressed in percent, and was found to vary linearly from near zero at the downstream edge of the crest to approximately 30 percent at the inception point (at distance L_i), increasing in a logarithmic fashion beyond the inception point to a maximum of approximately 73 percent (at distance $3.5*L_i$).

Christodoulou (1993) found that the two most important parameters governing energy dissipation are the ratio of the critical depth to the step height and the number of steps. Increasing the step height was shown to increase the energy dissipation within the chute. Knowing the energy dissipation in the spillway chute and the incoming flow velocity in the stilling basin is needed to size the stilling basin for a non-converging stepped spillway. The step height can also affect the cost, constructability, and accessibility of the RCC structure. Step heights for RCC spillways generally use 1- to 2-foot-high vertical forms. Higher step heights (3 feet or more) have been used on RCC gravity dams to provide increased energy dissipation for large spillway discharges, and/or to inhibit public access on the downstream slope. As the step height increases, the form strength and the bracing requirements will become greater. Greater step heights can also result in larger RCC volumes (PCA, 2002).

2.2.1 *Approach Apron and Crest*

RCC spillway crests for embankment overtopping protection often follow the shape of the embankment crest to simplify construction, but these crests represent a broad-crested weir having a low coefficient of discharge, especially for lower

depths of overtopping relative to the crest width. Increasing the efficiency of the spillway crest section can reduce the required crest length of the spillway and/or the overtopping depth, which typically reduces material quantities. A narrower spillway chute can also better match the downstream channel geometry. Total project costs are often reduced by using a more efficient spillway crest section with a higher discharge coefficient. Conventional concrete can be used to provide an ogee-shaped crest, a flat-curved crest, or a sharp-crested weir to improve the spillway discharge coefficient and reduce the upstream water surface, but will increase the cost of the concrete placement and may limit future access. The discharge coefficient of all weirs will vary with the approach channel conditions, approach depth (or crest height), depth of flow over the weir, and tailwater conditions. Design guidelines for spillway crest control structures are provided in general design references (Reclamation, 1987a and USACE, 1990).

The following should be considered when selecting the spillway crest design:

- ***Broad-crested weir.***—This design configuration consists of paving the embankment crest with RCC. The efficiency of this type of crest improves as the ratio of the depth of flow to the crest width increases. The discharge coefficient is affected by the approach conditions to the crest and the tailwater conditions below the crest.

- ***Sharp-crested weir.***—A sharp-crested weir can be constructed as an extension of an upstream cutoff wall and can significantly increase the efficiency of the spillway with minimal effect on the placement of the RCC.

- ***Ogee crest and other curved crest designs.***—The ogee crest shape is a highly efficient spillway crest section constructed of conventional concrete on an RCC apron and is discussed in *Design of Small Dams* (Reclamation, 1987a). Modified or non-standard curved crest designs (such as flat curves) are discussed in Engineering Monograph No. 9, *Discharge Coefficients for Irregular Overfall Spillways* (Reclamation, 1952).

The approach apron slab is located upstream of the spillway crest control section and sloped chute. The function of the approach apron is to:

- Reduce channel erosion

- Establish the crest height for the control section

- Increase the length of the under-seepage path

- Reduce the seepage that could occur from the reservoir beneath the spillway chute

The approach apron should be compatible with the internal geometry of the dam, and the apron should extend far enough upstream so that the length is sufficient to reduce the potential for piping or excessive seepage from occurring through the dam, beneath the apron slab, crest section, and sloped chute. An upstream cutoff wall is an important design feature to increase the seepage path beneath the approach apron and also to prevent erosion at the upstream edge of the RCC apron. Seepage beneath the approach slab and sloped chute can cause excessive uplift pressure, or saturation and instability of the embankment. Seepage analysis of the embankment may be required to determine the apron length upstream and the depth of the cutoff wall to control seepage and potential uplift pressures.

The thickness of the approach apron is controlled by the requirement to provide adequate weight to resist uplift. When determining the minimum thickness of RCC, the designer should consider freeze-thaw and long-term weathering protection, and frost heave. Two 12-inch lifts of RCC should be considered as a minimum thickness for constructability and serviceability of an RCC approach apron. In regions where the frost depth (or depth to which the groundwater is expected to freeze) exceeds two feet, the designer should consider increasing the minimum apron thickness or installing a gravel underdrain beneath the apron and downstream of the cutoff wall.

2.2.2 *Downstream Apron or Basin*

Common terminal structures for embankment overtopping projects include downstream aprons or stilling basins. The primary function of the downstream apron or basin is to protect the RCC spillway and dam embankment from failure during an extreme flood event. The length and thickness of the downstream apron depends upon energy dissipation and erosion-control features of the design. The downstream apron or basin is one of the most critical features of an RCC spillway design, especially when the RCC spillway is located over the dam embankment. The designer should have a thorough understanding of the spillway and channel hydraulics, foundation conditions, and erosion control requirements. The type of stilling basin or energy dissipator needed will depend upon the flow depth and incoming velocity, unit discharge, operating frequency, tailwater conditions, and downstream consequences. A simple apron with or without an end sill is generally most applicable to RCC overtopping projects with infrequent use. A conservative approach for designing the downstream apron or basin is to use competent bedrock as the structure foundation whenever possible. The downstream apron can also be located at an adequate depth below tailwater, and with adequate length, so that a hydraulic jump would form on the apron and not within the unprotected downstream channel.

The erosion potential of the soil or rock downstream of the apron must also be determined. The estimated depth of erosion and channel degradation can then be determined for the full range of spillway operational flows. Estimates of channel degradation, scour, and erosion below a spillway should be developed based on

channel hydraulics and foundation conditions. The hydraulic conditions that can occur at the toe of an embankment dam are usually less than ideal and physical modeling may be required. Erosive lateral flow and eddy currents can occur along the groins, and the downstream tailwater may be insufficient for the flow conditions, resulting in potential sweepout of the basin. Additional erosion protection may be required at the groins.

The downstream apron must be designed for uplift pressures that are more severe than for the upstream apron due to the high differential water pressures that may exist at the downstream end of the spillway chute (or upstream end of the apron). The designer needs to determine the tailwater depth at the downstream end of the apron slab, and the depth of flow at the upstream end of the apron slab, for the full range of spillway discharges, in order to evaluate the potential uplift loading conditions on the downstream apron. The critical uplift loading condition for design often occurs at flows less than the maximum spillway discharge. For further discussion, refer to spillway and stilling basin guidelines in *Design of Small Dams* (Reclamation 1987a) and *Hydraulic Design of Spillways* (USACE 1990). Based on typical construction conditions, a minimum thickness of three feet should be considered for the downstream apron for most projects.

Cutoff walls are typically located at the upstream and downstream ends of the RCC spillway, as shown in Figure 2-1. The primary function of the downstream cutoff wall is to prevent undermining of the spillway from channel erosion and degradation. The downstream cutoff wall should extend into competent bedrock, or to a depth below the estimated depth of erosion that could occur from the spillway design flow, and should not interfere with the drainage system. Scour and/or channel degradation studies may be required to determine the required depth of the cutoff wall, as well as post-scour stability analyses of the cutoff wall.

Cutoff walls are generally constructed of conventional concrete or RCC. Cutoff walls can be designed as non-structural elements, constructed by excavating a trench and backfilling the trench with conventional concrete, with or without reinforcement. Cutoff walls can also be constructed as formed reinforced concrete walls, which would require a larger excavation than trenched wall construction for installing the concrete form work. A formed wall design will require that the excavated slopes be laid back as required for trench safety, and then backfilled and compacted to grade. RCC cutoff walls require a larger trench excavation than for conventional concrete cutoff walls because of the minimum width requirements for placing and compacting RCC, and the need for side slopes of 1:1 or flatter for worker safety. RCC cutoff walls may be preferred for projects where conventional concrete would not otherwise be required. RCC can also be placed over the entire crest of the dam and extend down the upstream face of the dam. This design serves as a cutoff wall as well as minimizing the potential for contraction scour on the upstream face of the dam.

Sheet piling can also be used to construct upstream or downstream cutoff walls. Some advantages of driven steel sheet piling are that excavating trenches, dewatering, and placing compacted fill in the trench are not required. However, the use of driven sheet piling may only be suited to larger projects that can justify the higher equipment mobilization expenses. Driven sheet piling also requires foundation conditions conducive to pile driving, such as the absence of cobbles, boulders, and interbedded hard or cemented layers. Sheet pile cutoff walls can be constructed in rocky foundations by placing steel or plastic sheet piling in an excavated trench and then backfilling against the sheet piling, and these sheet pile cutoff walls should not interfere with the drainage system. Care must be taken during construction, as any gaps in the sheet pile cutoff wall can concentrate seepage flow.

End sills, chute blocks, and impact blocks can be added to the downstream apron to improve the hydraulic performance of the energy dissipator and shorten the apron length. If a hydraulic jump-type stilling basin energy dissipator is used, adequate tailwater will be required for these features to function as designed. If chute or impact blocks are used, capping the downstream apron with a conventional concrete slab should be considered to expedite construction of the blocks. The end sill can easily be incorporated with a conventional concrete or RCC cutoff wall. Riprap is often placed downstream of the RCC apron to protect the downstream edge of the RCC, and to transition to the downstream channel. Additional discussion of the design of terminal structures for RCC overtopping projects is provided by Paxson (2007).

2.2.3 *Drainage and filter requirements*

Drainage features are normally provided beneath the sloped chute, as shown on Figure 2-3. The most common method used to control seepage for an RCC spillway or overtopping protection is a drainage layer placed beneath the RCC. The drainage layer must provide sufficient capacity to convey the anticipated seepage, and it must meet filter criteria relative to the underlying soils so that piping does not occur. If a drainage system contains multiple layers (e.g., sand filters, gravel drains, and slotted or perforated pipes), then filter criteria must be met at each successive boundary. The seepage control system must include collection and outfall pipes or other means to discharge the seepage collected by the system.

Drain outlets can range from pipes daylighting through the RCC steps to substantial concrete channels. For narrow spillways, manholes and cleanouts can be located outside of the spillway walls. For wider spillways, drain outlets can be provided through the RCC chute. Exposed outlets should include screens to prevent animal access. Drain outlets and manholes must be designed to prevent overtopping flow from entering the drainage system and producing excessive uplift pressures beneath the slab. Hydraulic model studies have been used to develop drain outlet details which create negative pressure (or aspiration) at drain

outlets, to both prevent flow from entering the drain and induce drainage of the system. If underdrain pipes are included as part of the design, methods for cleaning, inspecting, and maintaining the system should be provided. Providing two access points (or cleanouts) to drain lines can facilitate closed circuit television (CCTV) inspection and maintenance activities. Cooper (2005) provides guidance on designing underdrain pipe systems to accommodate CCTV inspection equipment.

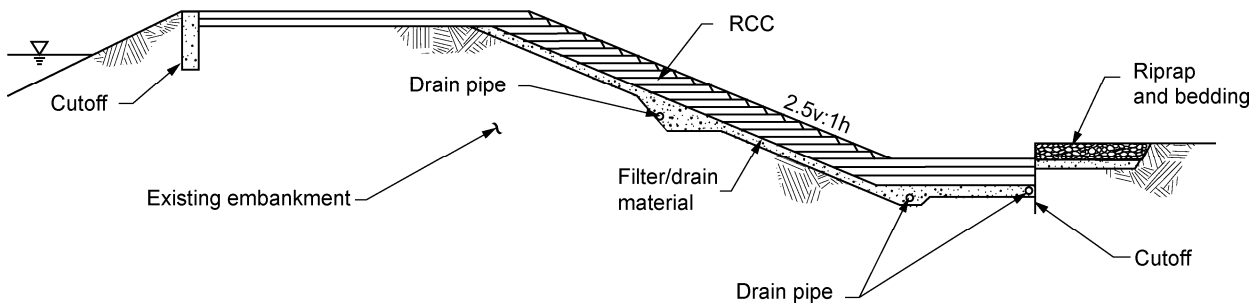

Figure 2-3.—Typical section: RCC overtopping protection
(PCA, 2002, all rights reserved).

During flood events, there is a potential for uplift pressures to develop beneath the RCC layer, either within a permeable drainage layer beneath the RCC or at the boundary between the RCC and less-permeable underlying foundation (if no drainage layer is present). If the uplift pressures exceed the combined weight of the overlying RCC and flowing water, the RCC could be displaced. Movement of the RCC layer during flow over the RCC can lead to foundation erosion, undermining, and failure of the RCC overtopping protection.

Uplift pressures can develop from two sources. The reservoir can either come into direct or near-direct communication with the area beneath the RCC from erosion at the upstream end of the RCC, or water pressure can be transmitted through cracks and/or joints in the RCC during overtopping flows, producing a stagnation pressure. Pressure from direct connection with the reservoir by way of seepage is of particular concern, because of the potential to transmit the full reservoir head to the area beneath the RCC. This is normally mitigated by constructing an upstream cutoff wall, and by providing drainage materials beneath the RCC.

For pressures to develop beneath large areas of the RCC slab due to overtopping flow, hydrostatic pressures must be transmitted through open cracks by infiltration, and then spread laterally beneath the slab. The potential for pressure development would increase as the spacing of the cracks decreases, since the distance over which the pressure must be transmitted decreases. Consequently, an RCC design that results in more widely spaced cracks is less prone to development of this condition.

The potential for pressure development beneath the RCC needs to be considered for steady-state seepage under normal pool conditions, for conditions during an

overtopping event, and for conditions immediately after overtopping ceases. If the seepage cannot drain from beneath the RCC quickly enough, a condition could develop whereby uplift pressure is trapped beneath the RCC without the gravity load from water on top of the RCC, and heave of the RCC could result. This could also occur under normal conditions due to a plugged or inadequately-sized internal drainage system or due to a rapid loss of tailwater resulting from sweepout in the stilling basin. Additional drainage capability can be provided by using formed holes through the RCC or by drilling holes from the downstream face after the RCC has been placed—provided appropriate filter material is already in place beneath the RCC. Drain holes should be located and configured so as to avoid the potential introduction of excess hydrostatic pressures into the foundation.

For low height dams, the weight of the RCC layer may be sufficient to resist the full reservoir head, even at the toe of the dam. However, for higher RCC structures, it may be necessary to include specific design features to address any potential uplift loads beyond those that can be resisted by weight alone. The primary design feature to reduce uplift pressure is a pervious underdrain layer with pipe outfalls to limit the development of unbalanced pressures. Control of seepage and uplift pressures needs to be considered not only for the sloping portion of the RCC spillway or overtopping protection, but also for any RCC apron that extends beyond the toe of the slope. Since reinforcing steel, waterstops, and anchors used in conventional concrete are generally not practical in RCC, the design should include:

(1) Sufficient drainage to limit/prevent uplift pressures

(2) Adequate RCC mix designs to develop sufficient compressive and bond strength to meet all loading conditions

(3) Widely-spaced contraction joints as needed to limit cracks and allow for larger monolithic sections

Unlike the case of steady-state seepage through an embankment dam, the method of analysis for uplift beneath an RCC slab is not well established. The combined weight of the RCC mass and the water on top of the RCC must be sufficient to resist the uplift pressure beneath the RCC. The weight of the RCC is relatively easy to calculate. The depth of water on top of the RCC would typically be calculated using water surface profile models, or computed from the unit discharge and flow velocity. The water pressure beneath the RCC is the result of transient flow and seepage conditions. Because of the uncertainty in the analyses, uplift pressures are not often analyzed in detail. Since few RCC spillways or overtopping protection structures have been tested by significant flows, not much field data are available. It is likely that more appropriate analysis methods will be developed as installed systems are tested by overtopping events. In the interim, PCA (2002) has recommended that RCC spillways and overtopping protection installations include underdrains or pressure relief systems spaced approximately

every 10 vertical feet. Typical details for an underdrain system are illustrated in Figure 2-4. Pipe drains that extend through sloping RCC sections should be designed to provide aspiration at the outlet end, so that they drain properly during flow over the RCC. Pressure relief systems should also be included beneath horizontal aprons located at the downstream ends of RCC spillways and overtopping protection sections, as is customarily done with spillway stilling basins.

Including a filter zone immediately beneath the RCC is generally advisable to control the potential for loss of fines through open cracks or joints. Flow through open cracks or joints could result from steady-state seepage, from the release of water that infiltrated beneath the RCC slab during overtopping, or from precipitation events. Geotextiles have been used to serve the filter function in some RCC spillway and overtopping protection applications. However, the history of using geotextiles for these types of applications is short, relative to the experience with sand and gravel filters. Since the potential for long-term deterioration or plugging of geotextiles has not yet been firmly established, it is not recommended that geotextiles be used in an application where their function is critical to dam safety (FEMA, 2008). Non-critical applications may be reasonable, subject to consideration of the limited access to the geotextile for repair or replacement in the future. This is true for any overtopping protection system.

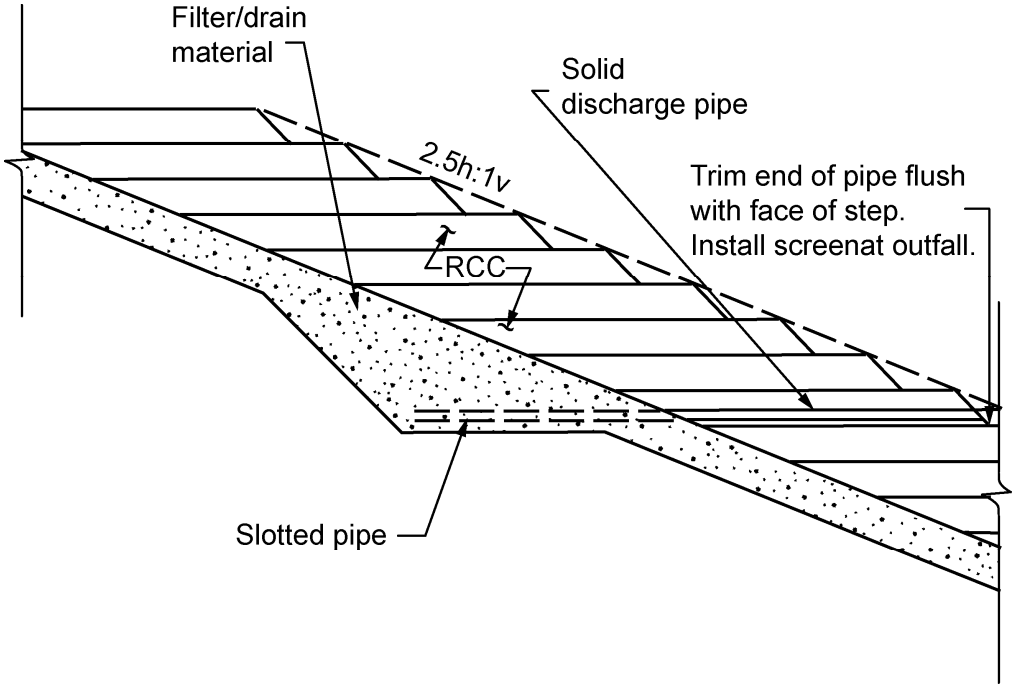

Figure 2-4.—Typical drainage details
(PCA, 2002, all rights reserved).

2.2.4 *Training Walls and Abutment Protection*

Dam abutments generally slope toward the river channel and funnel the overtopping flow into the river channel downstream. The abutments must be protected against erosion from overtopping flow—either by armoring them with RCC placed along the embankment groins or by providing cast-in-place concrete training walls.

Abutment protection is required for all embankment dam overtopping designs. The abutment protection should be designed to safely contain the spillway flow between the embankment groins, and transition to the stream channel. Although generally impractical, the abutment protection should be placed on a rock foundation when possible to prevent undermining the RCC slab if water overflows the abutment protection. Designs which direct flow in a converging configuration on the downstream face result in three-dimensional concentrated flow channels which increase the velocity and flow concentration from top to bottom at the abutment groins. The hydraulic analysis of flow depth and velocity for the overtopping spillway design should provide a design that protects the abutments from erosion and safely conveys the flow away from the dam. Abutment protection can be constructed by shaping the RCC to armor the abutments from erosion and to provide a "trough" to channel water from the downstream face of the dam to the natural channel below the dam. The design of abutment groin protection warrants conservative design assumptions and can often justify the use of a numerical or physical model.

Training walls are constructed along the sloped chute to contain the spillway flow and protect the dam embankment from potential erosion, while abutment protection is located along the downstream embankment groins. Overtopping of the training walls or abutment protection can result in high velocity concentrated flow along the critical abutment areas of the dam and erosion of the embankment. Training walls can be designed with a uniform channel width for the length of the chute, or they can be designed to contract (or converge) from the spillway crest to the downstream toe, as shown on Figure 2-5.

Two methods of constructing conventional concrete training walls for RCC overtopping protection are shown on Figure 2-6. Training walls constructed on the downstream face of the dam embankment can mitigate the need for abutment protection. The height of the training walls is determined by the water surface profile for the design discharge, including considerations for waves and air bulking (Reclamation, 1980). The water surface profile will depend upon the chute slope, surface roughness, unit discharge, chute convergence, step height, air entrainment, and energy dissipation (Hunt and Kadavy, 2008a).

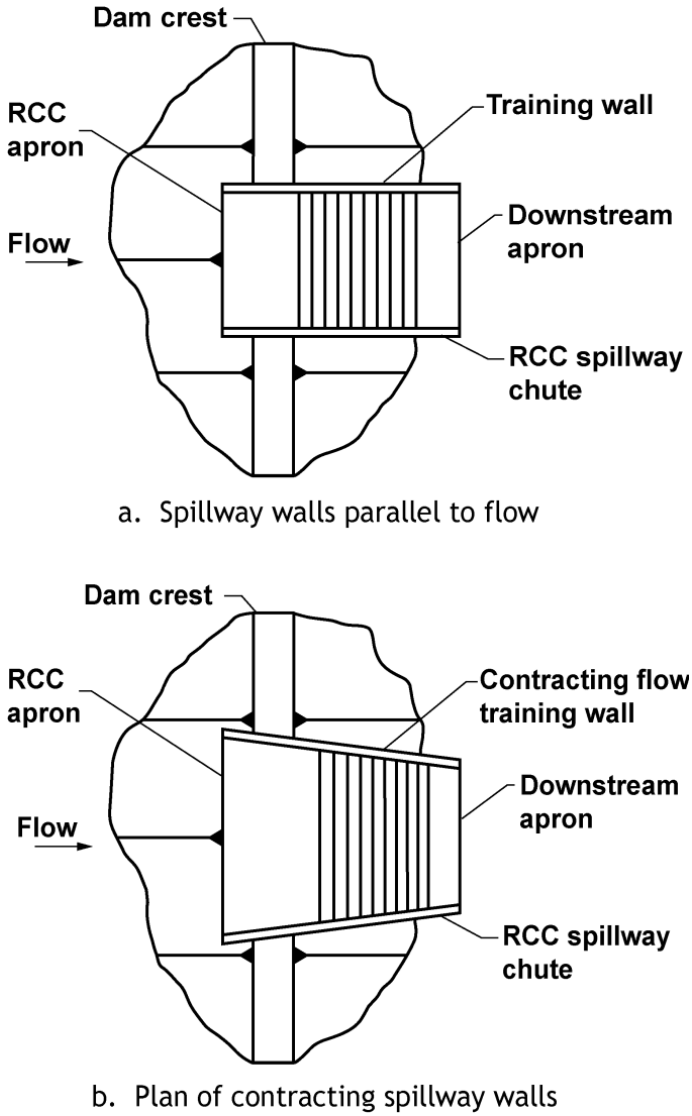

Figure 2-5.—Spillway flow training walls (PCA, 2002, all rights reserved).

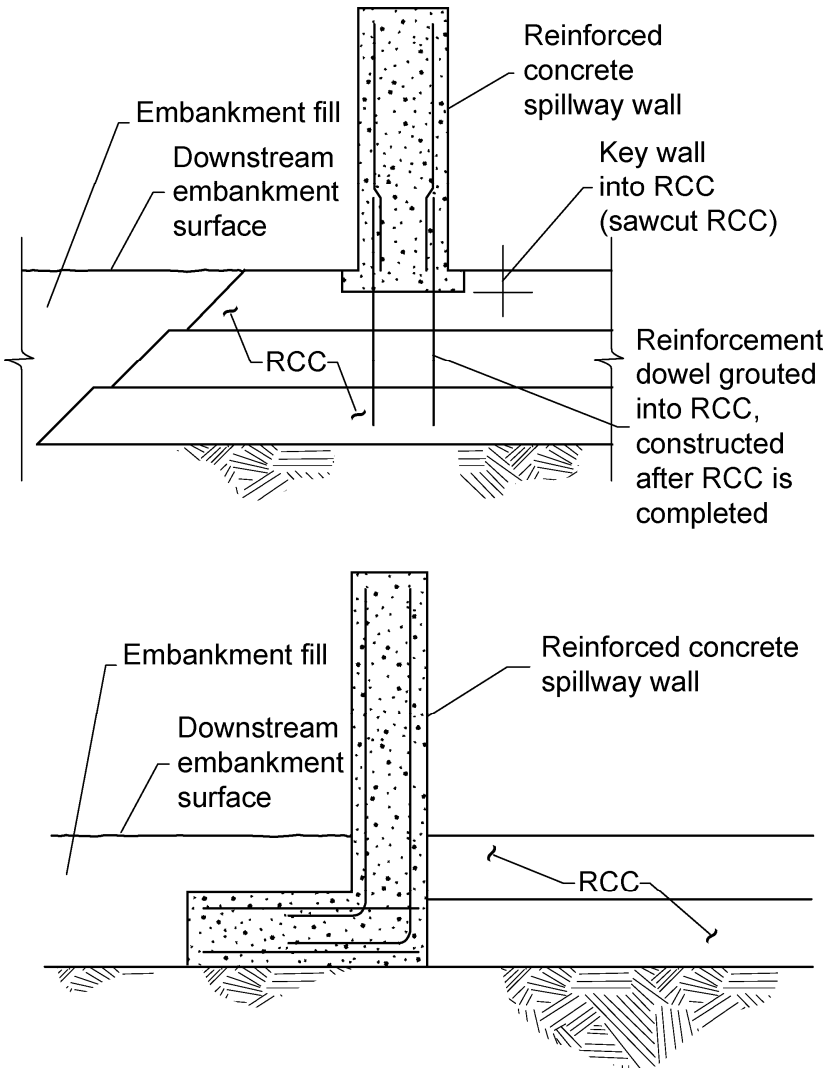

Figure 2-6.—Reinforced concrete training wall (section looking downstream) (PCA, 2002, all rights reserved).

References for determining wall height are given in *Design of Small Dams* (Reclamation 1987a) and *Hydraulic Design of Spillways* (USACE 1990). RCC spillway surfaces are typically rougher than conventional concrete chutes, and bulking of flow due to greater air entrainment in the flow must be considered in determining the maximum depth of flow. This is especially true for stepped spillway chutes.

Determining the height of converging (or contracting) spillway walls is more difficult due to the potential for the development of cross-waves; however, if the convergence angles of the walls are within guidelines (Reclamation 1987a), standard design aids can be used to estimate wall height. Sharply converging walls may require the use of numerical or physical model studies to evaluate complex three-dimensional flow conditions to predict spillway performance and

to determine the required wall height. Additional guidance on wall heights for converging chutes is available from Hunt and Kadavy (2008a and 2008b).

RCC training walls can be constructed by modifying the geometry of the RCC at each side of the spillway to contain the flow on the spillway surface, as shown on Figure 2-7. Structural concrete training walls can be constructed after the RCC placement is completed, and do not complicate the lift geometry nor interfere with RCC placement operations.

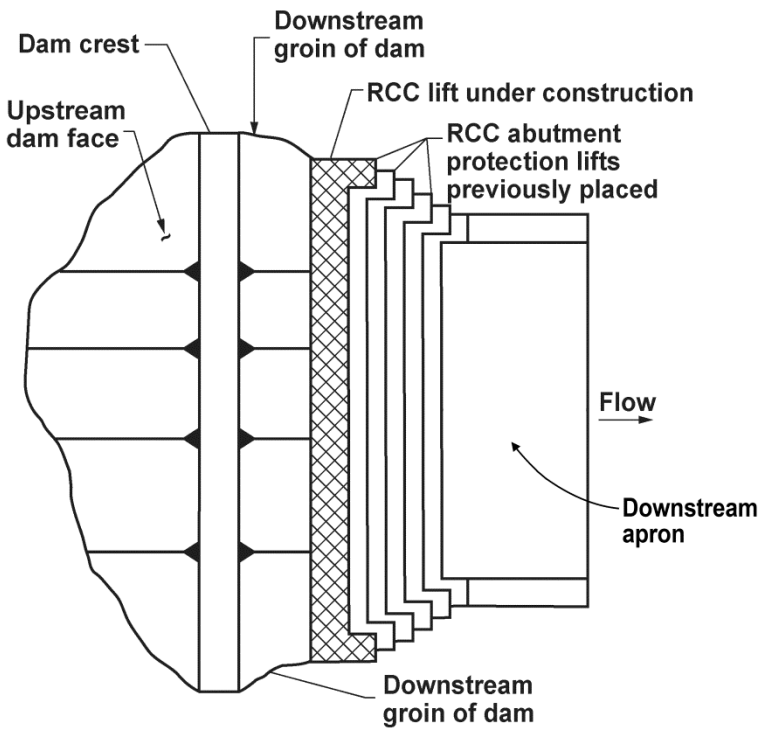

Figure 2-7.—Plan of RCC overtopping and abutment protection partially constructed (PCA, 2002, all rights reserved).

Generally, it is more economical to use structural concrete training walls if the spillway width is narrow, due to reduced impacts to the RCC placement. Analyses for the design of training walls with earth backfill should be based on either the active or at-rest coefficient of earth pressure (depending upon the degree of potential wall movement) and unbalanced water pressures. Water pressure has a large impact on design but can be reduced by installing drainage behind the walls. Wall analyses should include an evaluation of sliding, overturning, and global stability, as well as foundation bearing capacity. Walls extending through the dam crest should be battered on the embankment side to promote quality fill placement. Standard methods of analysis should be used. High training walls on relatively thin RCC slabs may produce cracking through the RCC due to differential settlement, if not accounted for in the design. Joints should be provided in training walls to control cracking, but generally do not require the provision of reinforcing steel or waterstops crossing them.

2.2.5 *Soil Cover*

RCC overtopping protection often changes a grass-covered embankment to a concrete-covered surface having a rough, unfinished appearance. A number of RCC spillways have been covered with soil and grass, such as Philipsburg Dam 3 in Pennsylvania and Lake Lenape Dam in New Jersey (Ditchey, 1992). A soil cover is usually only considered for RCC spillways that would operate infrequently, as it can create potential maintenance and environmental impacts at the dam and in the downstream channel when eroded. The minimum thickness of soil cover is usually dependent upon the type of soil and its ability to support vegetation, but has generally ranged from 6 inches to about 2 feet. Freeze-thaw protection of the RCC can also be a consideration in wet climates subject to freeze-thaw conditions, for which the soil cover may provide some protection.

Benefits that can be obtained by covering an RCC spillway with soil include:

- Covering the RCC with soil soon after placement, when practical, aids in curing the RCC by keeping the surface moist and by preventing surface drying caused by wind and thermal exposure.

- Soil cover helps maintain a uniform curing temperature for the RCC by limiting the daily thermal cycles of the RCC surface from solar radiation and nightly temperature drops.

- Covering the RCC with soil can bury the RCC below the frost level and limit potential freeze-thaw damage, which can increase the useful life and decrease long-term maintenance costs.

- Covering the RCC with soil and grass can provide a more natural appearance to the finished construction.

Disadvantages of covering the RCC surface with soil include:

- The RCC surface is buried and not accessible for visual inspection.

- Operation of the spillway would cause erosion of the soil cover, which would result in maintenance costs and a potential for environmental impacts downstream.

- Erosion in the soil cover may occur due to concentrated runoff from precipitation, developing erosion channels in the soil cover down to the RCC.

- Seepage outlet drains must extend through the soil cover and large quantities of seepage can cause erosion of the soil cover.

The decision to cover the RCC spillway should be based upon specific project requirements, including frequency of spillway use, aesthetics, and operation and maintenance requirements. The dam owner should be made aware of the advantages and disadvantages of soil cover so an informed decision can be made concerning using a soil cover for an RCC spillway.

2.2.6 *Instrumentation and Monitoring*

When placing an RCC layer on the downstream slope of an existing embankment dam, it may be important to maintain the operation of any existing instrumentation in the embankment to continue the dam's monitoring program. Existing instrumentation systems, such as piezometers, inclinometers, and borehole extensometers, are often exposed on the crest and downstream slope of the embankment. Suitable provisions must be made to protect, modify, or abandon and replace existing instrumentation systems,and to provide new systems as required for monitoring the modified dam embankment. In some cases, it may be easier to install a new instrument from the completed RCC surface rather than place RCC around an existing instrument.

Another key consideration is the settlement potential of the embankment, which can result in differential settlement and cracking of the RCC (described under Foundation Analyses in Chapter 1, Section 1.2.4). This may adversely affect the hydraulic performance of the RCC overlay as well as the long-term durability of the concrete. Measurement points are frequently installed on an embankment dam for settlement monitoring. If the settlement on an existing embankment dam has stabilized prior to placement of the RCC overtopping protection, this may reduce the concern for cracking due to additional settlement; however, some settlement could still occur due to the additional weight of the RCC or as a result of construction loads. Such settlement of the embankment could be concealed by the rigid RCC overlay and resulting voids may go undetected. Additional instrumentation and monitoring systems that may be required for RCC overtopping protection include blanket and/or toe drain seepage monitoring, and water level gauges or piezometers to monitor the internal phreatic surface.

2.3 *Construction Considerations*

2.3.1 *General Considerations for RCC construction*

RCC construction involves significantly higher placement rates than for conventional concrete placement, as well as transportation methods and compaction equipment typically used in earthwork. The compressive strength of RCC for overtopping protection is usually specified at 28 days, and generally ranges between 2,500 and 3,500 lb/in^2. Early strengths are often obtained by specifying a mix with less than 20 percent of the cementitious material being a fly ash or pozzolan. Most projects now limit the maximum aggregate size to

1½ inches or less, to improve workability, reduce segregation problems, avoid multiple stockpiles, and improve appearance. Few projects have been large enough to warrant producing an on-site aggregate, with one notable exception being Tongue River Dam in Montana, where over 100,000 yd^3 of RCC was placed (Wright, 1998). A complete discussion of RCC mix design, production, transportation, placement, compaction, and curing is beyond the scope of this manual, but can be found in many references, including those published by PCA (2002) and by Reclamation (2005b).

2.3.2 *Special Considerations for Construction on Embankments*

Seepage and wet foundation conditions can have a significant effect on foundation strength as well as on construction productivity. If water is encountered in a structure foundation (perhaps for the downstream apron or stilling basin) , it may be necessary to lower the groundwater table to a sufficient depth (possibly several feet) below the foundation grade such that a firm subgrade is obtained to withstand the operation of heavy construction equipment without damage. On many projects, sumps and ditches provide suitable groundwater control since relatively pervious foundation materials are typically encountered at stilling basin locations. The depth of trenches and spacing of sumps will vary based on the foundation material. In some foundations, well-point dewatering systems may be required for both foundation and slope stability.

As noted in Chapter 1, constructing overtopping protection on an embankment dam could impact the stability of the embankment. Any reductions to the embankment cross-section can decrease the factor of safety for slope stability, especially due to excavation required during construction. Excavation at the toe of the embankment to construct the various features of the overtopping protection, in particular for construction of a downstream stilling basin or for over-steepening of the downstream slope, will change the stability of the overall embankment. These factors must be considered during design, and may require reservoir operating restrictions to ensure adequate stability during construction. Special care should be taken during construction to preserve temporary cutslopes within the embankment until construction is complete.

Prior to placing the RCC and underdrain system, soft and weathered materials are typically removed to prevent subgrade deterioration during construction. Often, the first lift of RCC placed on filter/drain material cannot be compacted to the target compaction density due to yielding of the subgrade. The first lift may be designated as a non-critical or “sacrificial” lift of RCC, or a stabilized subgrade layer may be provided, consisting of a rock or gravel layer that is filter-compatible with the drainage layer, or a conventional concrete “mud” slab. If the first lift is too small for standard construction equipment, then small-scale compaction equipment, small backhoes, and hand-operated equipment may be used. However, this type of construction can be slow. An alternative for working

in a tight area is to place a conventional concrete starter slab or block to an elevation at which standard production equipment can more readily operate.

The interface between the embankment and the RCC spillway or overtopping protection needs to be protected from surface erosion, including sheet runoff, and from erosion during the flood event, including downcutting and headcutting. This is often done by either constructing RCC wing walls or dikes or by placing riprap or similar slope protection. The construction of transitions between the RCC and the embankment is best handled by using one of two construction techniques: sculpting the RCC at the embankment interface, or constructing a discrete interface zone with a concrete training wall. When RCC is "sculpted" at the embankment interface, the equipment and methods used to place and compact the RCC, including dozers and vibratory rollers, must be considered. Various types of production equipment have difficulty operating in tight areas because of their turning radii, and damage to the already compacted RCC can occur. RCC production in the transition zone is typically the slowest on the project, since RCC is difficult to place in curving and tapering lifts.

The transition between the RCC and the embankment and earth abutments can also be constructed using conventional concrete walls. These tend to be the easiest and quickest to construct, but their cost effectiveness must be evaluated. RCC can be easily placed and compacted against concrete walls or conventional concrete walls can be constructed on the completed RCC surface. When RCC is placed against rock abutments or foundation contacts, the main consideration (besides the potential for differential settlement) is whether a watertight bond needs to be developed between the RCC and rock. If not, RCC may be placed against the cleaned rock surface. If the interface is to be watertight, such as at or near the crest or abutment interface, then a layer of bedding mortar or conventional concrete may be required on the rock surface before placing and compacting the RCC. If bonding is required at the interface between RCC and existing walls and conduits, then the existing structure should be sandblasted and power-washed, and bedding mortar or conventional concrete should be placed between the RCC and the structure. Alternatively, a "grout-enriched" RCC mix (or GERCC) may be placed and consolidated using internal vibration (Tatro et al., 2008).

2.4 *Vulnerabilities and Risk*

2.4.1 *Performance of RCC Overtopping Protection Projects*

Of all the embankment dams in the United States for which RCC overtopping protection has been provided, few have experienced significant flows and for long durations. However, based on limited experience, embankments with RCC overtopping protection have performed well during overtopping, with only minor erosion of uncompacted and poorly-compacted material. For example:

- The RCC protection for Ocoee No. 2 Dam near Benton, Tennessee, has been subjected to periodic overtopping since completion in 1980 to accommodate whitewater rafters downstream, and has remained undamaged by water flows and weathering where the RCC was well-compacted.

- North Fork Toutle Dam, located in southern Washington, was designed as a debris retention dam with RCC service spillway and operated continuously for 11 months in 1981 under overtopping flow conditions, including volcanic ash and debris from Mt. St. Helens. The RCC was reinforced with steel mesh, and performed well despite some abrasion damage.

- The RCC protection for Brownwood Country Club Dam near Brownwood, Texas, completed in 1984, has overtopped several times with maximum flow depths up to 1 foot (Hansen, 1989).

Abdo and Adaska (2007) cite several other RCC overtopping protection projects that have performed well with overtopping depths of up to 10 feet, with damage limited to surface erosion and minor spalling. These limited examples do not, however, include performance under high unit discharges and high heads, and therefore would not have had the potential to develop significant uplift pressures relative to the weight of the structure, or erosion sufficient to damage the surface.

More recent performance of RCC overtopping protection occurred in Gwinnett County, Georgia in September 2009 (Hudock and Semerjian, 2010). The Upper Yellow River Watershed Dam Nos. 14, 15, 16, and 17 were the first projects constructed by the NRCS and Gwinnett County as part of a capital improvement project to upgrade fourteen NRCS flood control structures within the watershed to bring them into compliance with modern dam safety criteria for a high hazard classification. New subdivisions were built very close to the embankment dams, which ranged in height from 30 to 40 feet, and this would not permit conventional dam modifications to meet the new hydrologic design criteria Therefore, RCC spillways were constructed for overtopping protection of the existing dams. The first four Yellow River RCC spillways were completed between 2003 and 2008, and consisted of a straight or angled ogee weir with a converging stepped spillway chute and basin.

On September 21, 2009, a storm event occurred in the Upper Yellow River Watershed that resulted in more than 10 inches of rain in a 24-hour period, with an estimated return period of greater than 500 years. Each RCC spillway performed as designed, with overtopping flow depths averaging approximately 2 feet and for durations of nearly 30 hours. Peak unit discharges ranged from 4 to 13 $ft^3/s/ft$ of spillway width. The structures were closely monitored during and following the flood event and were found to have sustained no noticeable damage aside from aesthetic concerns and some riprap displacement in the downstream

channel. Soil covers at two of the dams were significantly eroded and were to be repaired.

2.4.2 *Potential Failure Modes*

Converting an embankment dam to an overtopping structure may introduce a new potential failure mode for a more frequent flood event than for the maximum capacity of the existing service spillway, due to the potential for embankment erosion when flow is allowed to pass over the embankment crest, even though RCC protection is provided. Such failure could occur due to large uplift pressures on the RCC slabs, either from reservoir seepage or from the overtopping flow through open joints or cracks, which result in loss of the overtopping protection, or due to surface erosion from flows beneath the overtopping protection along the embankment contact. Inadequate energy dissipation at the downstream apron, or overtopping of training walls, can also produce embankment erosion at the downstream toe or along the abutment groins sufficient to breach the dam.

Changes to the existing embankment seepage patterns and phreatic surface due to the construction of an RCC slab on the downstream face may also reduce the stability factors of safety of the embankment, increasing the static piping risk or potential for slope instability. These issues must be analyzed during the design process. RCC technology is still relatively new and no significant historical performance records exist for most RCC spillways on embankment dams.

There are numerous examples of RCC being used for overtopping protection of embankment dams, as indicated in Attachment 1. Although based on limited data, the performance of embankment dams protected by RCC which have been subjected to overtopping flows has been satisfactory to date. However, the few projects that have experienced overtopping flows have not seen the higher unit discharges and heads for which they were designed, and performance under such conditions is still unproven.

Case histories of three of the higher embankment dams modified using RCC (Spring Creek, Ringtown No. 5, and Tongue River Dams), as well as Addicks and Barker Dams, are provided in the Appendix.

Chapter 3. Conventional or Mass Concrete

Overtopping protection for embankment dams utilizing conventional or mass concrete relies on a continuous layer of concrete to serve as the flow surface for overtopping flows. This normally consists of a smooth, continuously-reinforced concrete slab (CRCS) constructed over a filtered drainage layer. The concrete slab and drainage layer protects the underlying embankment from high velocity flows discharging along the downstream face of the dam. Training walls are normally required at the sides of the overtopping protection to contain the overtopping flows and to protect the abutments. If the abutments consist of competent non-erodible rock, it may be possible to forego the training walls, as long as the groins are protected and the underlying embankment does not become subjected to high-velocity flow.

For this discussion, mass concrete is defined as conventional concrete having a thickness greater than three feet.

3.1 *Historical Perspective*

There are a number of embankment dams worldwide that have concrete spillways located on the downstream face, rather than on an abutment. Some of these spillways have been summarized by Sherard (1972) and are briefly described below. Although these installations may not have been originally classified as concrete overtopping protection, their concept is similar—high velocity flow is conveyed along a concrete surface located on the downstream face of an embankment dam. Many of the design concerns and potential vulnerabilities are also the same for spillways over an embankment dam as compared to concrete overtoppiing protection. Sherard concluded that some spillways have been built on top of embankment dams when they could have been built as conventional spillways on an abutment. In these cases, the alternative over the top of the dam was determined to be less costly and still considered technically sound. Embankment dams with spillways located on the downstream face include (in alphabetical order):

- ***Beaver Lake Dam.***—This dam is near Omaha, Nebraska, and is a homogeneous embankment. The spillway includes a 50-foot-wide open channel concrete chute on the downstream face of the dam. The floor slab of the chute is 10 inches thick and reinforcement is continuous across the joints. The discharge capacity of the spillway is 2,880 ft^3/s, for a unit discharge of 57.6 $ft^3/s/ft$).

- ***Bingham Creek Dam***.—This dam is near Bingham, Utah. The spillway includes a chute that is 20 feet wide at the upstream end and 10 feet wide

at the downstream end. The floor slab of the chute is 8 inches thick and reinforcement is not continuous across the joints. The discharge capacity of the spillway is unknown.

- ***Dry Creek Dam.***—This dam is in Utah. The spillway includes a 24-foot-wide open channel concrete chute on the downstream face of the dam. The floor slab of the chute is 10 inches thick and reinforcement is not continuous across the joints. The discharge capacity of the spillway is 2,800 ft^3/s, for a unit discharge of 117 $ft^3/s/ft$. The spillway was reported to have operated in 1972 with a maximum release of 400 ft^3/s.

- ***Green Canyon Dam***.—This dam is in New Mexico. The spillway includes a 120-foot-wide open channel concrete chute on the downstream face of the dam. The thickness of the spillway chute floor slab is 15 inches, with no reinforcement across the transverse joints. The total discharge capacity is 52,400 ft^3/s, which includes both the concrete spillway and an unlined, 600-foot-wide auxiliary spillway.

- ***Guaremal Dam***.—This dam is in Venezuela and consists primarily of compacted river gravels with a thin clay core. The spillway includes a 295-foot-wide open channel concrete chute on the downstream face of the dam. The floor slab of the chute is 12 inches thick and reinforcement is continuous across the joints. The discharge capacity of the spillway is 16,500 ft^3/s, for a unit discharge of 55.9 $ft^3/s/ft$.

- ***Kinzua Project Upper Reservoir***.—This dam is in Pennsylvania. The upper reservoir is operated for a pumped storage hydroelectric project. The spillway was designed to operate only if the upper reservoir was in danger of overfilling. The spillway contains an earthen fuseplug section, which must erode before the spillway operates. The spillway includes a 100-foot-wide open channel concrete chute on the downstream face of the dam. The floor slab of the chute is 6 inches thick and reinforcement is continuous across the joints. The discharge capacity of the spillway is 6,200 ft^3/s, for a unit discharge of 62 $ft^3/s/ft$.

- ***Loud Thunder Dam***.—This dam is near Rock Island, Illinois and consists of a homogeneous clay embankment. The spillway includes a 60-foot-wide open channel concrete chute on the downstream face of the dam. The floor slab of the chute is 9 inches thick and reinforcement is not continuous across the joints. The discharge capacity of the spillway is 6,500 ft^3/s, for a unit discharge of 108 $ft^3/s/ft$.

- ***Regadera Dam.***—This dam is near Bogata, Columbia. The spillway chute, located on the downstream face of the dam, transitions from 394 feet wide at the crest to 295 feet wide at the downstream end. The floor slab of the chute is 6 inches thick and reinforcement is continuous across the joints,

except at breaks in the slope. The discharge capacity of the spillway is 25,000 ft^3/s, for a unit discharge of 63.5 $ft^3/s/ft$.

- ***Silver Lake Flat Dam.***—This dam is near American Fork, Utah. The auxiliary spillway includes a 13-foot-wide open channel concrete chute on the downstream face of the dam. The floor slab of the chute varies in thickness from 9 to 14 inches and reinforcement is not continuous across the joints. The discharge capacity of the spillway is 670 ft^3/s, for a unit discharge of 51.5 $ft^3/s/ft$.

Reclamation has two concrete service spillways that are constructed on the downstream face of embankment dams. Meeks Cabin Dam, in Wyoming, is an embankment dam with a structural height of 184 feet and was constructed from 1966 to 1971. The spillway consists of an uncontrolled ogee crest structure on the upstream face of the dam, with a concrete box conduit/chute and a downstream stilling basin. The ogee crest is gently curved with a length of 39 feet. The box conduit is 30 feet wide and 15 feet high, and is buried shallowly within the downstream face of the embankment. The spillway discharge capacity is 7,240 ft^3/s with a head of 12.6 feet (for a unit discharge of 241 $ft^3/s/ft$); however, the maximum historic spillway discharge is estimated to be only 300 ft^3/s (Reclamation, 2010).

Currant Creek Dam, Utah, is an embankment dam with a structural height of 164 feet and was constructed from 1974 to 1977. The spillway consists of an uncontrolled ogee crest structure on the upstream face of the dam, with a concrete box conduit/chute and a downstream stilling basin. The ogee crest length is 20 feet. The box conduit is 20 feet wide and 10 feet high, and is buried shallowly within the downstream face of the embankment. The spillway discharge capacity is 850 ft^3/s with a head of 5.2 feet (for a unit discharge of 42.5 $ft^3/s/ft$); however, the spillway has never operated. The conduit portions of the spillways at both dams have control joints, with reinforcement continuous across the joints as well as waterstops (Reclamation, 2007a).

3.2 *Design and Analysis*

Some key analyses must first be performed for the design of concrete overtopping protection for embankment dams. Flood frequency studies are needed to develop flood hydrographs for various return period flood events for the site. This information is then used in a flood routing study, in which magnitudes and durations of spillway flows are determined. Once this information is obtained, water surface profiles can be determined to calculate flow depths and velocities along the downstream face of the dam for a suite of spillway discharges and for a range of return periods. This information can then be used for the design of the concrete overtopping protection for embankment dams:

- The flow depths are used to size training walls at the sides of the overtopping protection to retain the flows, or used with the flow velocities to evaluate the impact of overtopping flows on the rock abutments. If the abutments have limited erosion resistance and the energy of the overtopping flows is high enough, the erosion potential of the abutments should be evaluated.

- The flow depths and velocities are used to evaluate the potential for stagnation pressures occurring at transverse joints within the concrete overtopping protection, and for the design of drainage features.

- The flow depths and velocities are used to estimate the potential for cavitation damage to the surface of the concrete overtopping protection, for the determination of allowable concrete surface tolerances and potential aeration requirements.

3.2.1 *Sizing Wall Heights*

Overtopping flows along training walls would likely initiate erosion in the wall backfill, which has the potential to progress to the point of undermining the concrete slab and failing the concrete overtopping protection. Once this occurs, headcutting can initiate and progress upstream and possibly breach the dam, as was the case at El Guapo Dam in Venezuela in December 1999, when the spillway chute walls overtopped. Flood routings will provide information on the duration of certain discharge levels. If durations of spillway flows are limited, failure of the concrete overtopping protection may initiate due to wall overtopping, but may not have time to fully develop into a breach of the reservoir.

Water surface profiles can be calculated for discharges that are obtained from the frequency flood routings. Typically, the maximum discharges for a given frequency flood will be evaluated, but if the peak discharge will only occur for a very limited duration, lesser discharges can be evaluated as well. A number of water surface profile computer programs are available, such as Reclamation's ZPROF program. The water surface profile program should account for the boundary layer thickness, slope correction (by converting flow depths normal to the chute slope to flow depths in the vertical direction for use with the energy equation), and air entrainment.

For a given discharge and starting water depth at the dam crest, flow depths and velocities can be determined at key stations along the overtopping protection. This information can be used to evaluate training wall heights along the overtopping protection and estimate probabilities for the development of this potential failure mode. For hydraulic jump stilling basins provided at the downstream toe of the dam, the conjugate depth of the hydraulic jump (the flow depth at the downstream end of a hydraulic jump) can be calculated and compared to the stilling basin wall heights.

Spillway discharges generally pass through critical depth at the dam crest and enter the downstream slope at supercritical flow. The overtopping flow may be uniform or it may be accelerated or decelerated, depending on the slopes and the dimensions of the channel and on the total drop to the river channel. Flow at any point along the overtopping protection will depend on the specific energy, $d + h_v$, available at that point, where d is the flow depth and h_v is the velocity head. The velocities and depths of open channel flow in a channel conform to the principle of the conservation of energy, expressed by Bernoulli's theorem, which states that "the absolute energy of flow at any cross section is equal to the absolute energy at a downstream section plus intervening losses of energy." This relationship can be expressed by Equation 3-1:

$$\Delta Z + d_1 + h_{v1} = d_2 + h_{v2} + \Delta h_L \qquad \text{Eq. 3-1}$$

Where:

- ΔZ = the difference in floor elevation between points 1 and 2
- d_1 = the flow depth at point 1
- h_{v1} = the velocity head at point 1
- d_2 = the flow depth at point 2
- h_{v2} = the velocity head at point 2
- Δh_L = the energy losses in the chute between points 1 and 2, including friction, turbulence, impact, and transition losses

The ZPROF computer program computes the water surface profile using the Standard Step method for gradually varied flow. In this method, the distance between stations is known and the correct depth at each station is determined in the computations. The computation is carried forward in a series of steps, beginning with a known depth of flow (such as critical depth) at the first station. The depth of flow is used in the computations to obtain area, velocity, velocity head, and hydraulic radius. The Chezy equation is solved for the friction slope. The loss in head due to friction is then computed by multiplying the friction slope by the length of the reach. The ZPROF program uses the Chezy equation for friction slope rather than the Manning, Scobey, or Hazen-Williams equations, as it has a theoretical development and the others are empirically derived. The empirical equations were developed primarily for channels of small slope, subcritical flow, and fully turbulent flow. The Chezy coefficient (C) depends on the Reynolds number and the boundary roughness.

3.2.2 *Evaluating Erosion Potential*

The stream power – erodibility index method can be used to estimate the likelihood of rock erosion initiating on the abutments beyond the limits of the concrete overtopping protection. This method can be used to evaluate whether additional protection is needed if overtopping flows are allowed to contact unprotected rock abutments of the dam downstream of the crest. The erodibility index represents how erodible the abutment material is and is relatively simple to

calculate. The stream power represents the erosive power of the overtopping flows, and is much more complicated to compute. This method is described further in Chapter 15.

3.2.3 *Stagnation Pressures*

Stagnation pressure-related failures of concrete overtopping protection can occur as a result of water flowing into open joints and cracks during overtopping flows. If water entering a joint or a crack reaches the bedding materials or the embankment surface beneath the protection, failure can result from excessive uplift pressure and/or from erosive flow contacting the underlying materials. If no drainage exists, or if the drainage is inadequate, and the concrete slab is insufficiently restrained, then the resulting development of hydrodynamic pressure beneath a concrete slab can cause hydraulic jacking and displacement. If drainage paths are available—but are not adequately filtered—erosion of foundation material is possible and structural collapse may occur. Figure 3-1 depicts the development of stagnation pressures beneath a concrete slab for a spillway chute.

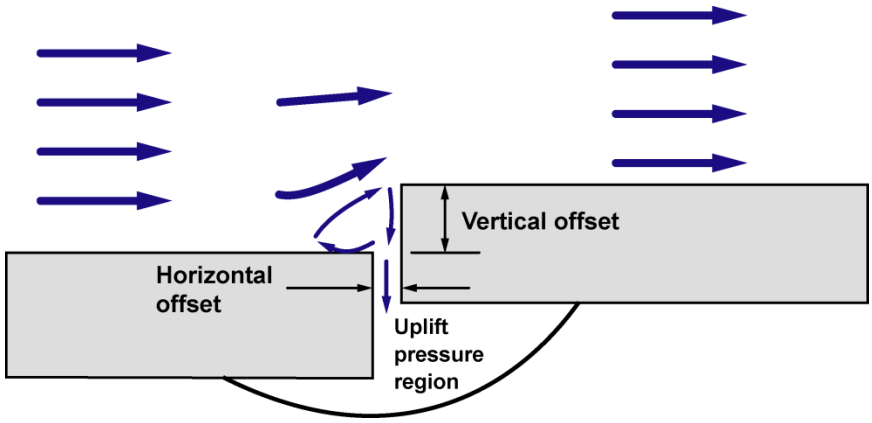

Figure 3-1.—Development of spillway stagnation pressures (Reclamation).

Routings of specific frequency floods provide discharges and discharge durations for a flood with a given return period. Water surface profiles can be calculated for discharges that are obtained from the frequency flood routings. The water surface profiles will provide depths of flow and velocities at selected stations along the concrete overtopping protection. The flow velocity at open joints and cracks in the slabs will help determine the magnitude of uplift pressure that can be generated beneath the slabs and the volume of discharge that can be introduced through the joint or crack. If durations of overtopping flows are limited, failure of the protection may initiate but may not have time to fully develop into a breach of the reservoir.

3.2.3.1 Estimating Stagnation Pressures

There are generally two conditions that must be present for a stagnation pressure failure mode to initiate. First, there needs to be an open joint or crack where flow and/or pressure can enter and access the foundation or interface. Second, the joint or crack needs to be offset into the flow so that stagnation pressures can develop. Offsets away from the flow tend to aspirate through the joint or crack—lowering the pressure and pulling drainage back into the spillway chute from the foundation. Longitudinal cracks parallel to the flow may allow seepage flows from the spillway chute into the foundation that could initiate foundation erosion, but at a lower magnitude than what would occur at a transverse joint or crack with an offset into the flow.

Structural damage at the joints can include delamination and spalling. Delamination typically occurs at a joint near the exposed surface, above the top layer of reinforcement (see Figure 3-2). The combination of high surface temperatures and a plane of weakness (i.e., layer of reinforcement) below the surface can result in delamination, caused by thermal expansion of the concrete at the joint near the surface and the development of differential stresses throughout the concrete depth. The resulting "splitting" tensile force parallel to the surface can exceed the tensile strength of the concrete and cause a crack and possible loss of concrete. Damage may be most significant in portions of the chute that have the greatest exposure to direct sunlight. If a competent waterstop is installed below the delamination, a serious stagnation pressure problem may not develop unless the concrete further deteriorates, compromising the waterstop. Loss of concrete upstream of the joint may create an abrupt offset into the flow and increase the potential for stagnation pressure.

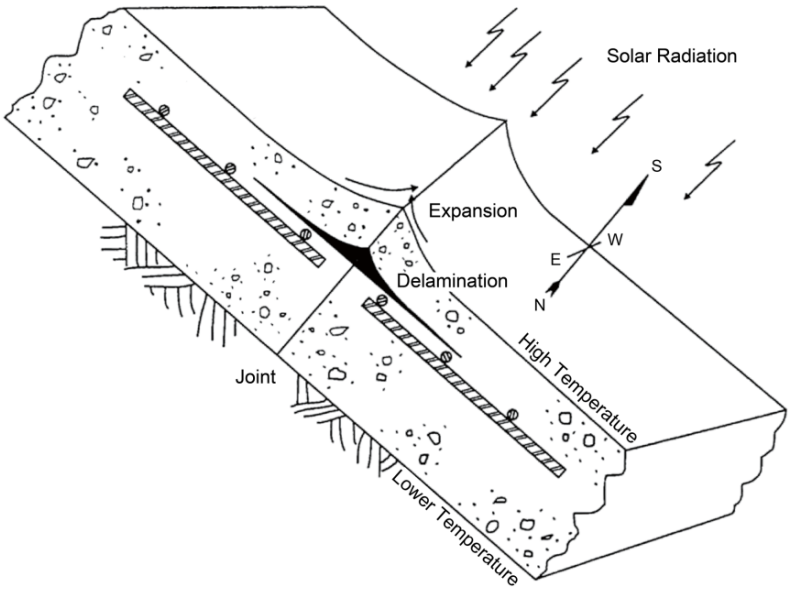

Figure 3-2.—Concrete delamination due to thermal expansion (Reclamation, 1997).

Concrete spalling at joints may be caused by freeze-thaw damage, alkali-silica reaction (ASR), sulfate attack, or poor concrete consolidation. When spalling occurs, a deep localized offset will be present. If deep enough, spalling may compromise other defensive measures (described below) such as reinforcement, waterstops, and keys. In addition, there may be offsets related to foundation heave or differential settlement. Offsets at open joints and cracks in slabs and the lower portions of training walls exposed to flow, and especially vertical offsets into the flow, allow for stagnation pressures to develop and for this potential failure mode to initiate.

Having established that there are, or may be, unfavorable conditions at open joints or cracks, the magnitude of uplift pressures that can develop to initiate potential uplift failure can be estimated. Model tests for offsets into the flow as small as ⅛-inch, with gaps as small as ⅛-inch, indicate that significant uplift pressures and/or flow can develop (Figures 3-3 through 3-7, from Reclamation, 2007b).

Some of these tests were conducted with a sealed water vessel beneath the "slab," where all hydrodynamic pressures were transmitted to this system (see Figure 3-3). Head loss that would occur as the water traveled through cracks, foundation materials, or drains was not modeled or captured. These results are, therefore, conservative and should be used with some caution. A second set of tests were conducted, in which the water vessel beneath the "slab" was opened or "vented" by allowing drainage out of the cavity (see Figures 3-4 and 3-5). These tests allowed flow through the system, and uplift pressures on the "slab" were measured as well as flow through the joint. Venting of the cavity produced a reduction in uplift pressure for all test configurations. However, it should be noted that the drainage flow rates were a function of the hydraulic losses within the test system. These include the crack entrance losses and losses within the piping and valve that allowed water to flow out of the area beneath the "slab." Therefore, if enough drainage were provided to accommodate all flow that tended to enter the crack, the uplift pressures could be lower.

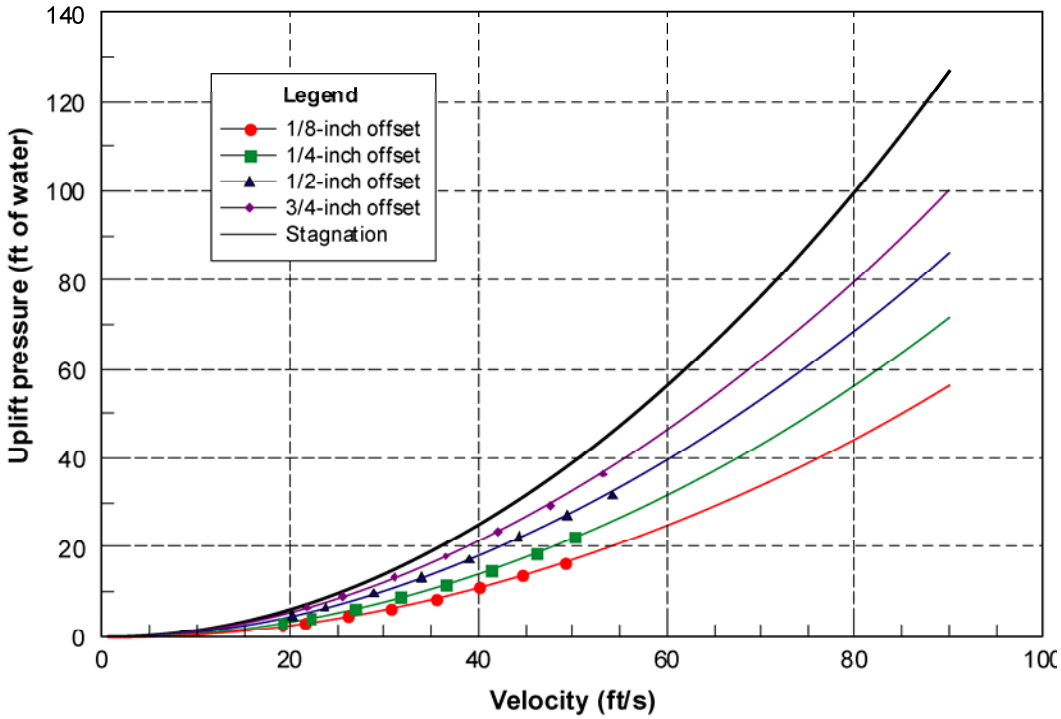

Figure 3-3.—Mean uplift pressure, sharp-edged geometry, sealed cavity, ⅛-inch gap (Reclamation, 2007b).

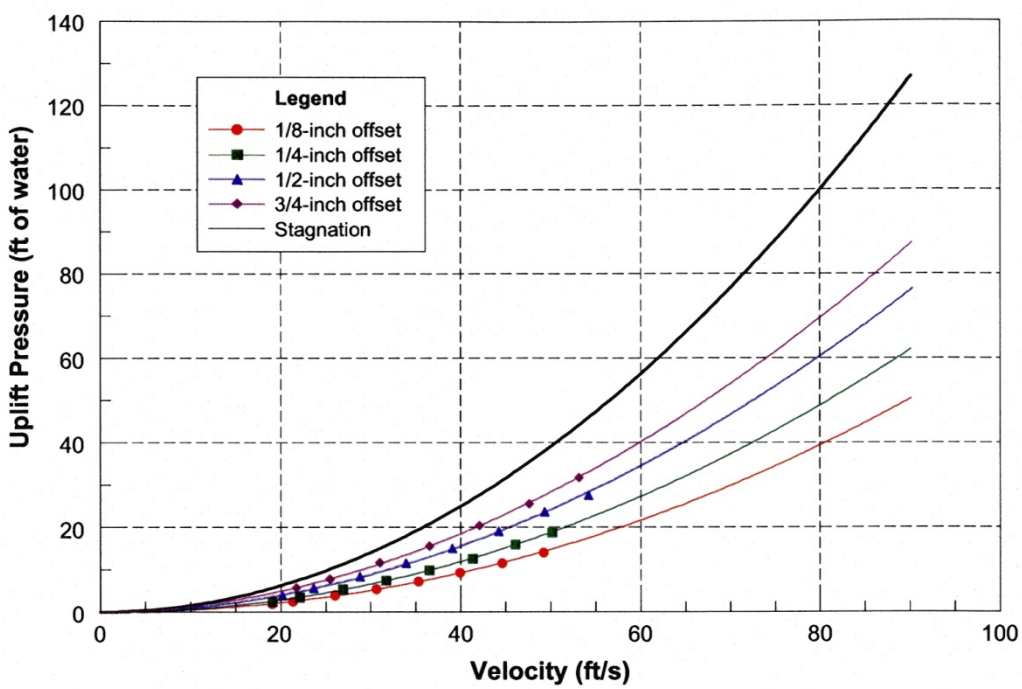

Figure 3-4.—Mean uplift pressure, sharp-edged geometry, vented cavity, ⅛-inch gap (Reclamation, 2007b).

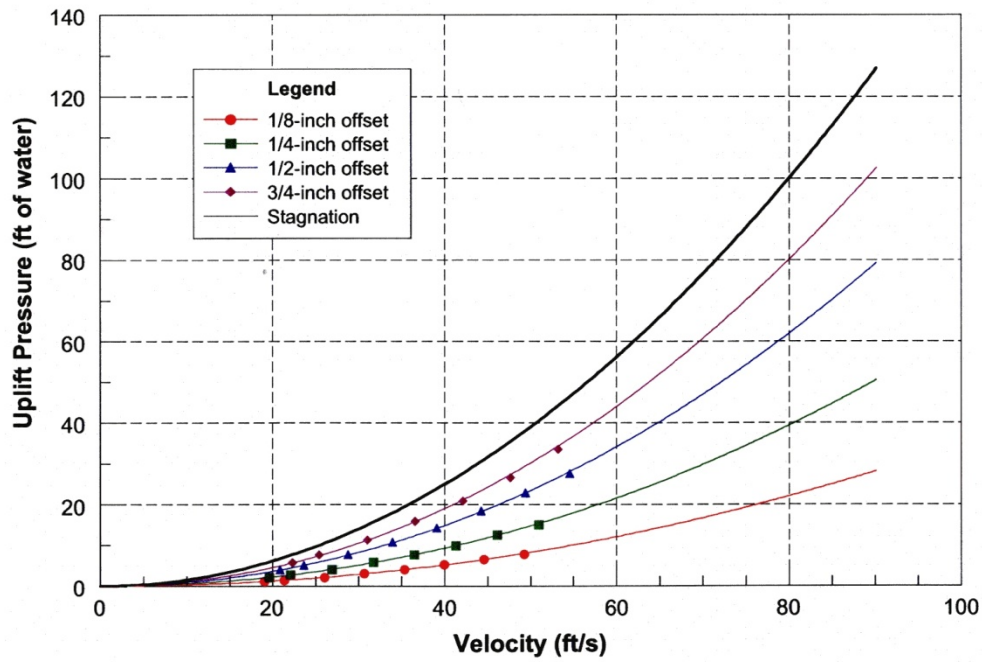

Figure 3-5.—Mean uplift pressure, sharp-edged geometry, vented cavity, ½-inch gap (Reclamation, 2007b).

Figures 3-6 and 3-7 provide unit discharges for variable flow velocities, joint offsets, and joint gaps. The discharges represented in Figures 3-6 and 3-7 are based on the pressure and drain conditions reflected in the companion curves provided in Figures 3-4 and 3-5. The unit discharges provide estimates of flow through the joint that are consistent with the uplift pressures shown in Figures 3-4 and 3-5, with the flow controlled by the valve used to model the vent in the experiments. The unit discharge values can be used to help assess whether the underdrain system capacity is adequate to reduce uplift pressures to those levels indicated in Figures 3-4 and 3-5.

An interesting result of the tests is that the test configurations with the smallest joint gap (see Figure 3-6) resulted in more flow through the joint as compared to test configurations with larger gaps (see Figure 3-7). A smaller gap can also produce higher uplift pressure than a larger gap for the smaller offsets (about $^{1}/_{4}$ inch and less). The postulated reason for this is that a recirculation zone is created at the point of the gap entrance that is more effective in blocking flow and transmission of stagnation pressure at larger gaps. The details of the joint were also varied in the studies. Sharp-edged joints were tested as well as joints with chamfered and rounded corners. The chamfered and rounded corners with small gaps performed in a similar manner to sharp-edged joints with wider gaps.

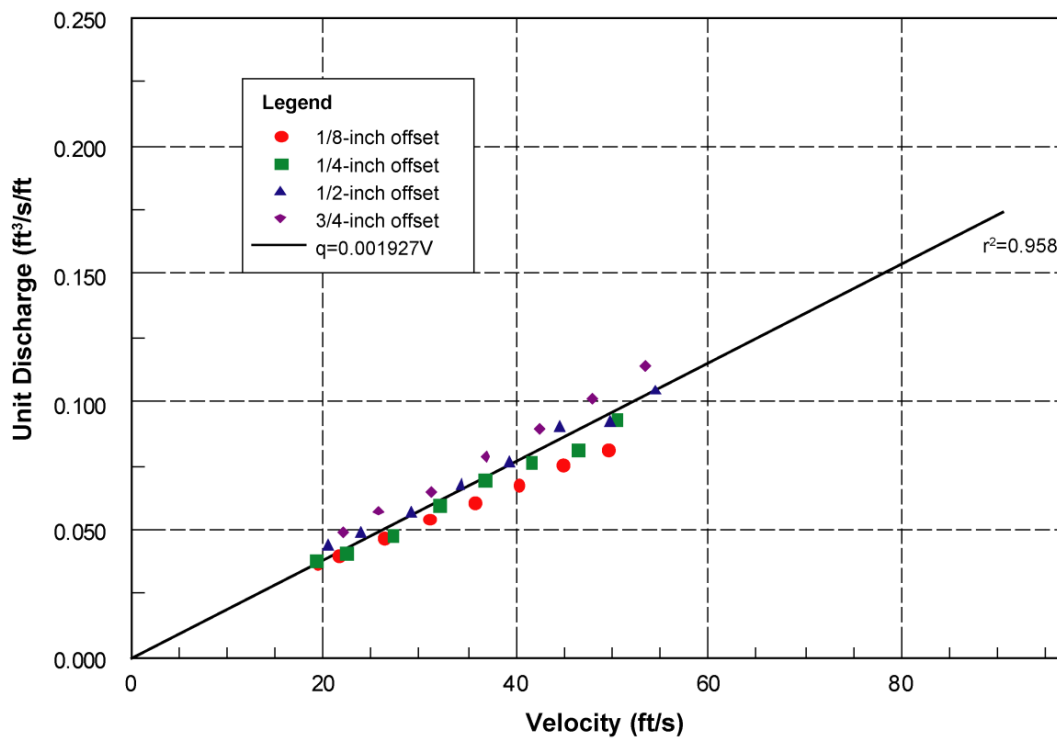

Figure 3-6.—Unit discharge for joint/crack, sharp-edged geometry, ⅛-inch gap (Reclamation, 2007b).

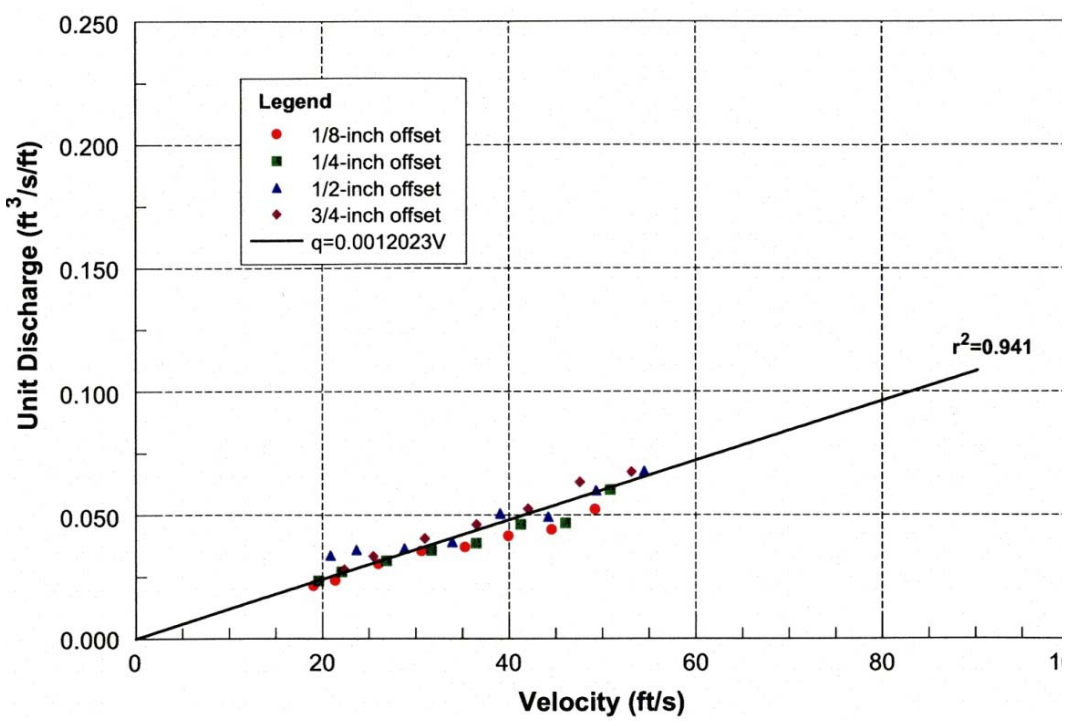

Figure 3-7.—Unit discharge for joint/crack, sharp-edged geometry, ½-inch gap (Reclamation, 2007b).

There have been no specific tests for a joint that is not offset into the flow, or for smaller gaps; however, it would seem possible that some flow and pressure could develop without an offset. Note that the stagnation lines (in black) in Figures 3-3 through 3-5 represent an upper bound or theoretical pressure that could be developed by converting the velocity head entirely to pressure. Additional conditions have been evaluated in the model tests, and are presented in Reclamation (2007b).

After flow rates are determined for various flood frequencies, water surface profiles can be developed to determine flow depth and velocity. Both may be important factors. In general, Reclamation studies have indicated that pressures and flows into offset joints and cracks increase with flow velocity (Figures 3-3 through 3-5). For a given flow, there may be portions of the overtopping protection that experience velocities that are high enough to cause damage, while other portions do not. If the portions of the overtopping protection experiencing the potentially damaging velocities are not prone to failure because they have adequate defensive measures (described below), then the lack unfavorable joints or cracks, and/or lack offsets into the flow, failure is not likely to initiate. However, as flows increase, other portions of the slab without adequate protection may experience conditions that can initiate failure. Therefore, there may be a specific flow for different sections of the slab that will represent an initiating failure condition. Depth of flow may be important when there is an increasing offset between two training wall segments that increases with height, or where damage has occurred above the slab invert.

3.2.3.2 Defensive Design Measures

Defensive design measures can help prevent this potential failure mode from initiating or from developing. These examples of defensive design measures are listed in order of decreasing effectiveness):

- Waterstops (which block paths for water flow through joints in slabs)
- Transverse cutoffs (which prevent vertical offsets at transverse joints and limits path for water from the flow surface to the foundation)
- Longitudinal reinforcement or smooth dowels across floor joints (which minimize width of cracks and openings at joints and may help prevent offsets)
- Anchor bars into foundation (which provide additional resistance to uplift pressures on concrete slabs; use soil anchors for earth foundation)
- Filtered underdrains (which relieve uplift pressures that can be generated beneath slabs and prevents movement of foundation materials into drainage system and initiation of foundation erosion)

- Rigid plastic foam insulation (which insulates the drainage system and reduces the potential for freezing. It also prevents frost heave locally).

An absence of these defensive design measures can allow initiation and progression of this potential failure mode. Figure 3-8 shows these defensive design measures. Keyed joints are an additional defensive measure sometimes used but not shown below.

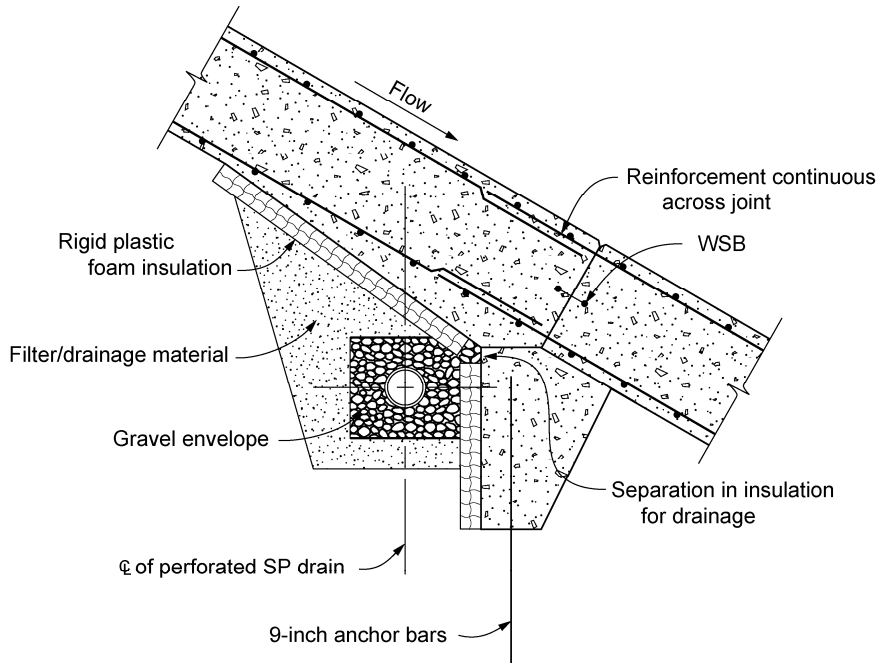

Figure 3-8.—Defensive design measures for concrete chutes to prevent uplift failure (Reclamation, courtesy of Bill Fiedler).

3.2.3.3 Case Histories

The following case histories illustrate the potential for stagnation pressures and seepage to cause damage to spillway chute slabs, which are analagous to concrete slabs for overtopping protection:

Big Sandy Dam Spillway: June 1983.—Big Sandy Dam is on Big Sandy Creek, 45 miles north of Rock Springs, Wyoming. The 85-foot-high rolled earthfill embankment dam was completed in 1952. The spillway is located on the right abutment of the dam and consists of an uncontrolled concrete side-channel crest structure and a concrete chute and stilling basin. The spillway has a discharge capacity of 7,350 ft^3/s at a reservoir water surface elevation 5.3 feet above the spillway crest elevation. The spillway is founded on thinly bedded to massive siltstone and sandstone. The foundation rock ranges from soft to moderately hard

with joints that are primarily vertical, tight and healed to open and spaced from 1-foot to several feet apart. A zone in the foundation below the spillway inlet structure contains open joints and bedding planes, which allowed reservoir water to seep under the spillway chute floor. The spillway chute was designed with an underdrain system and anchor bars, but waterstops and continuous reinforcement were not provided across the floor joints (Reclamation, 1987b).

Deterioration of the concrete slab occurred shortly after the dam was put into service. Cracking occurred in the chute slabs due to excessive water and ice pressures along the foundation-concrete slab interface and some of the slabs heaved and were displaced off the foundation, creating offsets into the flow. The spillway operated from 1957 to 1983 without incident, but a chute floor slab failed in June 1983, due to uplift pressures from flows of 400 ft^3/s (Hepler and Johnson, 1988). The failure did not progress beyond the spillway slab failure, primarily due to the erosion resistance of the underlying foundation relative to the energy of the spillway flows, and the magnitude and duration of the flood.

Calculations were performed to confirm that the failure was the result of stagnation pressures being generated under the chute slab. The Big Sandy Dam spillway chute slab failed between stations 4 + 66.87 and 4 + 85.85, during spillway discharge of 400 ft^3/s. Failure was initiated by an offset into the flow at station 4 + 66.87 (depth of flow—0.3 ft; velocity—31 ft/s). Assuming a ⅛-inch open joint and a vertical offset of ½ an inch and anchor bars that are only 50 percent effective, the calculations predicted the slab would fail. The calculations also showed that with anchor bars fully effective, the slab would not have failed. The uplift pressures assumed in the calculations were estimated from extrapolated laboratory tests (Hepler and Johnson, 1988). The analysis of the slab for uplift pressures evaluated a one foot wide strip of the chute slab between stations 4 + 66.87 and 4 + 85.85, assuming that the stagnation pressures would be constant over this area. From observations after the failure, it was observed that the anchor bars exposed beneath the slab had been pulled out of the soft sandstone foundation, with little evidence of the original grout encasement, indicating that the anchor bar capacity was not fully developed.

Hyrum Dam Spillway.—Hyrum Dam is on the Little Bear River, about 9 miles southwest of Logan, Utah. The 116-foot-high zoned earthfill embankment dam was completed in 1935. The spillway is located about 900 feet from the dam on the right abutment and consists of a concrete-lined inlet transition, a gated crest structure regulated by three 16-foot-wide by 12-foot-high radial gates, and a concrete-lined spillway chute and stilling basin. The foundation of the spillway consists of Lake Bonneville sediments (described as clay and gravelly loam) to a depth of about 90 feet below the spillway crest. The spillway chute was designed with an underdrain system, although a filter was not provided between the gravel drain envelope and the fine-grained foundation material. The spillway chute was constructed with a single layer of reinforcement that is not continuous across the joints. Waterstops were not provided at the joints. The spillway had significant

problems associated with cracking and slab movement. Long horizontal cracks developed in the sides of the trapezoidal spillway chute, and bulging of the lining was noticeable. In 1980, an inspection revealed water spurting through a crack in the left chute wall (indicating water pressure behind the wall) and open horizontal cracks. In 2003, ground penetrating radar, drilling, and closed circuit television examination of the spillway underdrains and drill holes were used to identify voids underneath the spillway chute. A continuous channel, over two feet deep in places, was identified beneath the steeper portion of the chute. The erosion that occurred in the spillway foundation was attributed to the introduction of flows through the cracks and joints in the slab and piping of foundation materials into the unfiltered drainage system (Reclamation, 2005a).

3.2.4 *Cavitation*

Cavitation is the formation of vapor cavities in a liquid. Cavitation occurs in high velocity flow, where the water pressure is reduced locally because of an irregularity in the flow surface. As the vapor cavities move into a zone of higher pressure, they collapse, sending out high pressure shock waves (see Figure 3.9). If the cavities collapse near a flow boundary, there will be damage to the material at the boundary. Cracks, offsets, and surface roughness can increase the potential for cavitation damage.

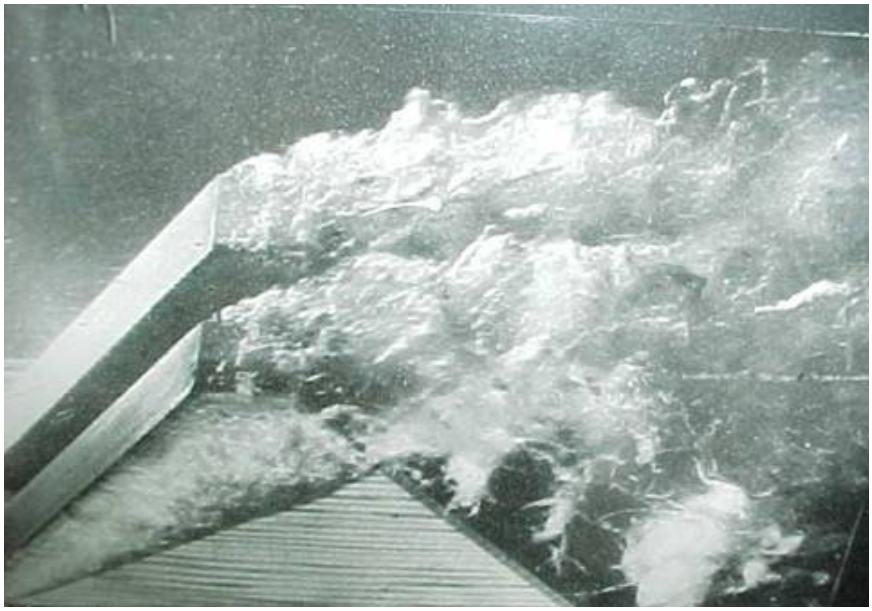

Figure 3-9.—Cavitation created in low ambient pressure chamber (Reclamation, 1990a).

Cavitation damage can occur along flow surfaces exposed to high velocity flow if surface irregularities exist and if the flow durations are long. For a new design, it should be expected that the flow surface will be in good condition, but the design should consider that defects along the surface will likely develop over time. If there is potential for cavitation damage to occur along the concrete overtopping

protection, evaluations of the concrete should be performed in the future, considering the actual condition of the surface. The extent of cavitation damage will be a function of the cavitation indices at key locations along the overtopping protection and the duration of flow. Cracks, offsets, surface irregularities and/or open joints in the overtopping protection, and the lower portions of training walls exposed to flow, may allow this potential failure mode to initiate. The geometry of the flow surface irregularities will affect the initiation of cavitation. The more abrupt the irregularity, the more prone the surfacewill be to the initiation of cavitation. Concrete deterioration in the form of alkali-silica reaction (ASR), freeze thaw damage, and sulfate attack can exacerbate this potential failure mode due to the resulting cracks, or opening of cracks and joints in the concrete, creating surface irregularities and/or offsets at damaged areas. However, this potential failure mode is unlikely to progress in most cases to the point where dam failure occurs, due to the long flow durations that are required to cause major damage to concrete slabs (Reclamation, 1990a).

3.2.4.1 Estimating Cavitation Potential

Cavitation indices can be used to evaluate the potential for cavitation damage to concrete overtopping protection. The cavitation index (Equation 3-2) is defined as follows:

$$\sigma = \frac{P - P_v}{\frac{\rho V^2}{2}} \qquad \text{Eq. 3-2}$$

Where:

P = pressure at flow surface (atmospheric pressure + pressure related to flow depth)

P_v = vapor pressure of water

ρ = density of water

V = average flow velocity

In most cases, there is the potential for cavitation damage when the cavitation index, σ, is 0.5 or less at a concrete surface. For large structural features that are introduced into the flow abruptly, cavitation damage can occur when the σ is as high as 1.0 or greater.

Routings of specific frequency floods provide discharges and durations for a flood with a given return period. This information can be used to generate probabilities for certain discharge levels. Water surface profiles can be calculated for discharges that are obtained from the routings of frequency floods. The water surface profiles can provide depths of flow, velocities, and cavitation indices at

selected stations along the overtopping protection. If the cavitation indices are not calculated by the water surface profile program (which is an option with Reclamation's water surface profile program ZPROF) cavitation indices can be calculated at any location along the concrete overtopping protection where the depth and velocity of flow are known (Reclamation, 1990a). The cavitation indices at offsets or irregularities along the flow surface will help determine the potential for cavitation damage to initiate. If durations of overtopping flows are limited, failure of the concrete overtopping protection may initiate but there may not be time for a breach of the reservoir to develop.

3.2.4.2 Cavitation Damage

The initiation of cavitation damage requires irregularities or roughnesses along the flow surface and a low cavitation index associated with an overtopping flow. Typical examples of irregularities in hydraulic structure flow surfaces include:

- Offsets into the flow at joints or cracks
- Offsets away from the flow at joints or cracks
- Holes, grooves, or spalls in the flow surface
- Delaminated surfaces
- Calcite deposits on the flow surface

For all of these occurrences, cavitation is formed by turbulence in the shear zone (interface between high velocity and low velocity flow) which is produced by the sudden change in flow direction at the irregularity. The location of the shear zone can be predicted by the shape of the roughness. Cavitation bubbles will collapse either within the flow or near the flow boundary, depending on the shape of the roughness. Surface irregularities can be identified by a thorough examination of the concrete overtopping protection. If a recent examination has not been performed or if the concrete overtopping protection is being designed, it may be reasonable to evaluate the potential risk of cavitation damage assuming both favorable and unfavorable conditions. The difference in risk between these two conditions may provide justification for further characterization of the flow surface.

Water surface profiles can be used to calculate cavitation indices at key locations along the flow surface. These key locations would include any areas where surface irregularities or offsets have been identified or where it is expected that these features might exist. Lower cavitation indices indicate a higher potential for cavitation damage. The cavitation index will decrease with an increase in flow velocity and a decrease in the pressure at the flow surface. For a given flow, there may be portions of the concrete overtopping protection that are vulnerable to the initiation of cavitation, while other portions may not be vulnerable. As flows

increase, additional portions of the overtopping protection may experience conditions that can initiate damage. Therefore, there may be a specific flow for different sections of the overtopping protection that will represent an initiating failure condition.

Cavitation occurs in several phases. Incipient cavitation occurs when occasional cavitation bubbles develop in the flow. Developed cavitation occurs when many small cavitation bubbles are formed, appearing as a fuzzy white cloud. Supercavitation occurs when large vapor cavities are formed from individual cavitation bubbles.

The rate of cavitation damage is not constant with time. At first, a period begins where loss of material does not occur. This period is known as the incubation period. In this phase surfaces become pitted. Following the incubation period, the damage rate increases rapidly during a period called the accumulation period. The damage rate reaches a peak during this period. The last phase is an attenuation phase in which the damage rate decreases. However, if the damage has resulted in loss of the concrete spillway lining, a large amount of erosion can occur.

The initiation of cavitation damage can be predicted by the cavitation index of the flow. In general, if the cavitation index is greater than 0.5, significant damage is not expected for a typical spillway chute or tunnel lining. For cavitation indices between 0.5 and 0.2, damage can occur if surface irregularities exist. If the irregularity is large and abruptly introduced into the flow, such as a stilling basin baffle block or a stilling basin splitter wall, damage may occur for flow with a cavitation index of 1.0 or greater. For flow surface irregularities that are abrupt but small (such as offsets at joints, or localized spalled areas with a steep profile), damage may initiate during flow with a cavitation index as high as 0.5. If the irregularity is more gradual, the cavitation index may have to approach 0.2 in order for damage to occur. If the cavitation index is below 0.2, air entrainment is the only reliable method of preventing cavitation damage, as described below.

Whether cavitation initiates or not will be a function of the cavitation index of the flow and the geometry of the surface irregularity that potentially could initiate cavitation. Figures 3-10 and 3-11 provide information on incipient cavitation for chamfers and for isolated surface irregularities. Incipient cavitation is the stage at which occasional cavitation bubbles form in the flow. Damage is not expected at this level of cavitation—the cavitation index must drop significantly for cavitation to progress and for damage to initiate. For hydraulic structures, damage has been experienced at flow cavitation indices that are one-sixth to one-fourth of the incipient cavitation values. Additional graphs are included in Chapter 2 of Reclamation's Engineering Monograph No. 42 (1990a) that provide incipient cavitation characteristics for a wide range of surface irregularities.

When flow is only minimally aerated, cavitation damage has been found to vary inversely with the air concentration. This conclusion was reached based on tests conducted with air concentrations between 8×10^{-6} and 20×10^{-6} moles of air per

moles of water (Stinebring, 1976). At high air concentrations of about 0.07 moles of air per moles of water, damage was found to be completely eliminated over a 2-hour test period (Peterka, 1953). The introduction of air into spillway flows reduces the potential for cavitation to damage concrete surfaces by reducing the damage that occurs from collapsing vapor cavities. If the flow is not naturally aerated, measures can be taken to introduce air into the flow at critical locations along the concrete overtopping protection by constructing air slots or ramps.

Overtopping flows can be self-aerating when the turbulent boundary layer from the floor intersects the water surface. If an air slot or ramp has been designed to introduce air into spillway flows, air entrainment is likely downstream of the slot or ramp. Model study results or actual field testing of the air slot/air ramp can be used to estimate the downstream effectiveness of the air entrainment. If air has not been intentionally introduced into the flow, it should be conservatively assumed that the flow is not aerated.

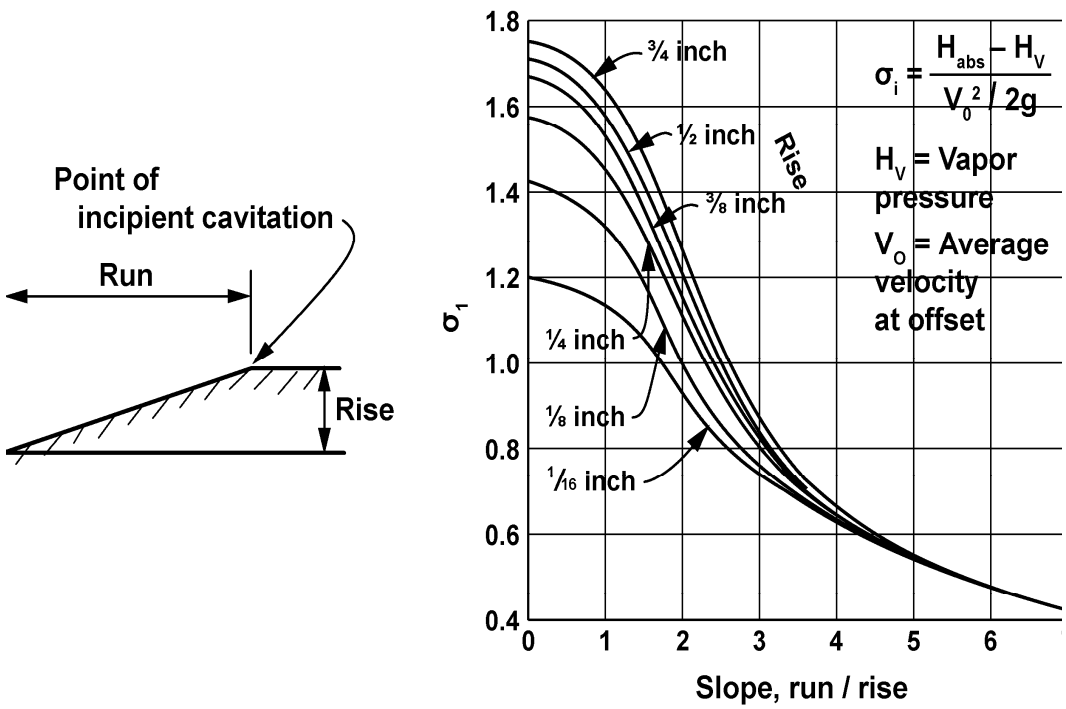

Figure 3-10.—Incipient cavitation characteristics of chamfered offsets (Reclamation, 1990a).

Symbol	Irregularity	Flow dimen-sions	Data source	a	b	c
△	Triangles	2	Hall, 1960	0.361	0.196	0.152
○	Circular arcs	2	Hall, 1960	0.344	0.267	0.041
▲	Hemispheres	3	Benson, 1966	0.439	0.298	0.0108
●	Cones	3	Benson, 1966	0.632	0.451	0.00328
□	Cylinders	3	Benson, 1966	0.737	0.550	0.00117
⊔	Slots (grooves)	2	Bohn, 1972	0.041	0.510	0.000314

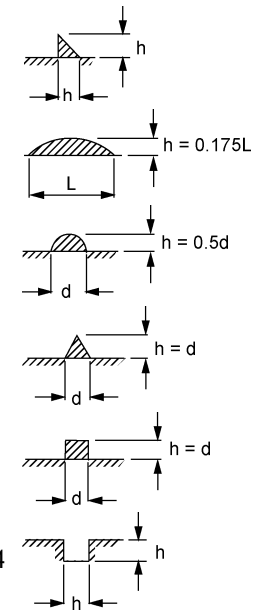

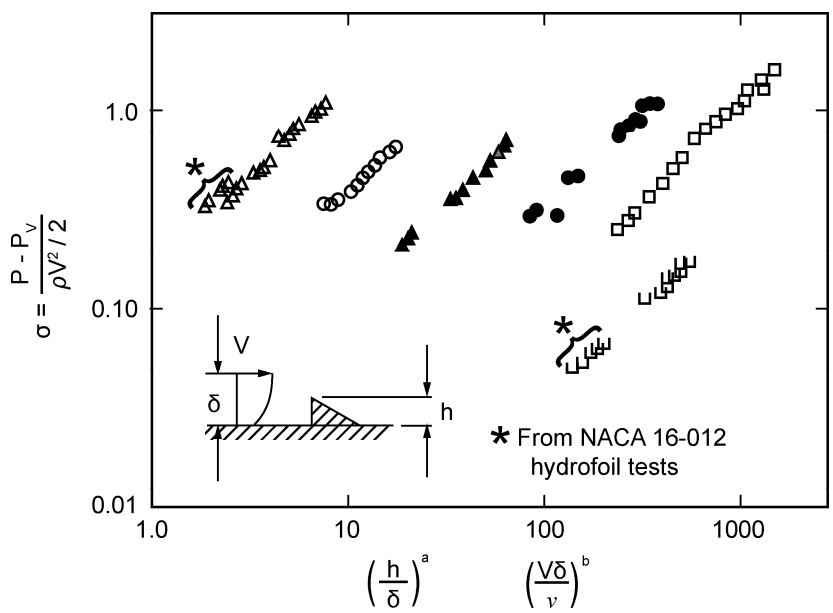

δ = boundary layer thickness = $0.38\ X_b/R_x^{0.2}$
X_b = distance from start of boundary layer
R_x = Reynolds number
V = velocity at top of boundary layer
v = kinematic viscosity of water

Figure 3-11.—Incipient cavitation characteristics of isolated surface irregularities (Reclamation, 1990a).

Several mechanisms are usually involved in the damage of hydraulic structures due to cavitation. When cavitation forms in a concrete lining due to a surface irregularity, surface damage will begin at the downstream end of the cloud of collapsing cavitation bubbles. After a period of time, an elongated hole will form in the concrete surface. The hole will get longer as high velocity flow impinges on the downstream end of the hole. This flow creates high pressures in microfractures in the concrete, formed around individual pieces of aggregate or within temperature cracks that developed during the concrete curing process. This creates pressure differentials between the impact zone and the surrounding area, which can cause aggregate or even chunks of concrete to be broken from the surface and swept away in the flow. As erosion from the high velocity flow continues, reinforcing bars become exposed. The bars may begin to vibrate, which can lead to mechanical damage of the concrete surface and fatigue failure of the reinforcing bars.

If flow velocities are sustained for a long enough period, the concrete lining can be completely removed over a portion of the overtopping protection, exposing the underlying embankment. Once the embankment is directly exposed to overtopping flows, erosion is likely to progress rapidly. Figure 3-12 depicts cavitation damage that has occurred in various spillways, as a function of the cavitation index and the duration of spillway discharges. (Note the use of metric units.)

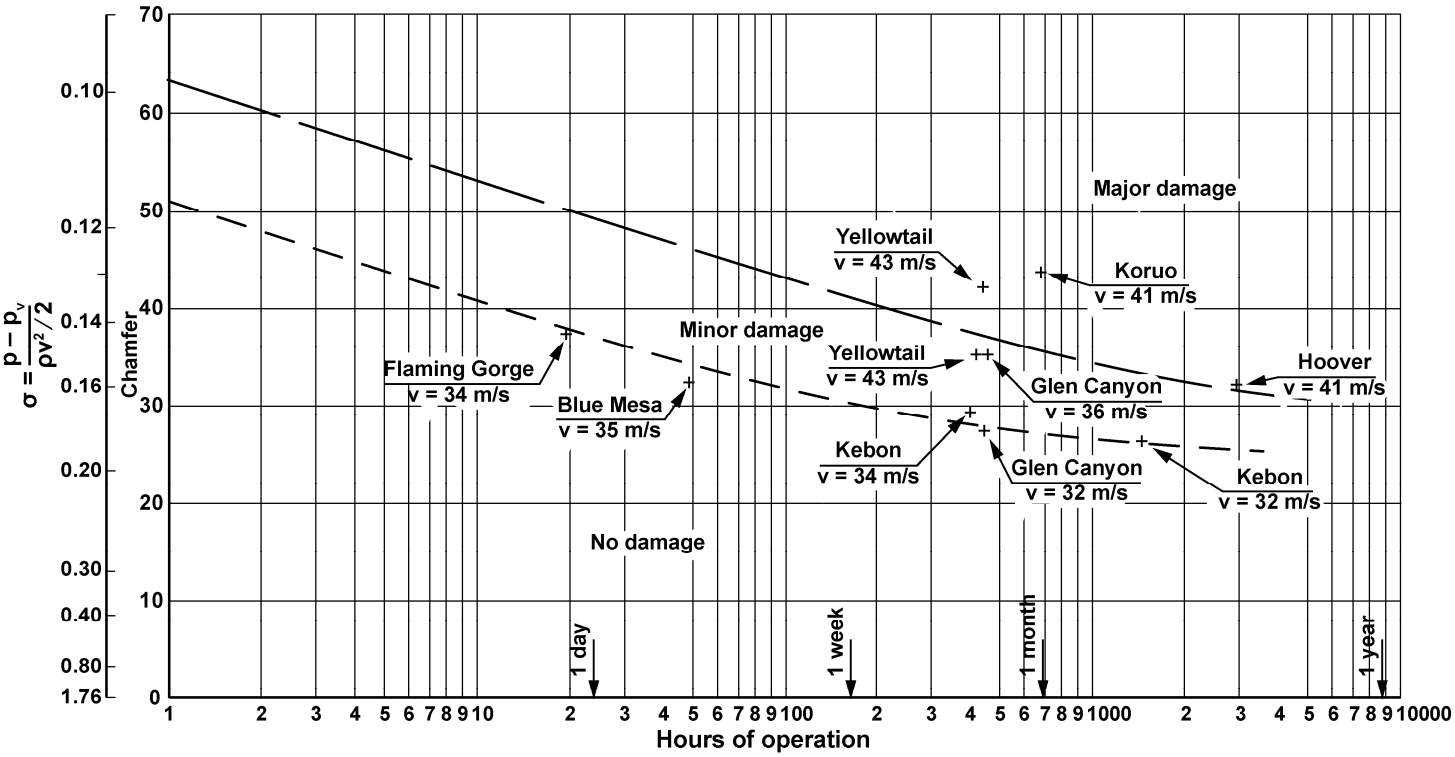

Figure 3-12.—Cavitation damage as a function of cavitation index and hours of operation (Reclamation, 1990a).

3.2.5 *Structural Design Considerations*

CRCS overtopping protection will require widely-spaced construction joints to control cracking in the concrete slabs, as is commonly done for similar types of construction, such as for concrete-faced rockfill dams, concrete pavements, and concrete water retainment structures. If no joints are provided, the concrete may crack and create joints on its own. Cracks and joints in the concrete overtopping protection will create potential locations for water to penetrate the surface and access the embankment material beneath the concrete overtopping protection. Appropriate defensive design measures are required to prevent or minimize the passage of water through the joints, as shown in Figure 3-8. These details include the installation of waterstops at the joints, continuous reinforcement across the joints, and possibly keys or other details to prevent offsets at the joints (especially for transverse joints oriented perpendicular to the flow).

The amount of reinforcement will vary depending on the site conditions, but is usually 0.5 to 0.7 percent of the gross area of the concrete slab cross section (Hensley and Hennig, 1991). The reinforcement is spliced along the width and length of the concrete slab protection as required and passes through all joints. This ensures that the reinforcement is continuous and fully developed throughout the slab. Properly proportioned reinforcement will keep joints and cracks tightly closed so that they are impervious or allow only minor seepage. The dowelling effect of the reinforcement, in combination with the aggregate interlock of the tightly-closed cracks, will also prevent offsets and help maintain structural integrity. The monolithic behavior of the CRCS should allow for localized distress to occur in the slab, within limits, without compromising the overall integrity of the concrete overtopping protection.

The CRCS proposed by Reclamation for overtopping protection of A.R. Bowman Dam (see Appendix) was designed using the Continuously-Reinforced Concrete Pavement (CRCP) computer program developed by the University of Texas. The program modeled the response of the slab for various loadings based on the properties and dimensions of the concrete, the gradation of the subgrade materials, and on limiting criteria for crack spacing, crack width, and steel stress. In order to reduce the seepage through the slab, a design crack width of 0.003 inches was selected with the temperature of the slab at 32° Fahrenheit (F).

Using the design crack width, the seepage volume through the slab during overtopping was estimated assuming laminar flow through the cracks. This information, along with estimates of the volume of the voids in the downstream shell of the embankment dam, was used to determine the potential uplift loads on the slab for design. Because no drain outlets can be located within or downstream of the location of the hydraulic jump, control of seepage in this area is critical. Seepage through the slab above the hydraulic jump was to be collected in a pipe system and discharged through aspirating drains (ASCE, 1994).

A critical design requirement for CRCS overtopping protection is the provision of suitable connections at the perimeter. The proposed CRCS for A.R. Bowman was to be restrained at the dam crest, the toe block, the left abutment, and along the left wall of the existing service spillway chute on the right abutment. Test results from hydraulic model studies, along with analyses using CRCP design techniques, were used in the structural design of each of these connections (ASCE, 1994).

The potential for differential settlement along the concrete overtopping protection should be evaluated for design. If the overtopping protection is constructed over the downstream face of a newly constructed embankment dam, the potential for settlement will be greater than if it is placed over an embankment dam that has been in place for a while and for which the settlement and consolidation have already occurred. Excessive settlement has the potential to create offsets at joints in the overtopping protection slab, and if severe, to fail waterstops and reinforcement across the joints.

3.3 *Construction Considerations*

Construction of a CRCS on the downstream face of an embankment dam for overtopping protection is similar in many respects to construction of the concrete slab on the upstream face of a concrete-faced rockfill dam for a water barrier. In order to ensure the integrity of the concrete overtopping protection, good quality control is required during construction. The following items are especially important.

- ***Concrete Tolerances.***—Specification tolerances for the concrete flow surfaces must be met. The tolerances should be selected to minimize the potential for cavitation damage (assuming that the cavitation indices calculated along the flow surface indicate the potential for damage). Complying with the specified tolerances will minimize the chance of creating offsets into the flow at transverse joints or other surface irregularities that could initiate cavitation.

- ***Joint Details.***—Details at the joints within the concrete overtopping protection are critical to preventing flow through the slab into the foundation. Waterstops should be properly embedded at both sides of the slab, and the required embedment and splice lengths should be provided for reinforcing bars that extend across the joints.

- ***Functioning Underdrain Systems.***—The underdrain system provided for the overtopping protection slab is important for controlling seepage flows and for reducing uplift pressures should stagnation pressures develop locally in the future. Efforts should be made to allow access to the drainage system in the future for CCTV inspections and possible cleaning

efforts. The drain pipes must be open and functioning during and at the completion of construction, without debris or damage.

3.4 *Vulnerabilities and Risk*

A major concern with conventional or mass concrete overtopping protection is that if the protection fails during a flood event and the underlying embankment is exposed, erosion and headcutting in the embankment materials could progress rapidly. This could lead to a breach of the dam during the flood event, with no potential for preventing the failure. In order for conventional or mass concrete to be effective as overtopping protection, the integrity of the concrete layer must remain intact and be free of significant defects during a flood event. Some of the concerns related to the integrity of the concrete protection are:

- ***Harsh climates.***—Spillways that are located in northern locations may experience large temperature fluctuations between seasons and over the course of the year. This environment may make the concrete overtopping protection more vulnerable to damage as a result of freeze-thaw cycles and thermal expansion/contraction of the concrete. Regular inspections of the concrete surfaces are important during the life of the structure to ensure that defects that could compromise the integrity of the protection don't develop or are properly repaired.

- ***Potential for settlement.***—Embankment dams can be expected to settle and consolidate over their lifetime. This will be more of a concern for a newly constructed embankment dam as compared to an existing dam that has been in operation for a long duration. The potential for future settlement of the embankment needs to be considered when designing the concrete overtopping protection.

Using conventional or mass concrete as an overlay on the downstream face of an embankment dam creates a situation where some erosion may occur underneath the slab without being initially detected. This could allow undermining of the slab and for the initiating steps of slab failure to progress to a dangerous situation without any external evidence of the developing situation. The slab will likely have sufficient strength to bridge over significant eroded areas without any signs of distress. A subsequent storm event could result in enough additional erosion to fail portions of the concrete protection, exposing the underlying embankment directly to overtopping flows. This would likely lead to rapid erosion of the embankment materials and could lead to a breach of the embankment dam during the single flood event. This initial condition has been experienced at a number of Reclamation dam spillways (see Hyrum Dam spillway discussion in the Appendix). In these spillway case histories, the foundation underneath the spillways was eroded over time and went undetected for years. The erosion was initiated by stagnation pressure flows in some cases and by seepage within the

structure foundation in others and often was facilitated by unfiltered underdrains, which serve as an exit for piped foundation materials.

Case histories of one large embankment dam for which CRCS overtopping protection was initially selected over RCC, but was never constructed (A. R. Bowman Dam) and of a smaller embankment dam for which CRCS was provided (Baldhill Dam) are provided in the Appendix.

Chapter 4. Precast Concrete Blocks

Precast concrete blocks can be used over earth materials to provide a hard surface for flow to pass safely without eroding the underlying surface, and are commonly referred to as articulating concrete blocks (ACB) when used for this purpose. An ACB system is comprised of a matrix of individual concrete blocks placed together to form an erosion-resistant revetment with specific hydraulic performance characteristics. The term "articulating" implies the ability of the matrix to conform to minor changes in the subgrade while remaining interconnected with geometric interlock and/or additional system components such as cables or anchors. These systems have also been referred to as cellular concrete mats (CCM).

There are many types of precast concrete blocks, each with its own geometry, useful application based upon hydraulic performance and erosion prevention, installation procedures, aesthetic value, and cost. Of most importance for providing overtopping protection is to select a product that has been tested under the flow conditions expected during overtopping. Applications for overtopping protection typically include high velocity flows, steep slopes, and possibly energy dissipation on the flow surface.

The four main types of articulating concrete blocks are described below.

- ***Cable-tied.***—Concrete block units that are individually formed with or without open areas, and laced together with cables into large, sometimes uniquely-shaped mattresses for installation. The blocks are normally cabled together (both longitudinally and laterally) at the manufacturing plant and are delivered to the site on flat-bed trucks for placement as a mattress with a crane. Examples of cable-tied block manufacturers include Armortec (a subsidiary of Contech®, Inc.), Petraflex®, Inc, and International Erosion Control Systems®.

  Articulating Block (AB) mats are fabric-formed, cable-reinforced, concrete mattresses that are cast in place. The AB fabric form consists of a series of compartments linked by an interwoven perimeter. Grout ducts interconnect the compartments, and high-strength revetment cables are installed between and through the compartments and grout ducts. Once filled with grout or small aggregate concrete, the AB mats become a mattress of pillow-shaped, rectangular concrete blocks. The interwoven perimeters between the blocks serve as hinges to permit articulation. The cables remain embedded in the concrete blocks to link the blocks together. AB mats include Hydrotex® products manufactured by Synthetex, LLC and Texicon® products manufactured by Donnelly Fabricators, Inc. These systems are discussed further in Chapter 9 as fabric-formed concrete.

- ***Interlocking.***—Concrete block units that are individually formed with mortise and tenon-type features that are fit together on site. Some interlocking blocks have open areas, and some are solid. Some may also use cables, but this type is generally hand-placed or brought to the site on geotextile mats. Some examples of manufacturer's products are Conlock I™, Conlock II™, and Trilock™ (produced by a subsidiary of American Excelsior Company®).

- ***Overlapping.***—Concrete block units that are tapered wedge-shaped blocks or concrete slabs that are overlapped shingle-fashion from the toe of the slope to the crest. The block units are formed at the manufacturing plant and delivered to the site on pallets. Individual units in the system are staggered and interlocked for enhanced stability. Each row of units is laterally offset by one-half of a block width from the adjacent row. When placed, the blocks form a stepped surface with slots providing open areas for venting subgrade uplift pressures. They are hand-placed, but have been cabled together on site (see Barriga Dam case study). Contech®, Inc. holds the exclusive license in the United States on the ArmorWedge™ concrete block units, patented by Reclamation.

- ***Butt- jointed.***—Commercially-available concrete construction blocks, also known as concrete masonry units (CMUs) or cinder blocks, that are normally used in the construction of walls for buildings. These have a large open area and are hand-placed with butt joints on the earth surface for erosion control. This system would only be applied to very low head installations due to failure under fairly low velocities not considered comparable for most overtopping situations (US Department of Transportation (USDOT), 1988 and 1989). Therefore, these will not be discussed further in this manual.

All types, except AB mats (fabric-formed concrete), are manufactured at a precast concrete facility using a high-volume steel mold that is shipped close to the project under construction for standard applications. Some may use a plastic form or mold to cast the blocks if a unique situation develops. Most ACBs are from 4 to 9 inches in thickness. Each product may or may not have an open area equal to anywhere from 2.5 percent for the wedge-shaped blocks, to 18-35 percent for other types of articulating concrete blocks. Some varieties of blocks rely on a vegetative cover grown in soil placed into open areas of the blocks or over the top of the blocks to improve performance. Figures 4-1 and 4-2 show several types of ACBs.

All products require placement over a smooth subgrade with a geotextile and/or a bedding or drainage layer between the subgrade and the block system. Installation requirements and techniques vary with the product and affect product performance. Product performance in overtopping or high velocity flow conditions down steep slopes varies significantly. Only products that have been tested in like conditions of the design application with flume or field test conditions should be considered for use.

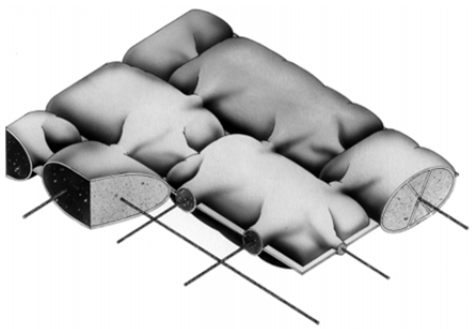

a

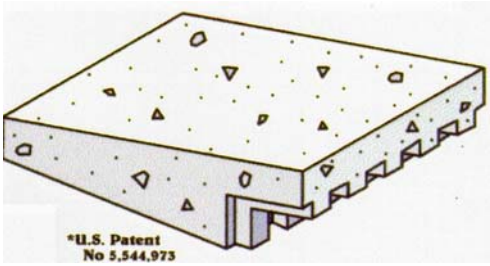

b

C

Figure 4-1.—a) Fabric-formed AB mat
b) Armorwedge tapered block
c) Concrete construction or cinder blocks (Reclamation).

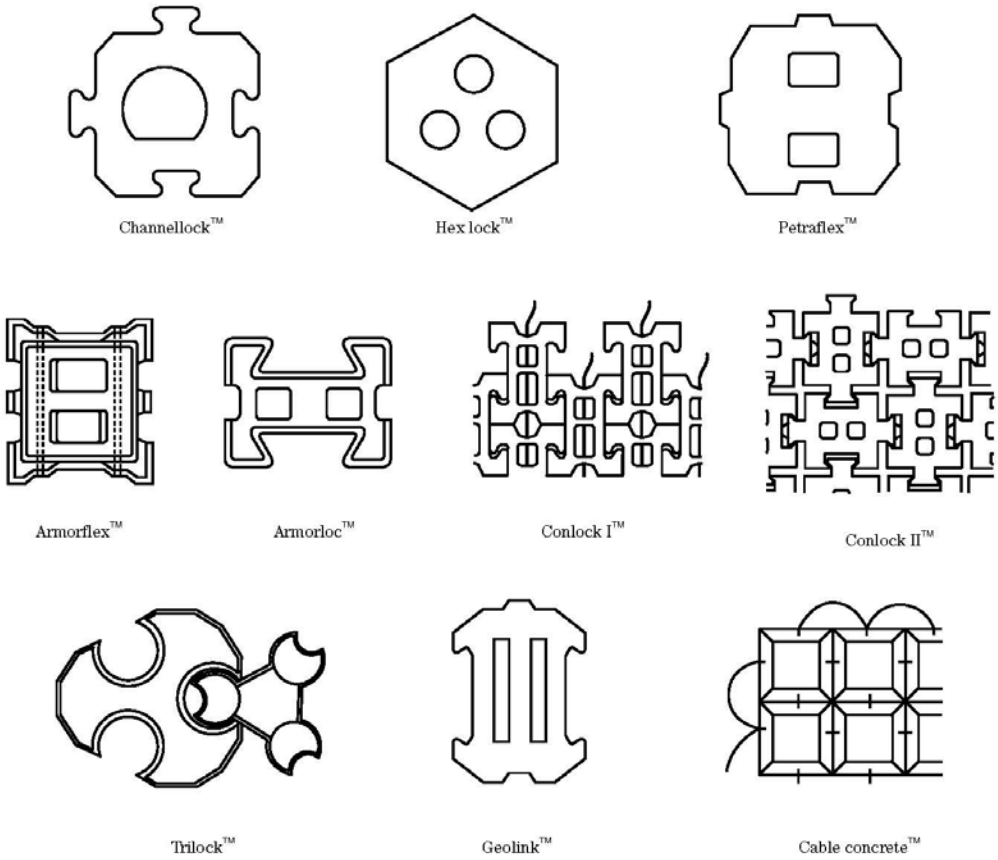

Figure 4-2.—Common examples of precast concrete revetment systems. (NRCS, 2007).

4.1 *Historical Perspective*

Concrete blocks of various forms have been used for years to protect against erosion. The use of precast concrete blocks began in response to the less than satisfactory performance of hand-placed or dumped riprap on steep slopes exposed to high flows. Articulating concrete blocks were used for protection from wave attack, armoring open channels, stream beds of relatively mild slope, and drainages, and provided the first successful hard armoring using manufactured concrete blocks that were cable-tied or mechanically interlocked. A recent design manual for placement of ACBs for stream restoration and stabilization projects was developed by the NRCS for typical placements of ACBs not subjected to high velocity flow or overtopping situations (NRCS, 2007). Cost effectiveness, and relatively easy construction methods, led to the desire to use ACBs for other applications. At the same time, many dam owners and governmental agencies, both overseas and in the United States, were being faced with new, larger floods that needed to be passed through their dams. As a result, in the late 70s and early 80s, ways of armoring embankment dams were investigated and ACB products

were developed for use with higher velocity flows on steeper slopes for passing flood flows over spillways or embankment dams.

Early work on individual precast concrete blocks was performed in the former Soviet Union in the 1970s with overlapping slabs forming wedges, and then with wedge-shaped blocks. Most of the tests were prototype installations on farm dams and then a high head power station (Powledge and Pravdivets, 1994 and Matos et al., 2001). The success of these Russian installations led to more comprehensive laboratory and field testing of a wedge-shaped block in England in the 1980s. Laboratory and field tests were performed at the University of Salford and at Brushes Clough (Baker, 1992, 1995, 2000a, and 2000b), respectively. These tests, sponsored by the Construction Industry Research and Information Association (CIRIA), Lancashire, England, led to the development of design guidance for wedge-shaped blocks based upon block thickness (Hewlett et al., 1997).

In 1983 and 1986, the U.S. Federal Highway Administration (FHWA), U.S. Forest Service (USFS), and Reclamation funded a research program at Colorado State University (CSU) using a large outdoor facility to investigate the performance of various overtopping protection methods including cable-tied and interlocking ACBs (United States Department of Transportation [USDOT], 1988 and 1989). Additional field tests were conducted in England during the late 1980s at Jackhouse Dam of several different cable-tied ACBs with various percent open areas to permit the growth of vegetation (Hewlett et al., 1987). These test programs and ACB performance results were summarized in the American Society of Civil Engineers (ASCE) Journal of Hydraulic Engineering by Powledge, et al. (1989) and by Frizell et al. (1991) in Hydro Review Magazine.

The first application of cable-tied ACBs for overtopping protection on major dam embankments in the U.S. was for three National Park Service dams on the Blue Ridge Parkway (Wooten et al., 1989). The dams ranged in height from 28 to 40 feet with crest lengths of 270 to 530 feet, with unit discharges from about 7 to 30 $ft^3/s/ft$ and with computed flow velocities up to 26 ft/s (Powledge and Pravdivets, 1994).

Federal research continued into the 1990s in Reclamation's Denver laboratory and in a 50-foot-high concrete flume facility at CSU that provided further test data on an optimized wedge-shaped block that could not be failed up to the capacity of the facility (Slovensky, 1993; Frizell et al., 1994; and Gaston, 1995). International interest in the wedge-shaped block continued with large-scale testing on a saturated embankment (Relvas and Pinheiro, 2008).

After the successful and promising initial works and testing was completed in the United States and abroad, private companies saw the value of ACB products as a means to protect some types of waterways. Private companies saw opportunities for broader applications, particularly of the easy-to-install ACB cable-tied systems. Additional knowledge was required concerning performance under

steeper slopes with anticipated flow conditions that would produce higher velocities, higher shear stresses, and an increased potential for erosion. Subsequently, most recent testing and performance criteria that has been developed is proprietary, but in some cases may be found in literature from the companies and organizations that provided the funding for the tests (e.g., Thornton et al., 2006 and Harris County Flood Control District (HCFCD), 2001). Schweiger (2002) provides a good summary of research on cable-tied and wedge-shaped blocks with design considerations.

4.2 *Design and Analysis*

Articulating block systems have been determined to fail in performance testing when the blocks lose sustained intimate contact with the subgrade. The designer should choose an ACB product that has been tested under the flow conditions for which the product is expected to perform, giving due consideration to subgrade and drainage provisions. Early prototype testing, discussed in the previous section, may not have met the later standards developed for ACB revetment performance testing, but should still be considered as valid information. All recent testing, primarily funded by private companies for cable-tied ACB systems, has followed ASTM D 7277-08, *Standard Test Method for Performance Testing of Articulating Concrete Block (ACB) Revetment Systems for Hydraulic Stability in Open Channel Flow.*

ASTM D7276 (2008) is a standard for analysis and interpretation of ACB revetment system hydraulic test data collected under steep-slope, high-velocity conditions in a rectangular open channel, and this standard is intended to be used in conjunction with the ASTM D7277 (2008) standard for performance testing of ACB revetment systems. Methods for computation of discharge, flow depths, friction slope, cross-sectional averaged flow velocity, and boundary shear stress are detailed within ASTM D7276 (2008). Furthermore, guidelines for qualitative assessment of stability are also presented and are identical to those provided in ASTM D7277 (2008).

Overall stability of the embankment under the additional hydraulic loading due to overtopping, as discussed in Chapter 1, must be investigated by a competent geotechnical engineer (Hewlett et al., 1997 and Frizell et al., 1991). This applies to any of the ACB systems being considered for overtopping, and is separate from the analysis of the hydraulic performance.

A designer must know the design features that are necessary for proper performance of the project, and the designer must perform the necessary hydraulic and geotechnical computations to ensure a stable ACB system for the project application.

Most testing has been performed—and prototype installations constructed—with uniform channel widths and parallel walls, whether vertical or trapezoidal. If the spillway walls converge (as for the overtopping protection provided for Peaks of Otter Dam, by Reclamation for the National Park Service) additional physical or numerical modeling should be performed to assure flow velocities and directions are not exceeding tested design limits.

4.2.1 *Hydraulic Design*

Hydraulic design considerations for the embankment dam overtopping condition shown in Chapter 1 on Figure 1-1 include:

- Subcritical flow from the reservoir to critical depth on the dam crest
- Potential for subatmospheric pressures developing just downstream from the crest
- Supercritical flow and maximum flow velocity, depth, and shear stress on the downstream slope over the ACB revetment
- Change from supercritical to subcritical flow at the location of the hydraulic jump and potential for pressure fluctuations over the ACB system toe, and changes in vertical profile where flows are no longer parallel to the block face (transition from chute to stilling basin)

Figure 1-1 shows the potential areas that must be addressed in the design of an ACB system. Each area has its own complicating factors:

- ***Crest.***—Identify the design flow from IDF routings to determine the design unit discharge and design head on the crest. Design data are available from testing performed by Reclamation regarding the potential low pressure zone at the break in slope from the crest to the downstream revetment in Frizell et al. (1991). Powledge et al. (1989) reported that large-scale testing failures of some block systems were due to the formation of subatmospheric pressures near the crest. The designer should anchor the revetment in accordance with the installation techniques provided by the manufacturer and with ASTM D6884-03. The area may be graded to transition from the crest to the downstream slope to minimize the development of negative pressures. The crest details must not allow water beneath the system from the reservoir or upstream pool and the crest must be well anchored. A cutoff wall and suitable connection should be provided at the embankment core. If using a wedge-shaped or individual block system, the first row of blocks should be overlapped and held in place by a cast-in-place, reinforced concrete crest cap.
- ***Slope.***—The precast concrete block system on the slope must withstand the hydraulic forces associated with the maximum unit discharge, slope

angle, and roughness of the block system. Figure 4-3 shows a typical force balance on a single unit in a cable-tied ACB system. These forces are similar for an interlocking block system. The drag force on the blocks should be computed by including both form drag and frictional drag. The destabilizing force from form drag should also include the direct impact of a vertical projection of the upstream face of a block to account for imperfections during installation. Blocks on a side slope of a channel require a separate analysis for the side slope because of the different angles involved in the analysis. These computations lead to shear stresses and safety factors that the project system must meet to ensure no loss of intimate contact with the subgrade. Flow velocities have been measured and shear stresses computed by the testing agencies or manufacturers. To date, non-proprietary data for typical cable-tied systems suggest that velocities down the revetment slope should not exceed 26 ft/s on 2:1 slopes. Manning's "n" values average between 0.026 – 0.033 for unvegetated systems. Vegetation corrections would need to be considered as necessary.

Equations for performing stability calculations that are based upon the factor of safety method have been provided by Simons, Li & Associates (1990), Clopper (1991), HCFCD (2001), and the National Concrete Masonry Association (NCMA) (2006 and 2010). The stability analysis has been improved over the years to include side slope stability (as described below). The NCMA documents are used as the current design and installation standards for ACBs.

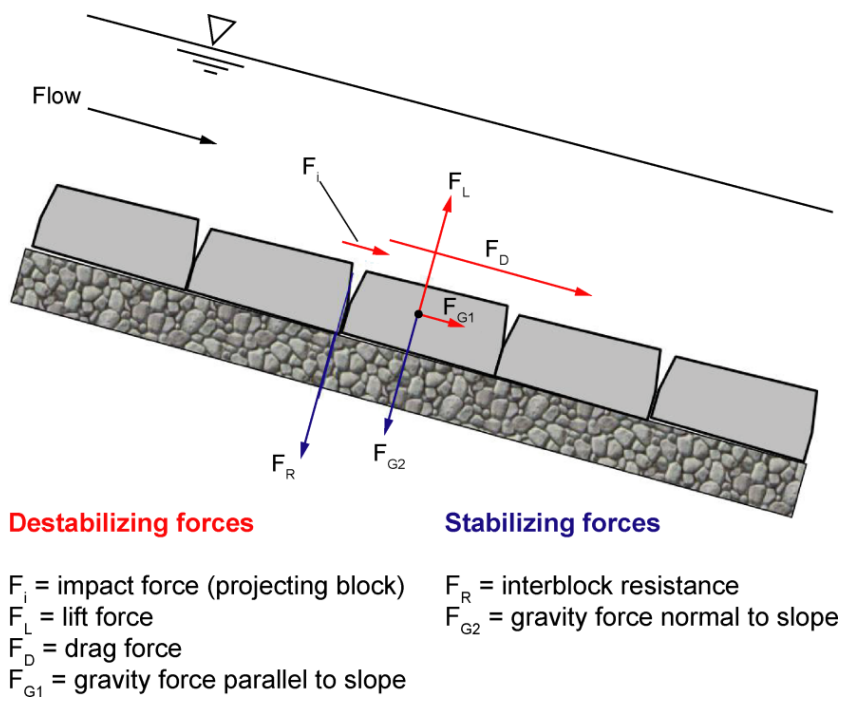

Figure 4-3.—Hydraulic forces on the typical cable-tied ACB system (Courtesy of Contech Engineering Solutions., all rights reserved).

An additional reference (Melville et al., 2006) provides an equation for stability failure of an unanchored mat or individual blocks that are neither cable-tied nor interlocked. Critical shear stresses were determined from flow depth and velocity measurements over small blocks with various protrusions.

A thesis report (Cox, 2010) provides a review of previous flume testing performed at CSU on three tested ACB systems provided by Armortec: the ArmorFlex 30s, the USACE's Block (ArmorLoc), and Petraflex. A new safety factor analysis is provided for overtopping and channel flow with blocks on a side slope. The new equations for the factor of safety incorporate a calibrated lift coefficient that better predicts the system stability. The moment stability analysis approach is a simplified model of a complex physical phenomenon and does not include the benefit of cabling. Inter-block friction is also not represented in the moment stability analysis and is encompassed within the calibrated lift coefficient, CL. Therefore, coefficient extrapolations based on varying block thicknesses, block footprints, and block weights should not be employed without further research and verification. These results are essentially specific to the three block geometries analyzed, but does show that more certainty can be achieved for block system stability with further testing and analysis. The authors also feel that more rigorous test data could be collected that would enhance the knowledge of failure of these systems.

Tapered wedge block systems are subjected to the hydraulic forces shown in Figure 4-4. Force balances are similar to the cable-tied equations, but should include an element for aspiration of subgrade pressures. Velocities up to 45 ft/s and critical depth up to 3.48 feet have been attained in flume testing on a 2:1 slope with vertical side walls (Slovensky, 1993 and Thornton et al., 2006). The Manning's "n" value that has been computed from several flume tests and the Brushes Clough prototype testing is between 0.03-0.04. Design guidance for wedge-blocks, including the use of a friction factor of about 0.08 and guidance on air entrainment and wall heights, has been developed (Frizell et al., 2000).

Side slopes may be vertical or trapezoidal-shaped, with the joint between the invert and the side slope carefully treated with concrete shaped in the block shape or as a strip running the full length of the installation. Several methods are described in Hewlett et al. (1997), tested in Relvas and Pinheiro (2008), and installed at Barriga Dam in the Appendix (Morán and Toledo, 2008 and 2013). Another case study of the Friendship Village wedge-block spillway (included in the Appendix) shows the joint between the invert and the side slope as an untreated butt joint.

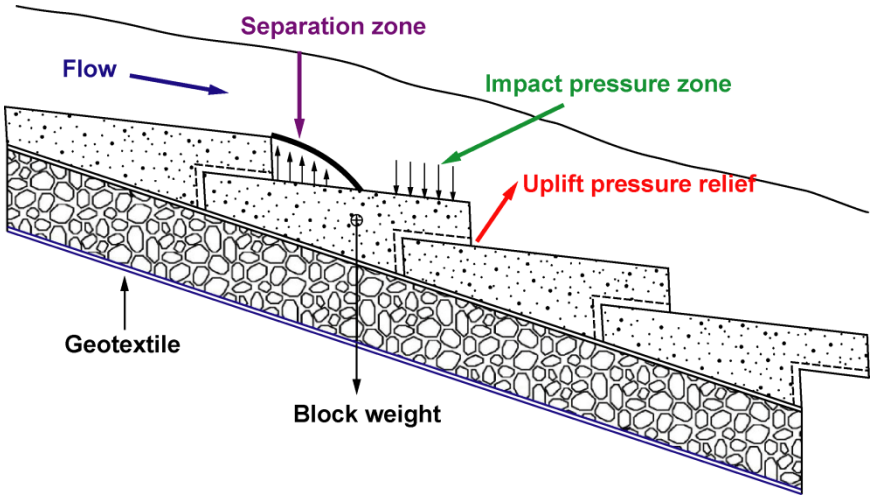

Figure 4-4.—Typical forces on a wedge-block ACB system
(Courtesy of Contech Engineering Solutions, Inc., all rights reserved).

Case studies are provided in the Appendix of wedge-shaped blocks based upon the CIRIA design guide that bases block stability on block thickness with a minimum thickness of 4 inches (Hewlett et al., 1997). The blocks in the two case histories were 4-feet-long by 3 feet-wide by 0.8 feet on the upstream end with a 0.6-foot step height. Based upon further testing in the United States as mentioned previously, these size blocks seem excessive unless a special situation exists. The CIRIA design guide (Hewlett et al., 1997) is recommended for addressing the sizing of vents at 2.5 to 5 percent of the exposed block area, and this guide includes a good procedure for determining geotechnical stability and underlayment material design.

No tapered wedge block system has failed in laboratory or large-scale flume testing situations up to the capacity of the systems. Prototype applications that have operated in the former Soviet Union provide varying flow situations and construction techniques that were not very idealized. One installation that failed, Jelyevski Dam in the Ukraine, was found to have been placed on an abutment consisting of improper fill. The failure occurred with the loss of the underdrain and embankment material through the vent holes during first operation (Baker, 2000b). Because systems have not failed due to hydraulic forces, it has been difficult to determine “failure” stresses as described in the cable-tied installations. The wedge-shaped system would be considered stable as long as 1) the overlap remains, and 2) the hydraulic connection remains between the separation zone and the underlayment (i.e. the vents remain open). Reclamation is currently developing further design guidance for wedge-shaped block applications.

Interlocking block systems have also been tested under the ASTM protocol and have proven successful under the conditions tested (Leech et al., 1999 and Abt et al., 2001). Additional information was not available, other than the case history for the Tri-lock™ system provided in the Appendix.

4.2.2 *Toe Treatment*

The toe treatment must be adequate to pass expected seepage and drainage flow, to provide support for the block system, and prevent undermining of the system. The presence of a hydraulic jump must be considered in the design by knowing the project tailwater elevation and performing the hydraulic calculations necessary to determine the location of the jump (Reclamation, 1978).

All systems have been shown to perform without the formation of the hydraulic jump over the toe of the system in often idealized flume testing situations. An adequate filter or collector drain must be designed at the toe of the slope to ensure proper drainage from underneath the block system and through the toe (Reclamation, 2004). Cable-tied and interlocking block systems are installed with a trench at the toe. Wedge-shaped blocks need a cast-in-place, reinforced concrete toe block or sill that supports the system from sliding while providing free drainage (Slovensky, 1993; Frizell et al., 1994; and Thornton et al., 2006). The toe block or sill is normally placed above the tailwater to prevent the formation of a hydraulic jump on the blocks. The blocks may also be pinned together for additional restraint.

The formation of the hydraulic jump is accompanied by increased turbulence and pressure fluctuations that must be accounted for either by the block system, in the design of a terminal structure, or by hard protection at the toe. Most overtopping situations will have enough energy at the toe for consideration in the design in some manner. If the hydraulic jump is to be located on the blocks, the following should be considered:

- For a cable-tied block system, the current design practice is to increase the block weight within the hydraulic jump. This may be sufficient as long as the selected product is not already at the maximum weight for the normal flow depth and velocity; otherwise, a different system may have to be used.

- For an interlocking block system, either the performance data are not available or are proprietary, thus its use within a hydraulic jump would generally not be recommended.

- For a wedge-shaped block system, the blocks may either be pinned or cabled together as tested under a unit discharge of 3.4 $ft^3/s/ft$ on a 2:1 slope (Slovensky, 1993) or the weight increased (Hewlett et al., 1997). Proprietary testing showed successful performance with the hydraulic jump forced by a gate at the toe of the system up to a unit discharge of 42.5 $ft^3/s/ft$ without any restraint (Thornton et al., 2006).

4.2.3 *Bedding or Drainage Layer*

The layer beneath the block system is normally comprised of one or more layers of granular material or a combination of granular material and a geotextile, which serves as a drainage or bedding layer and a filter layer, and provides the following functions:

- To assist with relief of uplift pressures below the blocks
- To protect the subsoil from erosion by drainage flow in the underlayer parallel to the slope
- To restrain soil particles on the subsoil surface against movement due to seepage exiting the subsoil and aspiration through the aeration vents of the blocks
- To provide a smooth foundation for placement of the blocks

The drainage layer may be made of free-draining granular material or an equivalent substitute using a woven geotextile. The filter layer may also be made of a granular material compatible with the embankment soil and the drainage layer or a geotextile. Filter layer design may be found in Reclamation (2011).

Flow volumes in the drainage layer beneath wedge-shaped blocks have been measured during flume testing at CSU (Thornton et al., 2006) and three-dimensional laboratory tests at the National Civil Engineering Laboratory (LNEC) in Lisbon, Portugal (Relvas and Pinheiro, 2008). These tests showed a larger percentage of drainage flow, up to 0.7 percent of the total flow, for smaller flows, then decreasing to an almost constant volume of 0.1 percent of the total flow as the discharge increased. This behavior would be expected in wedge-shaped blocks because the higher velocities associated with higher flows would provide more aspiration of flow from the underlayer than for smaller discharges.

No known measurements of underlayer drainage capacity have been documented with other ACB systems.

4.2.4 *Hydraulic Design Summary*

Design and field installation procedures should comply with the procedures utilized during the hydraulic testing procedures of the recommended system. All system restraints and ancillary components (such as drainage mediums and confining geogrid) should be employed as they were during testing. For example, if the hydraulic testing installations use a drainage layer, then the field installation must use a drainage layer of a similar design and composition.

The theoretical force-balance equation used for performance extrapolation of thicker concrete units based on actual hydraulic testing of thinner units will

produce conservative performance values. When establishing performance values of thinner units based on actual hydraulic testing of thicker units, there is a tendency to overestimate the hydraulic performance values of the thinner units. Therefore, all performance extrapolation must be based on actual hydraulic testing of a thinner unit then relating the values to the thicker units in the same "family" of blocks (HCFCD, 2001).

In all systems, there has been no credit given in the hydraulic analyses to the interblock restraint, overlap, cables (if used by the system), or soil anchors. Therefore, it is generally accepted that an inherent conservatism exists in cable-tied and/or interlocking systems. Although soil anchors used to be routinely installed with early cable-tied systems, they are currently used only when determined necessary to provide an extra measure of conservatism.

4.3 *Construction Considerations*

Cabled mattress products consist of ACBs that may interlock together, but are also tied by cables running both longitudinally and laterally. The cables are normally installed at the concrete manufacturing plant and the cabled sections are delivered to the site on flat bed trucks for installation (unless site conditions require them to be delivered on pallets and installed individually). Each cabled mattress section is placed by a crane, using a spreader bar (Figure 4-5), and then the exposed cables are attached to the adjoining section and the seams are grouted in place. The cabled mattresses can be installed along a sloped surface or beneath the water line.

Figure 4-5.—Cabled ACB section being delivered and installed (Reclamation).

Wedge-shaped blocks and interlocking blocks are delivered to the site on pallets and placed by hand. ArmorWedge blocks have been cabled after placement as an extra precaution from vandalism or potential settlement of the dam (see the Barriga Dam case study in the Appendix). The applicable ASTM standards for ACB revetment systems should be followed for construction and installation of any system.

ACB units and individual concrete blocks are precast at the factory and should be in good condition and meet specification requirements when delivered to the site. Subgrade preparation is critical to proper installation of the designed system. The foundation should be free of all obstructions such as roots and projecting stones, and should be graded to provide smooth slope transitions. Proper placement of bedding layers, drainage layers, and compatible filter layers or comparable geotextiles, where specified, is essential. Attachment points are critical to the entire system and must be properly secured. ASTM D 6884-03, *Installation of ACB Revetment Systems*, should be closely followed during construction.

4.3.1 *Materials*

Most concrete block products are dry cast at a factory or manufacturing plant near the site using a mold supplied by the manufacturer. Some are wet cast (using a higher water-cement ratio) if uniquely shaped (e.g., Barriga, Bruton, Fitzwarren case studies). All products should meet the requirements of ASTM D6684-04, Standard Specification for *Materials and Manufacture of Articulating Concrete Block (ACB) Revetment Systems*. The materials used to manufacture the concrete blocks should meet all applicable ASTM standards. A minimum concrete compressive strength of 3,500 lb/in^2 is typically specified for block products delivered to the site, in accordance with ASTM D6684.

The critical subgrade design and preparation for ACB systems should follow ASTM D1241-00, *Standard Specification for Materials for Soil-Aggregate Subbase, Base, and Surface Courses*.

Final acceptance of the geotextile materials, if used, will be dependent upon the geotextile performance when tested in accordance with ASTM D5101-12, *Standard Test Method for Measuring the Filtration Compatibility of Soil-Geotextile Systems*, or with ASTM D5567-94, *Standard Test Method for Hydraulic Conductivity Ratio (HCR) Testing of Soil/Geotextile Systems*.

The cables used for the cable-tied systems are usually stainless steel, galvanized steel, or polyester. All have performed competently in testing and field installations and must meet applicable ASTM standards as specified by the ACB manufacturer.

4.3.2 *Installation Quality Control*

The manufacturer of the ACB system for the project should provide on-site inspection and guidance throughout the project. Written installation procedures are also available for each system from the manufacturer.

4.4 *Vulnerabilities and Risk*

Only cable-tied and wedge-shaped blocks have been used as ACB overtopping protection on embankment dams in the U.S. to date. There is more performance data available for these two systems and additional safety associated with the cabling and the overlapping in the systems that provides a greater level of confidence (Schweiger, 2002).

Any overtopping protection design using an ACB system must be accomplished as tested under large-scale laboratory situations. This means that the drainage system and anchor details should be closely matched to those tested, and any use of a geotextile should be confirmed with testing. Geotextile performance directly beneath an ACB may reduce overall system performance (depending upon the material properties and site conditions), whereas a gravel drainage layer or other highly permeable layer beneath an ACB system has been typically shown to be highly beneficial. Geonets have been used successfully between the gravel drainage layer and the ACB system.

The largest pitfall facing a designer of an ACB system is obtaining and understanding the hydraulic performance test results of the products. The references cited here can be used for that purpose; however, additional proprietary data specific to a manufacturer's product should also be consulted. The designer must clearly know the goals of the project and be able to match those with the testing that has been successfully completed for the various products. There are also regulatory restrictions in some States that prohibit the use of overtopping protection for embankment dams (such as California), while other States allow certain types, and some have no policy. In any case, it is the designer's responsibility to submit the required engineering design details that will show adequate "proof of no failure" (Schweiger, 2002). New Jersey is one State that has published guidelines for design of overtopping protection systems (Moyle, 1996).

4.4.1 *Potential Failure Modes*

ACB systems have been determined to fail in performance testing when the blocks lose sustained intimate contact with the subgrade. Failure would occur from removal of the blocks and/or large deformations in the foundation or subgrade that expose the underlying material to erosion. Failure due to removal of individual blocks or a cabled mattress occurs when:

- The shear forces produced by the flowing water exceed the frictional force between the blocks and the bedding layer, and/or the confinement of the blocks
- The uplift forces produced by the water beneath the system exceed the weight of the block and/or the confinement of the blocks
- Erosion occurs at an open joint in the system, (e.g., toe, crest, side, or adjacent to an individual block).
- An improperly placed or lifted block exposes the upstream edge of the block to high velocity flow that is redirected beneath the system.

Failure of individual blocks or cabled mattresses may cause the system to unravel from that point downstream. Erosion of the foundation will occur and a headcut will advance to the crest if the duration of the overtopping event is long enough. Failure caused by hydraulic loading should be avoided by a competent hydraulic analysis and by careful site inspection during construction. A closed-cell ACB system failed and drained Kingstowne Park Reservoir in Fairfax County, Virginia, during a heavy rain in 2010 (Kravitz, 2010).

Failure caused by deformation of the foundation would occur by the following:

- Water during operation of the system saturates the subsoil leading to a reduction of shear strength and a deep slip failure of the embankment
- Shallow slip along a plane parallel to the face of the embankment caused by down-slope forces on the blocks and an adjacent layer of soil exceeding the local shear resistance along the underside of the soil layer
- Settlement of the block system caused by removal of the drainage layer beneath the blocks through the vents in a wedge block system, or through the openings of an interlocking block system

Older ACB systems were anchored using rigid soil anchors. It is difficult to determine the benefit of these and they potentially prevent a system from conforming to a slightly deformed or settled subgrade. If anchors are used, a cable

anchor that would allow system flexing may be preferable. Also, anchors can puncture a geotextile if used beneath the system, creating a potential path for piping. The potential foundation failure modes should be addressed by a competent geotechnical engineer.

4.4.2 *Vandalism or Block Damage*

Block durability may be improved by making the blocks thicker or by increasing their weight if the designer is concerned with the blocks breaking or cracking due to debris laden flow, human or animal traffic, or vandalism. The Barriga Dam wedge-shaped block was scaled up by Reclamation in accordance with the procedure developed during testing protocols and discussed by HCFCD (2001).

A wedge-shaped block was broken up with a sledge hammer but left in place during the first Reclamation tests for the blocks in the 1990s. The block pieces were not removed under flows of about 32 $ft^3/s/ft$ and the broken block did not lead to system failure (Slovensky, 1993).

Potential vandalism concerns with ArmorWedge blocks were partially addressed by measuring the mechanical force required to remove a standard ArmorWedge™ block weighing 50 pounds from the test flume after completion of the tests (Slovensky, 1993 and Thornton et al., 2006). Overlapping of the blocks within the matrix enhances the block resistance to removal. Blocks tend to compact down the slope with both gravity and the hydraulic forces acting on the system. Prying with a crowbar was initially attempted but could not be done. The measured force to remove a block from the matrix ranged from 500 lb near the crest to 1,000 lb near the bottom of the slope.

The standard ArmorWedge™ block system did not fail during testing; however, the flume test situation is idealized because it is a narrow installation. On a prototype, the possibility exists that the embankment or rockfill could settle and the blocks could move up, down, or from side to side. However, as long as the overlap remains, it is felt that the system would behave similarly to the test facility and would require a similar force to remove.

4.5 *Maintenance and Inspection*

The ACB overtopping protection system should be inspected on the same schedule as the rest of the dam. It should also be inspected after experiencing any flow. A method should be devised to check for voids beneath the revetment surface. Either a mechanical means of probing or sophisticated electronic equipment could be used. Grade at all upstream and downstream ends of the systems should be carefully maintained to match the surface of the block system and avoid any protruding blocks. The geotextile fabric beneath the blocks, where used, should be resistant to penetration.

If vegetation is called for as part of the design and integral to the system performance, then it should be maintained to the level called for by the specifications. No woody plants or trees should be allowed to grow through the blocks. Evidence of any invasive animal activity should be noted and addressed.

The inspection should identify any cracked or broken blocks. Testing of some ACB systems has shown that cracked or even broken individual blocks that are still interlocked with the adjacent blocks may not produce a failure. For example, cracked interlocking open-celled Tri-Lock blocks placed for overflow channels on 3:1 slopes were shown in a field installation at the Richmond Hill Mine in South Dakota to not fail during flows producing velocities up to 17 ft/s and maximum shear stresses exceeding 9 lb/ft^2 (greater than assumed for design) (Jacobs et al., 2004). However, cracked or broken blocks should generally be replaced as part of a proper maintenance program. If the owner decides a block must be replaced, an individual block may be broken and removed, and most likely replaced with cast-in-place concrete of similar geometry.

For wedge-block systems, the block vents must be clear during flow events due to potential uplift concerns. Early research did not address covering the blocks with soil and vegetation. However, many projects now require precast concrete block systems to be covered with vegetation for aesthetic reasons. Recent tests by the ArmorWedge™ manufacturer have shown that soil cover will wash from the system (Thornton et al., 2006). However, there was no vegetation grown on the surface. If vegetated, the root system would need to be shallow enough to avoid contact with the blocks, and allow complete removal of the vegetation and the soil under flow conditions. To ensure the block vents remain clear, soil cover is not recommended for wedge-block systems.

Several case histories of ACB overtopping protection systems for embankment dams are provided in the Appendix; however, none of these systems has operated to date. These case histories include a cable-tied system for Strahl Lake Dam, a non-cable-tied system for Richmond Hill Mine, and tapered wedge-block installations for Barriga Dam in Spain, Bruton Flood Storage Reservoir in England, and Friendship Village in the United States.

Chapter 5. Gabions

Gabions are rectangular-shaped baskets or mattresses fabricated from wire mesh, filled with rock, and assembled to form structures such as gravity retaining walls, lined channels, overflow weirs, hydraulic drops, and other erosion control structures. Gabions are also used for spillways and as overtopping protection for small embankment dams as discussed in this chapter. Gabion baskets are generally stacked in a stair-stepped fashion, while mattresses are generally placed parallel to a slope.

Gabion baskets and mattresses are often manufactured from hexagonal woven steel wire mesh, as specified in ASTM A975. Welded wire gabion baskets and mattresses, conforming to ASTM A974, are also available and offer heavier gauge and more rigid products. Hot dip galvanization, zinc treatments, polyvinyl chloride (PVC) coatings, and stainless steel wire products are available, depending on the site-specific corrosivity exposure and desired design life. The gabions are delivered to the project site with the baskets formed, but collapsed for delivery and handling (Figure 5-1). At the project site the gabions are expanded to form the baskets and mattresses (Figure 5-2). Once placed, the gabions are filled with rock, generally from 2 to 8 inches in size (Figure 5-3). Placement of the rock may be by machine for production purposes or by hand methods if a more aesthetic finished product is desired. Completed gabion structures are shown on Figures 5-4, 5-5, and 5-6.

Figure 5-1.—Example of gabion baskets delivered to the project site (Reclamation, courtesy of Chris Ellis).

Figure 5-2.—Typical unfilled gabion basket on left and mattress on right. Each is formed with compartments to minimize rock movement within the gabion and deformation of the overall structure. Hexagonal woven steel wire mesh gabions are shown (Reclamation, courtesy of Chris Ellis).

Figure 5-3.—Example of welded wire gabions filled with various rock sizes. (Courtesy of GabionBaskets.net, all rights reserved).

Figure 5-4.—Example of gabion spillway crest structure. (Courtesy of Concrib, all rights reserved)

Figure 5-5.—Example of a gabion channel and drop structure.
(Courtesy of Juntong Guanda, all rights reserved)

Figure 5-6.—Gabion erosion protection on slope of embankment. Zamoly Reservoir, Hungary (Courtesy of Pannon Gabion Kft, all rights reserved).

Gabion baskets are typically divided into cells by diaphragms (often at 3-foot centers) to reduce rock movement that can cause deformation. To reinforce the structure, the corners and edges of the baskets are tied and reinforced with heavier gauge wire to prevent unraveling and minimize deformation. Heavier gauge wire and ties are also used to join the adjacent gabions, forming one continuous structure.

Gabion baskets and mattresses are available in a variety of sizes, convenient for forming a range of geometries. The empty baskets are generally light and can be placed by hand. Once assembled, the gabions form flexible, permeable, rugged,

monolithic structures. Gabions depend mainly on the interlocking of the stones and rocks within the wire mesh for internal stability, and the assembled structure's weight to resist hydraulic and earth forces. The wire mesh simply keeps the rockfill in place.

Gabions have advantages over loose riprap because of their modularity and rock confinement properties, thus providing erosion protection with generally less rock volume, within a smaller footprint, and with smaller rock sizes than loose riprap. Reducing the required rock volume and rock size for gabions to provide a similar level of erosion protection—as loose riprap can provide a significant reduction in construction cost. Gabions also have advantages over more rigid structures as they can:

- Conform to ground movement
- Be easily constructed and repaired
- Dissipate energy from flowing water
- Be designed to drain freely

However, permeability may reduce over time as the voids in the rockfill become progressively filled with silt, promoting vegetation growth.

Some disadvantages of gabions include appearance, since the wire is exposed (although the use of attractive stone, colored wire coating, and vegetation may alleviate this concern) and durability, since the wire mesh may be subject to abrasion and corrosion damage (although special resistant coatings and materials are available to increase the design life). Gabions are also more susceptible to damage from debris and from vandalism compared to other types of dam overtopping protection, such as RCC or ACBs, requiring more frequent maintenance and repair. As for other types of overtopping protection, gabions can make detection of changed seepage conditions within the embankment and abutment more difficult.

Design considerations for gabions as embankment dam overtopping protection, including hydraulic energy dissipation and erosion protection, are described in this chapter. Additional design and construction considerations, advantages, and disadvantages are also provided.

5.1 *Historical Perspective*

A form of gabions were originally used in Egypt and made of woven rushes (reeds or tall grasses). Beginning in the 16th century, engineers in Europe used wicker baskets—Italian *gabbioni*—filled with soil to fortify military

emplacements and reinforce river banks. The U.S. military continues to use modern gabions as temporary barriers for blasts or small arms fire.

The use of wire-bound "sausages" was introduced by Maccaferri in 1894 to repair the breach of the River Reno at Casalecchio, Italy. The USACE and others initially investigated the use of gabions for stream bank stabilization and erosion protection and found that they require less material and are significantly more stable and cost effective than loose riprap. Significant research investigating the use of gabion baskets or mattresses for water storage and flood passage while preventing erosion were carried out by Stephenson in the late 1970s, using hydraulic model studies involving flume tests of stacked gabion baskets. Stephenson provided some information on energy dissipation (1979a) and stability (1980). In 1982, an experimental study of gabions under high velocity flow was conducted at Colorado State University (CSU) for Maccaferri (Simons et al., 1984). Dodge (1988) and USDOT (1988) also performed hydraulic studies on gabion mattresses and stacked gabion baskets under high velocity flows similar to those expected in overtopping flows.

The Food and Agriculture Organization of the United Nations (FAO) has used gabions to build spillways for earthen dams in developing countries (Charman et al., 2001). The FAO developed a guide for designing small earthen dams with gabion spillways, intake weirs for irrigation channels, river revetments, and erosion protection measures. The emphasis of the FAO design guide is on empowering local communities without engineering expertise and therefore includes careful discussion of all aspects of the project design and construction using simple means. De Marinis et al., (2000); Fratino (2004); Chinnarasri and Wongwises (2006); Chinnarasri et al., (2008); and Fratino and Renna (2009) have conducted studies of the influence of rock size, shape, and void fraction on gabion performance and have made comparisons of flow conditions and energy dissipation for gabions versus concrete stepped spillways.

5.2 *Design and Analysis*

Design and analysis for a gabion structure must address:

- Hydraulic capacity
- Energy dissipation
- Anchoring details
- Seepage and filter compatibility
- Stability
- Foundation preparation

5.2.1 *Hydraulic Capacity*

Overtopping tests performed on various types of gabion protection systems have indicated satisfactory performance for unit discharges up to 40 $ft^3/s/ft$ and for flow velocities exceeding 30 ft/s (ASCE, 1994). The hydraulic design procedures for a typical gabion structure to be used for overtopping protection, or for an auxiliary spillway over an embankment dam, may be found in Charman et al. (2001), and in Simons et al. (1984), based on testing and analysis performed for Maccaferri. These comprehensive references are readily available to any designer and incorporate the work of Stephenson (1979a, 1979b, and 1980) and of Peyras et al., (1992).

Maccaferri provides software for the design of gabion channels and weirs. Their design guides were developed from laboratory studies performed from the late 1970s into the early 1990s. They are based upon maximum velocities and shear stresses developed during those studies for mattresses and stepped baskets (Stephenson, 1980, 1991; Simons et al., 1984; Peyras et al., 1992; and USDOT, 1988). Their stage-discharge analysis calculates the discharge capacity and other hydraulic characteristics of a channel section of specified geometry.

Reclamation (Dodge, 1988) tested gabions placed on 6:1 and 4:1 embankment slopes and subjected to a unit overtopping discharge of 40 $ft^3/s/ft$. The model represented 3- by 3- by 3-foot gabion compartments containing angular rock up to 12 inches in diameter and placed on a filter bed. Also tested was an 18-inch-thick rock mattress and filter bed anchored to the embankment crest and 4:1 downstream slope. During these tests, there was no indication that the gabion baskets or mattresses would fail, although sagging and bulging of the compartment tops due to rockfill movement was noted. The modeled slope velocities exceeded 30 ft/s for all tests (ASCE, 1994).

Simons et al. (1984) conducted tests of gabion mattresses on 3:1 and 2:1 embankment slopes for overtopping depths up to 4 feet with velocities ranging up to 19 ft/s. Each mattress measured 8-feet-long by 4-feet-wide by 6-inches-deep, and was placed on a non-woven filter fabric. The mattresses were laced together at each seam and filled with 3- to 6-inch rounded stones. The mattresses were relatively stable during testing, although two failures occurred due to loss of the crest anchorage. As with the Reclamation tests, basket deformation was reported as a result of migration of the rockfill to the downstream end of each compartment (USDOT, 1988). Smooth gabion mattresses placed on a slope should probably be limited to a unit discharge of 10 $ft^3/s/ft$ to minimize the potential for damage (Peyras et al., 1992).

5.2.2 *Energy Dissipation*

Stepped gabion weirs offer greater structural stability and resistance to water loads than sloping mattresses, and provide energy dissipation on the stepped face. Hydraulic model studies were performed by Peyras et al. (1992) at a 1:5 scale for

3.3- by 3.3- by 9.8-foot hexagonal mesh baskets filled with 6- to 9-inch (scaled) stones and placed in various stepped configurations. Overtopping flows from 7.5 to 30 $ft^3/s/ft$ were discharged over slopes of 1:1, 2:1, and 3:1, on embankments from 10 to 16 feet high. This research permitted the evaluation of different types of overtopping flow, and provided downstream head measurements to quantify the amount of energy dissipation for stilling basin design (ASCE, 1994).

These model studies revealed two basic types of overtopping flow: nappe and skimming. In nappe flow, energy is dissipated upon impact with the lower step and within the turbulence resulting from dispersal of the nappe, with or without formation of a hydraulic jump. At higher discharges, the nappe disappears and skimming flow occurs as the flow velocity accelerates to a maximum or terminal velocity under uniform flow conditions (18 to 20 ft/s in the tests). The flow skims over the step lips and bottom rollers, and turbulence develops as air is entrained (ASCE, 1994). Nappe flow and skimming flow may be predicted with the same equations as for smooth concrete steps. Energy loss equations were developed by Chamani and Rajaratnam (1994) and Fratino (2004) for predicting nappe flow, and by Chanson (2005) for skimming flows, including adjustments for aeration to represent the greater energy dissipation occurring on the gabion steps compared to smooth concrete steps.

The key parameters governing overtopping flow for gabions are slope, drop height, step profile, unit discharge, and gravitational acceleration. Based on the experimental results from Peyras et al. (1992) for plain gabion steps, design curves were developed for the head loss, ΔE, between the crest and toe, and for the flow depth at the downstream toe, d_1. The equation (Equation 5-1) for predicted head loss, ΔE, is:

$$\Delta E/H = 1 - a_1 D^{b1} \qquad \text{Eq. 5-1}$$

Where:

D = the dimensionless drop number = $\frac{q^2}{gH^3}$

q = the unit discharge in $ft^3/s/ft$

H = the height of the drop in feet

g = the acceleration of gravity in ft/s^2

a_1 and b_1 are coefficients depending upon the slope.

The equation (Equation 5-2) for flow depth at the downstream toe, d_1, is:

$$d_1/H = a_2 D^{b2} \qquad \text{Eq. 5-2}$$

Where:

D = the dimensionless drop number as defined above

H = the height of the drop in feet

a^2 and b^2 are coefficients depending upon the slope.

Peyras et al. (1992) provides the following values for the coefficients a and b (Table 5-1), and a series of curves defining the energy dissipation (Figure 5-7) and flow depth at the downstream toe (Figure 5-8), for various slopes between 1:1 to 3:1 and for gabion spillways having 2 to 7 steps, with step heights ranging from 0.65 to 3.3 feet. In Fratino and Renna (2009), the coefficients a_1 and b_1 are equal to 4.31 and 0.635, respectively, for a 4:1 slope. Note that Equation 5-1 assumes uniform flow conditions have been attained, which may not occur on a low gabion structure. Work by Chinnarasri and Wongwises (2006) and Chinnarasri et al. (2008) seemed to over-predict energy dissipation and would, therefore, not provide the conservative result that is typically required for stilling basin design.

Table 5-1. Design coefficients for plain gabion steps (Peyras et al., 1992)

Slope	a_1	b_1	a_2	b_2
1:1	4.195	0.526	0.313	0.263
2:1	5.918	0.654	0.314	0.247
3:1	4.808	0.647	0.342	0.248

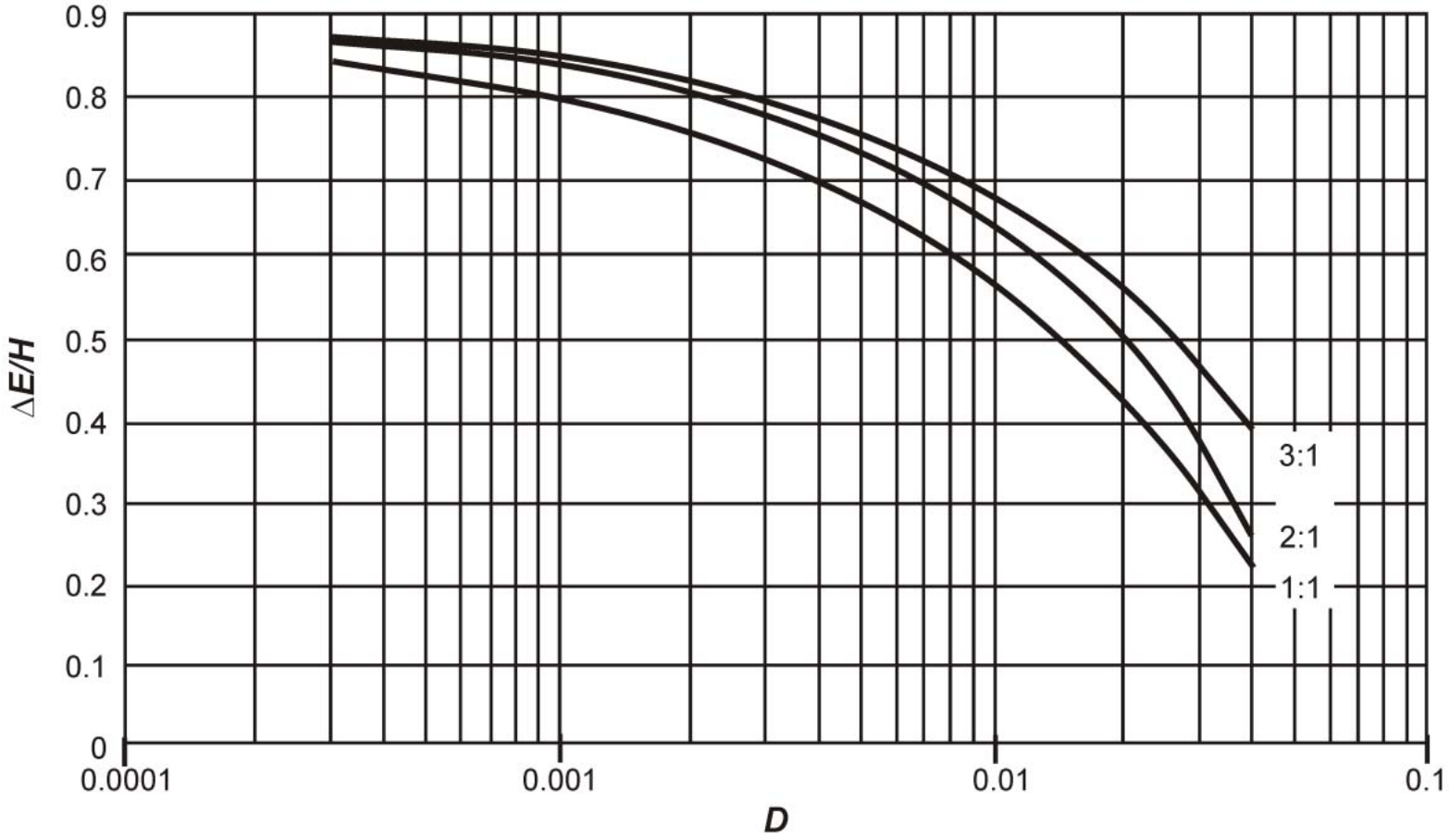

Figure 5-7.—Unit head loss over plain gabion steps (Adapted from Peyras et al, 1992).

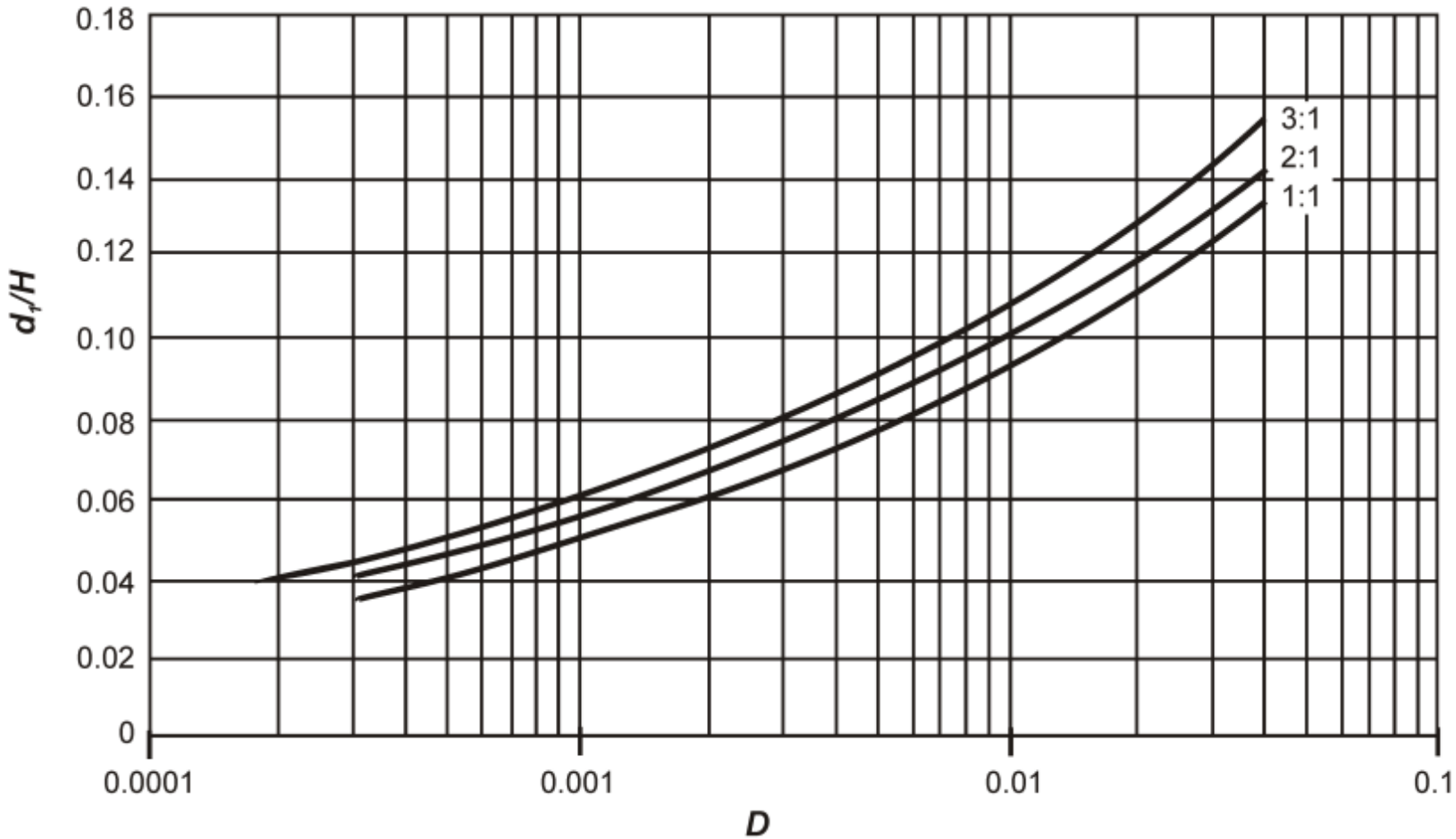

Figure 5-8.—Depth at toe of plain gabion spillway (Adapted from Peyras et al, 1992).

Fratino and Renna (2009) also investigated the influence of rock size, shape, and packing or porosity on the energy dissipation characteristics of stepped gabions. Testing was conducted within the 2-foot-wide flume shown in Figure 5-9, with ten gabion steps each 8-inches-thick forming a 4:1 slope, and subjected to a unit discharge of up to 4.5 $ft^3/s/ft$. This testing revealed that stone size and shape do not significantly influence the flow conditions on the stepped gabion slope for both nappe and skimming flow. The earlier work by Peyras et al. (1992) regarding energy dissipation on gabion steps was therefore confirmed.

Figure 5-9.—Laboratory test facility at the University of Bari, Italy (Courtesy of Fratino and Renna, 2009, all rights reserved).

A stilling basin for a gabion spillway may be designed for a given drop height, H; unit discharge, q; and slope by determining the flow depth, d_1, at the downstream toe (as defined above), the conjugate depth, d_2, for the hydraulic jump, and the tailwater elevation. The conjugate depth (Equation 5-3) may be determined from the Froude number, F, at the downstream toe, with $F = q / (gd_1^3)^{0.5}$, as follows:

$$d_2 = 0.5\, d_1\, [(1 + 8F^2)^{0.5} - 1] \qquad \text{Eq. 5-3}$$

The required stilling basin floor elevation may be determined by subtracting the conjugate depth from the tailwater elevation for the design condition. The length of the stilling basin (or downstream apron) may be estimated as 6 times the conjugate depth for a 1:1 slope, with greater lengths required for flatter slopes (up to 15 percent longer for a 3:1 slope) (Peyras et al., 1992).

The model tests by Peyras et al. (1992) indicated some deformation of the gabions due to movement of the stones (see Figure 7-6 in Chapter 7). Tightly packed, angular stones at least 1.5 times larger than the mesh size (but less than the thickness of the mattress) are recommended. For flows greater than 15 $ft^3/s/ft$, the mesh and lacing should be stiffened by adding diaphragms to reduce compartment loads. Potential debris loads may require the addition of 2 to 4 inches of protective concrete on the step surfaces. For increased stability and energy dissipation, the gabions may be tilted upstream about 10 percent to provide a rising lip. Design overtopping flows should generally be limited to 32 $ft^3/s/ft$ (Peyras et al., 1992).

5.2.3 *Anchoring Details*

Gabions baskets and mattresses may be used to construct a spillway and stilling basin or to provide erosion protection along a dam embankment crest and downstream slope for overtopping scenarios. Anchoring the gabion spillway or overflow structure to the crest of the embankment is critical to the performance of the structure. Securing the gabion structure to the crest of the embankment may be accomplished by constructing a runout extending some distance along the upstream slope (approximately 10 to 15 feet) or by excavating an anchor trench just upstream of the crest and backfilling the first gabion mattress in the trench (Figures 5-10 and 5-11).

An estimation of the hydraulic shear forces acting on the approach apron should be compared to the gabion basket tensile strength, runout frictional resistance, and/or anchor trench resistance. The tensile strength of the selected woven or welded wire mesh may be used to estimate the gabion basket's tensile strength per unit width. The tensile strength of the tied basket connections should also be considered. Frictional resistance may be estimated along the contact between the bedding materials and the gabions by calculating the effective stress at the base of the gabion layer and by using an appropriate friction angle. Inclination of the bedding layer should be considered when calculating the frictional resistance. Passive resistance provided by the anchor trench may be estimated by calculating the passive earth pressure on the downstream side of the anchor trench. The depth of the upstream anchor trench should also consider the potential for scour of the embankment materials upstream of the trench (USDOT, 1988).

An anchor trench should also be constructed at the downstream end of the stilling basin or downstream apron to prevent headcutting (Figure 5-10). A scour analysis should be performed to determine the appropriate downstream anchor trench depth where excavation to bedrock is impractical (Annandale, 2006). A riprap blanket over a bedding layer may be provided beyond the end of the gabion structure for additional scour protection.

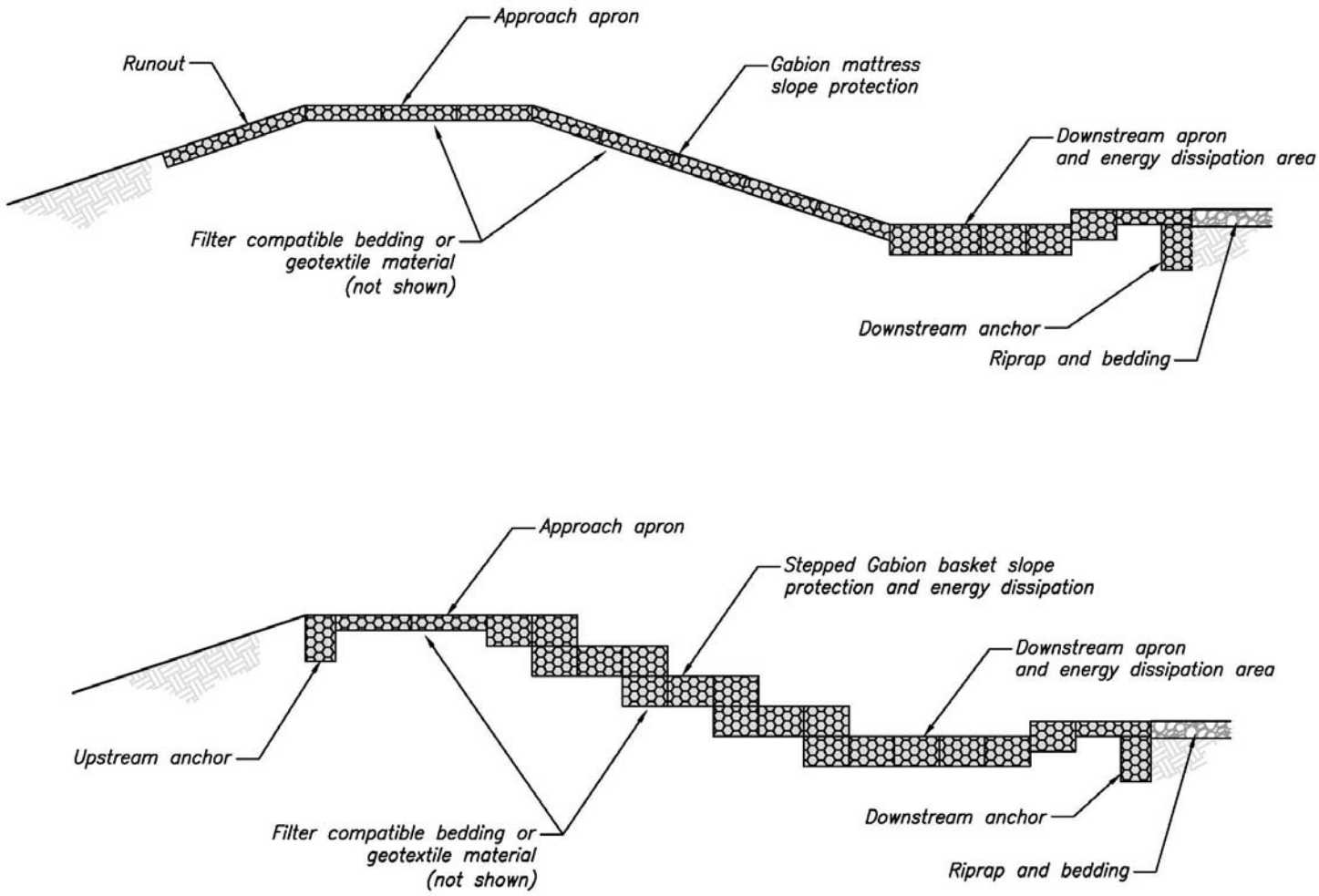

Figure 5-10.—Example gabion sections for overtopping protection and energy dissipation (Reclamation, courtesy of Chris Ellis).

5.2.4 *Seepage and Filter Compatibility*

Gabions are considered free-draining due to the void space between the rockfill. This free-draining zone placed along the downstream slope of the embankment can serve as a drain for seepage passing through the embankment. However, gabions placed on the downstream slope can make it more difficult to identify changed seepage conditions and can mask seepage exit locations. The void space within the rockfill also has the potential to serve as a repository for eroded embankment materials. Given enough time, continued erosion of the embankment materials could progress to a dam failure. Therefore, a filter compatible bedding layer or geotextile material should be designed to prevent seepage or overtopping flow from eroding the underlying surface and transporting embankment materials into or through the gabion structure.

A granular bedding layer is generally placed and compacted in preparation for the gabion construction (Figure 5-11). The bedding layer will serve as a foundation for the gabions and as a filter to prevent migration of embankment materials into the gabion rockfill. Selection of the appropriate bedding material gradation should consider the underlying embankment material's gradation (base soil) and the selected gabion rockfill size. Filter compatibility analysis and selection of an appropriate bedding gradation should be completed using procedures outlined in FEMA's *Filters for Embankment Dams* manual (2011). Thickness of the bedding layer(s) should allow for compaction with heavy equipment and be thick enough to have confidence there are no thin areas or flaws in the filter section. The bedding material immediately beneath gabions should also be resistant to hydraulic forces during overtopping that might cause the material to migrate upwards into the gabion rockfill. A bedding compatibility check should be performed using procedures outlined in Reclamation's Design Standard No. 13, Chapter 7, *Riprap Slope Protection*, (Reclamation, 2014)[4].

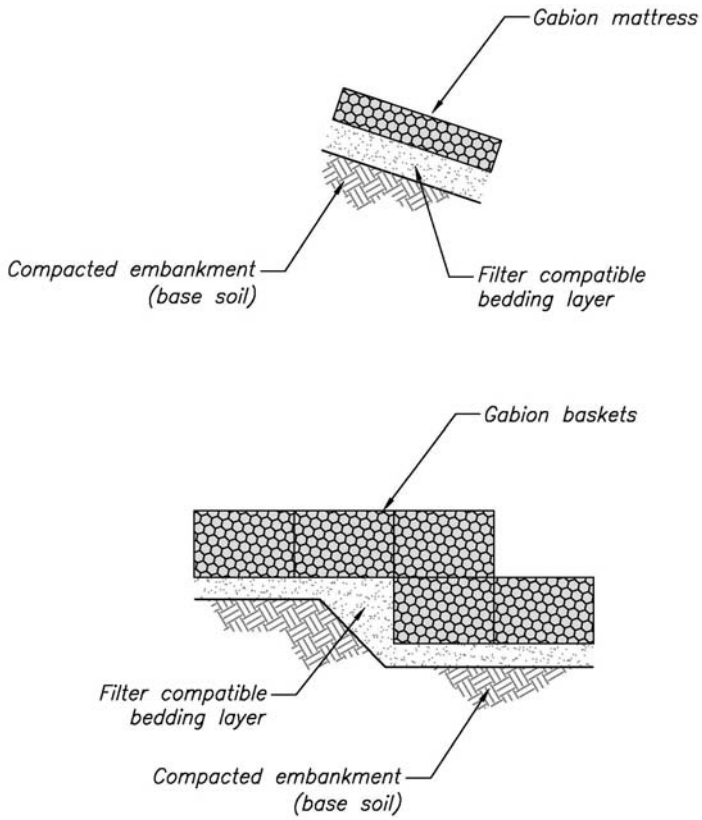

Figure 5-11.—Example filter/bedding layer for gabion construction (Reclamation, courtesy of Chris Ellis).

[4]This Reclamation design standard was being updated at the time of this manual preparation. The reader may also refer to the 2001 version of Design Standard No. 13, Chapter 7, but note there are additional bedding criteria considerations provided in the updated 2014 version.

Where the embankment has internal filter and drainage zones, a compatible downstream coarse rockfill zone, or where seepage analysis shows that it is unlikely for seepage to exit beneath the gabion structure, then a filter compatible bedding layer may not be required. However, for a fine-grained homogeneous embankment, the bedding layer may need to be a multiple-stage filter (i.e. two or more), transitioning from a sand material to a gravel material. The potential for migration of the underlying material into the gabion rockfill during overtopping should always be considered.

Where locally borrowed sand and gravel filter materials are not available or where commercially-produced materials are cost prohibitive, a geotextile may be considered (Figure 5-12). The geotextile should be carefully selected to prevent the underlying embankment materials from migrating into the gabion rockfill while providing adequate drainage capacity. In the United States, geotextiles are not commonly accepted as filters in dam construction or used as the primary defense against internal erosion. If the geotextile could be considered critical to the safety of the dam, then a granular bedding material should be used instead. Additional concerns related to the use of geotextiles are provided in FEMA's *Filters for Embankment Dams* manual (2011). Where the embankment has an engineered filter zone and the geotextile would be a secondary line of defense against internal erosion, then geotextiles may be appropriate and likely cost-effective. Procedures for selecting the appropriate weight, durability, and apparent opening size (AOS) are provided in FEMA's *Geotextiles in Embankment Dams* manual (2008). Special care should be taken during construction to avoid puncturing and/or tearing the geotextile.

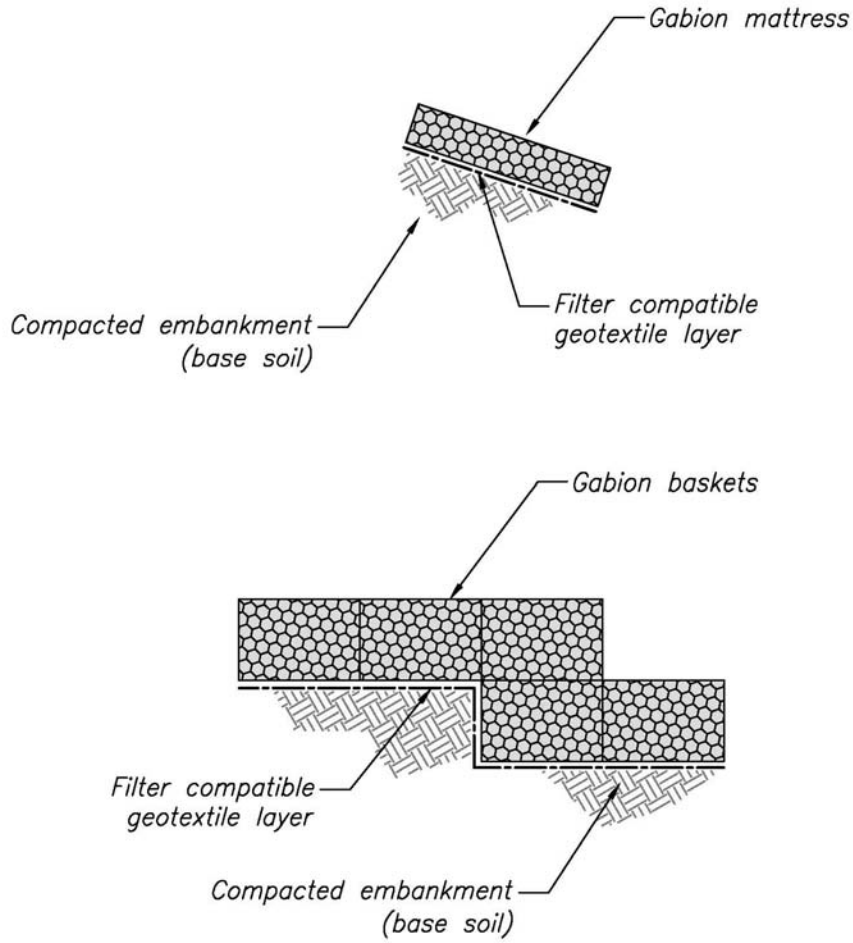

Figure 5-12.—Example geotextile bedding layer for gabion construction (Reclamation, courtesy of Chris Ellis).

5.2.5 *Stability*

Gabions used for the side walls of a spillway chute or stilling basin should be analyzed as a gravity retaining wall. Conventional earth pressure design procedures should be used to determine lateral forces that act against the unsupported section of the gabion structure. Stability calculations for sliding and overturning should be completed for each unique wall cross section. Bearing capacity should also be analyzed. Where stability is questionable, either:

- The width of the wall should be increased,
- The unsupported wall height should be decreased, or
- A stepped or battered wall should be considered.

Internal stability of the gabion wall is of less concern, as interlocking and frictional resistance between the rockfill and wire mesh confinement generally

provide adequate stability. Where internal instability is possible, a more angular rockfill should be specified or heavier gauge wire should be selected. Internal stability concerns will likely be limited to gabions used to form tall hydraulic drops or tall channel sidewalls.

Global slope stability of the gabion structure should also be considered. Gabions have the tendency to creep when placed on steep slopes and may require a thickened section at the toe of the slope to provided additional passive resistance. Where geotextiles are used as a bedding material, the potential for slipping along this interface should be evaluated using infinite slope analysis equations and other analyses as appropriate.

5.2.6 *Foundation Preparation*

Prior to placing the bedding layer or geotextile, the foundation of the gabion structure should be shaped and well compacted. Surface irregularities, loose material, vegetation, and all foreign matter should be removed from the foundation. Where stepped gabion baskets are used, the foundation surfaces should be leveled. Gabion mattresses may be placed on a sloping foundation, which should also be compacted prior to placement. Granular bedding material should be well compacted and the surface free of mounds, dips, or windrows.

5.3 *Availability*

There are a number of gabion manufacturers in the United States providing full service designs and manufactured products. The designer is encouraged to contact a number of manufacturers and suppliers when considering the appropriate product for their project. Proximity to the project site, lead time, and cost should also be considered.

The rock fill can represent a significant portion of the gabion construction cost. Rock may be quarried and processed at the project site or imported from commercial sources. Rock availability will vary greatly, depending on the location.

5.4 *Construction Considerations*

The most important construction consideration is to have a contractor that is familiar with gabion installation procedures. While assembling and filling the gabions does not require highly-trained laborers (Figure 5-13), obtaining an experienced contractor with regards to foundation preparation, connection of the adjoining baskets, and efficient placement sequencing may be essential to the project's success. Manufacturers and suppliers can help identify local contractors with whom they have had recent success. Inspectors should also be familiar with gabion installation procedures.

Gabion assembly and filling instructions should be developed and included in the specifications. These are often available from the manufacturers and suppliers and may be used to help develop the specification requirements. Procedures should cover basket placement and alignment, cross-tie and stiffener placement, rock placement, and securing the lids.

Figure 5-13.—Gabion baskets on slope being filled with rock, Milltown Dam Removal project in Milltown, Montana (Courtesy of Envirocon, all rights reserved).

5.4.1 *Materials*

There are a number of wire mesh gabion basket manufacturers available. Due to the often lower cost provided by double-twisted hexagonal mesh (DTHM) gabions, their usage has become commonplace in the United States. DTHM gabions should conform to ASTM A975. Materials used to make the gabion mesh include hot-dipped galvanized wire, which can be classified by the amount of zinc coating into common (50 g/m^2) and high (250-270 g/m^2); electro-galvanized wire; and Galfan steel wire, which uses a Zn-Al alloy low carbon steel wire (either 5 or 10 percent). Galfan gabion mesh has a high corrosion resistance performance, which is about 2 to 3 times higher than that of the common galvanized gabion mesh under any conditions. Galfan gabion mesh also has a high ductility and deformability. It can withstand the test of winding and twisting under powerful deformation processes, and the zinc coating will not peel off. Galvanized wire baskets can be expected to have a life of up to 40 years and examples exist over 80 years old (Charman et al., 2001).

A PVC coating may be applied to the wire to provide additional protection for use in polluted, contaminated, or aggressive environments: in salt, fresh water, acid soil, or wherever the risk of corrosion is present. The PVC coating typically has a nominal thickness of 0.02 inches (0.50 mm), and the coating can be applied after either electro-galvanizing or hot-dipped galvanizing. A variety of colors are available, such as grey, grass green, and dark green.

Welded wire gabion baskets are also available, constructed with heavier gauge wire and available in stainless steel and even copper mesh. Welded wire gabion baskets are typically more rigid, allowing for construction of more uniform lines, and have more resistance to deformations. Welded wire gabions may be more advantageous when forming spillway sidewalls or steps along the slope. Welded wire gabions should conform to ASTM A974. It should be noted that the strength of the welded wire connections are somewhat less than what is provided by double-twisted mesh gabions. If large deformations, excessive abrasion, or impact loads are expected, DTHM gabions should be considered. Corrosion-resistant galvanized or PVC-coated welded wire mesh gabions are also available.

Rock used to fill the gabions must be of high strength and quality and not likely to degrade or abrade over time. Specifications for hardness, durability, and specific gravity of the rockfill should be established. At a minimum, the following should be specified.

- Specific gravity, ASTM C127, minimum: 2.60
- Absorption, ASTM C127, maximum: 2 percent
- Loss, Sulfate Soundness, ASTM C88, maximum: 10 percent
- Loss at 100 cycles, Los Angeles Abrasion, ASTM C131, maximum: 10 percent
- Loss at 500 cycles, Los Angeles Abrasion, ASTM C131, maximum: 40 percent

5.5 *Vulnerabilities and Risk*

A common challenge when designing gabions for overtopping protection is the extrapolation of limited flume-tests to the site specific geometries and anticipated hydraulic loadings for a project. The limits include drop height, unit discharge, slope, and requirements for downstream energy dissipation for channel, spillway, or dam overtopping scenarios.

Anchoring at the crest of the dam embankment or spillway is vital to the performance of the gabion erosion protection. This was clearly pointed out by USDOT et al. (1988) where the gabion systems consistently failed at the crest without upstream anchoring. Providing a proper anchor and/or cutoff at the

downstream end of the structure is also important to prevent undercutting. Figure 5-14 shows excessive scour at the toe of a structure with inadequate energy dissipation before returning to the main channel.

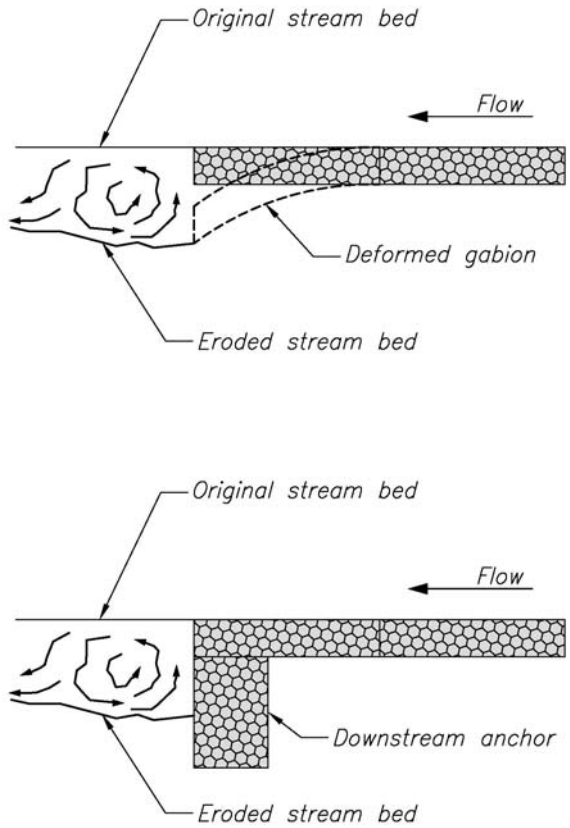

Figure 5-14.—Example gabion structure without and with proper downstream anchor (Reclamation, courtesy of Chris Ellis).

Other observed failure modes have included:

- Inadequate foundation soil preparation leading to differential settlement and potential structural damage
- Inadequate bedding material or filter material, resulting in migration of foundation materials through the gabions and loss of foundation support (Figure 5-15)
- Improper attachment between gabion joints, allowing flow to undermine the structure
- Overstressed or corroded mesh systems
- Improper soil or concrete and gabion interfaces

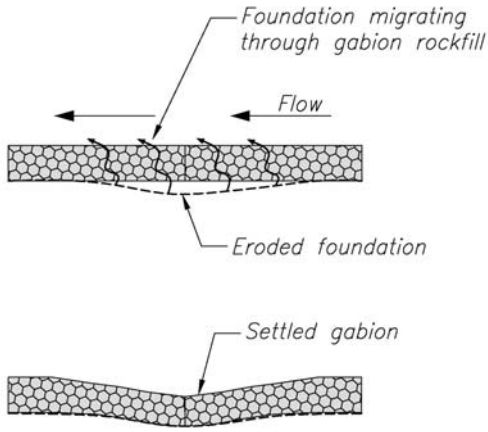

Figure 5-15.—Example foundation erosion/migration and gabion settlement (Reclamation, courtesy of Chris Ellis).

Gabions placed in frequently operated locations with heavy sediment or gravel bed load may experience abrasion damage to the wire baskets leading to premature failure of the structure. Where there is the potential for large floating debris to damage the gabion structure, the gabion wires should be carefully inspected and repaired following the flood event. Concrete caps may also be used for protection against abrasion damage.

The most common damage occurring in gabion structures is the rupture of the gabion baskets. This can occur due to continuous abrasion of bedload and debris against the wire, long-term corrosion, excessive settlement, or through vandalism. When wires break or if the basket opens, the stones become loose, and the structure loses its shape and rigidity—and consequently its function. Gabions can empty even without breaks in the baskets. If the impact of the water flow is particularly violent, and the stones are not durable, rock inside the gabions can progressively degrade through shaking and abrasion until they are lost through the gabion mesh openings. This should be avoided if rock of high strength and quality, meeting the recommended specifications above, is used.

Gabions experiencing degradation and loss of the rockfill should be repaired as soon as possible. The baskets should be opened, and the remaining material inside should be completely removed. Assuming the baskets themselves are in good condition, they can be filled with new rock material and then closed again. Where the exposed wire mesh is damaged, it can be cut away and replaced with new baskets.

If inadequate bedding materials are used, there is the potential for the supporting materials to be eroded and result in settlement, deformation of the gabion structure, and possibly tearing of the gabion wire (Figure 5-15). Gabion baskets typically have sufficient strength to span small voids; however, if the voids

continue to expand then the gabion structure will conform to the void. These deformations may negatively affect the hydraulic performance of the gabion structure.

If excessive deformation occurs, one of two methods can be applied:

- Restore the gabion structure to its original shape by placing additional gabions on top of the settled areas. This method may be preferred if the gabions have settled into a stable position.

- If continued settlement and deformation is expected, it may be preferable to remove and replace the damaged gabions with new ones on an improved foundation and bedding layer.

A case history of a gabion spillway constructed on an embankment dam (West Cornfield Dam) is provided in the Appendix.

Chapter 6. Vegetative Cover, Turf Reinforcement Mats, and Synthetic Turf Revetments

Vegetative cover maintained on the downstream faces of embankment dams provides some protection against normal weathering effects and rill development due to rainfall. During small overtopping flows of short duration, vegetation can also provide protection against the initiation of concentrated erosion that can otherwise lead to headcut development and dam breach, and may allow for the planned use of the embankment to convey a portion of a flood hydrograph. For larger flow rates and/or for longer overtopping durations, vegetation alone may not fully protect against failure, but vegetation may delay breaching sufficiently to permit evacuation of downstream areas. Vegetative cover is most viable as an overtopping protection method for small dams in humid climates that receive sufficient moisture to establish relatively dense, uniform turf grasses. Good maintenance of the grass cover is essential to achieve significant protective benefits. Grass needs to be cut relatively short on the downstream face of an embankment dam (between 2 and 6 inches) to facilitate visual inspections and to promote uniformity of growth. Vegetative cover is generally not suitable for very steep embankments because of the difficulty of mowing and other maintenance required to achieve a uniform cover. Installation costs for vegetation are often lower than for other forms of overtopping protection, but maintenance costs can be higher. An advantage of vegetative overtopping protection systems, where applicable for use, is the potential for unlimited sustainability via annual growth and renewal, if proper maintenance can be achieved.

Vegetation provides protection to an embankment in two ways:

(1) Protection of the soil surface by reduction of velocities and shear stresses at the embankment boundary as a result of the coverage provided by stems and leaves that lay down in the flow and blanket the surface

(2) Reinforcement of the underlying soil due to the presence of plant roots

The reinforcement aspect may be further improved by the use of turf reinforcement mats that can improve root mass continuity following full vegetation establishment. Some types of turf reinforcement may also provide a soil surface protection benefit before grass becomes fully established. Reinforcement can be provided by a variety of materials, broadly classified by Hewlett et al. (1987) into the categories of geotextile reinforcement and concrete reinforcement. This chapter addresses natural vegetative cover, geotextile reinforcements, and synthetic turf revetments. Geotextile reinforcements consist

of fabrics, meshes, or mats that allow the grass plant to grow through the reinforcement, so that grass roots bind around the geotextile fibers to create an integrated geotextile/soil/root mass, and the established surface has the appearance of 100 percent grass. Synthetic turf revetments consist of engineered synthetic turf underlain by a structured geomembrane and infilled with a special blend of cementitious materials for ballast. Chapter 4 deals with precast concrete block protection systems, which include block placements having open cells filled with soil and grass.

6.1 *Historical Perspective*

6.1.1 *Vegetative Protection*

Vegetative protection of embankment dams against weather-related erosion and rill development is as old as embankments themselves, and there is a long history of the use of vegetation as the first layer of protective cover in spillways and storm runoff channels experiencing infrequent flows. The design objectives of such protection can vary from the prevention of erosion during minor, frequent events as a means of reducing regular maintenance costs, to the prevention of erosion during design-flow conditions corresponding to higher and less frequent flow rates. Temple et al., (2003) provides an excellent overview of the history of testing and development of design procedures for grassed waterways, which dates back to tests conducted by the Soil Conservation Service in 1935 at Spartanburg, South Carolina. Work has continued on the topic since that time at USDA laboratories in several locations, most notably the ARS laboratory at Stillwater, Oklahoma. Design procedures have evolved from early graphical tools that established permissible velocities and related flow resistance (expressed by Manning's "n") to the product of velocity and hydraulic radius (defined as flow area divided by wetted perimeter), with individual curves that were specific to discrete retardance classes characterizing the type, size, and quality of vegetation. This approach was further generalized in the 1980s (Temple, et al., 1987) into an erosionally effective tractive stress method that was amenable to graphical, computerized, and hand-held calculator solution (see Section 6.2.1). In this approach, a retardance curve index represents the length and density of the vegetal elements and a single equation form is used across all retardance classes.

Although vegetative protection has long been provided on embankments, it was not until the mid 1980s that engineers began to accept that it could have value beyond the purpose of weather protection (Riley, 1986). Research to determine the limits of vegetation performance in earth spillways led to methods for predicting the thresholds of vegetation failure due to accumulated erosion of the underlying soil through the vegetal cover or due to instantaneous failure of the vegetation itself by stripping of thinly rooted sod or complete destruction of the vegetal material due to gross turbulent hydraulic stress (Temple, 1987).

Experience in the spillway environment and further testing in channels having similar slopes as embankment dams (Hanson and Temple, 2002) showed that vegetation can provide significant protection against the onset of headcut erosion. This may mean the survival of a structure for some flood loadings or a significant delay in the breach of a spillway or dam in other cases. In recent years, the concept of an allowable amount of overtopping flow for embankment dams has become more fully developed and accepted as the reliability of predictions of the permissible amount and duration of such flow has improved, and the need for passage of larger floods has increased. The ARS's WinDAM B computer model can estimate allowable overtopping discharges for embankment dams protected by unreinforced vegetation or riprap. (Visser et al., 2012).

6.1.2 *Turf Reinforcement*

To improve upon the erosion protection provided by plain grass, turf reinforcement methods were developed to help protect the surface soil particles, grass seeds, and seedlings (especially during the period before full turf establishment) and improve the lateral continuity between grass plants. Judging by references cited by Hewlett et al. (1987) and others, the development of vegetation reinforcement systems began in the mid 1970s with the rapid development of man-made materials including geotextile fabrics. Hewlett et al. (1987) report on tests of both geotextile and concrete reinforcing systems and state that the purpose of each is to enhance the engineering functions of plain grass while retaining its environmental and economic benefits.

Although two types of turf reinforcement are recognized, only the geotextile systems are treated in this chapter, while precast concrete protection systems are discussed in Chapter 4. Today, the two primary sources of information about geotextile protection systems (other than proprietary information from geotextile manufacturers) are still from the 1980s: Hewlett et al. (1987), describe testing performed in the United Kingdom for the (CIRIA); and USDOT (1988) describe work done in the United States for the FHWA and Reclamation.

Hewlett et al. (1987) subdivided geotextile protection systems available in the 1980s into three main groups:

- ***Two-dimensional.***—Woven fabrics and meshes with essentially no thickness. The weave should not be so tight that it restricts plant growth through the fabric. Fabrics have very small apertures (similar to cloth) and provide significant protection to the bare soil surface, which is beneficial during the period of cover establishment. Meshes have larger apertures that provide little or no protection during cover establishment, but are beneficial for increasing the integrity of the established cover when roots become interwoven into the mesh.

- ***Three-dimensional open***—Woven synthetic meshes having significant thickness (> 20 mm), which are placed in an unfilled condition and then filled with topsoil after seed has been sown.

- ***Three-dimensional filled***—Synthetic mats filled at the time of manufacture with bitumen-bound gravel chips that are still loose enough to permit natural growth of vegetation through the mat.

Some of the specific products tested for CIRIA and FHWA are still commercially available while others have disappeared from use, and many new products have become available. However, the categories described by Hewlett et al. (1987) still encompass most of the available materials. The summary result from the work of Hewlett et al. (1987), confirmed by USDOT (1988), was that in general, three-dimensional filled products and the more tightly woven two-dimensional products offer some immediate protection to the soil surface during the period of grass establishment, but three-dimensional open products provide the best performance after grass is fully established. This may be due to the fact that the infilling of three-dimensional open materials eliminates voids below the geotextile, and the resulting protective layer is relatively permeable compared to more tightly woven materials and the pre-filled mats, which allows for uplift pressure relief.

6.1.3 *Synthetic Turf Revetment*

An innovative erosion protection technology was developed in 2010 for embankment dams and levees that uses artificial or synthetic turf instead of natural grass or hard armor (i.e., RCC, ACBs, and rock riprap) to eliminate the long-term maintenance requirements and potential weaknesses of traditional vegetative and hard armor systems. HydroTurf™[5] combines a durable, engineered synthetic turf underlain by a high-friction impermeable geomembrane with an integrated drainage layer:

- The synthetic turf is infilled in place with a special blend of cementitious materials for ballast, having a compressive strength of 5,000 lb/in^2.

- The cementitious infill is placed dry to a thickness of approximately 1 inch and then hydrated with a light spray of water to produce an erosion-resistant surface. Its high strength is capable of resisting potential damage from vehicles, debris, and burrowing animals.

This system thereby offers the environmental and aesthetic benefits of natural vegetation (i.e., low-turbidity surface runoff and natural appearance) as well as the performance and maintenance benefits of hard armor. A typical installation is shown in Figure 6-1.

[5] Patented product of Watershed Geosynthetics LLC.

Figure 6.1.—HydroTurf™ Outfall Structure with St. Johns River Water Management District in Florida (Courtesy of Watershed Geo, all rights reserved).

6.2 *Design and Analysis*

Plain Vegetative Protection

The design and analysis of a plain grass protective layer on an embankment dam can be accomplished using the erosionally effective stress method described in detail by Temple et al. (1987), updated by Temple et al. (2003), and summarized for application to the allowable overtopping of earthen dams by Temple and Irwin (2006). This method considers the hydraulic attack in the form of shear stress and separate erosion-resistive characteristics of the vegetation and underlying soil.

Application of the erosionally effective stress method begins with consideration of the flow conditions over the dam crest. To accommodate the largest possible overtopping discharge, the crest should be level throughout its length to minimize flow concentrations. Since most embankment dams have some degree of nonuniformity of the crest profile due to camber, the hydraulic attack of the flow should be evaluated at the location of minimum crest elevation and maximum unit discharge.

Flow conditions down the slope are generally represented by uniform flow calculated from Manning's equation (Equation 6-1), as follows.

$$Q = 1.\frac{486}{n} A R^{\frac{2}{3}} S^{\frac{1}{2}}$$ Eq. 6-1

Where:

Q = total discharge

n = Manning's coefficient representing the total roughness of the vegetated surface

A = channel area

R = hydraulic radius, equal to the channel area divided by the wetted perimeter

S = slope of the energy grade line = sin θ, where θ is the slope angle from horizontal

If calculations are carried out on a unit discharge basis, and with the assumption of a hydraulically-wide channel (i.e. with R = D), the flow depth can be determined directly from Equation 6-2:

$$q = \frac{1.486}{n} D^{5/3} S^{1/2}$$ Eq. 6-2

Where :

D is the depth of flow and the other variables are known.

If a wide channel is not assumed, then *A* and *R* in Equation 6-1 must be replaced by appropriate functions of flow depth for the specific channel shape and the depth can be determined by iterative solution knowing Q, *S*, and *n*.

Manning's "n" is determined as a function of the stem length and density of the vegetal cover and the unit discharge on the slope. Temple et al. (1987) provide general relations that incorporate effects of soil particle roughness, boundary form roughness, and vegetal roughness, but for practical purposes simplifies the key relation down to (Equation 6-3):

$$n = e^{C_I(0.0133(\ln(VR)^2) - 0.0954\ln(VR) + 0.297) - 4.16}$$ Eq. 6-3

Where:

CI = a retardance curve index that must satisfy the requirement 0.0025CI2.5 ≤ VR ≤ 36

V = flow velocity, computed knowing the discharge, flow depth, and channel shape

R = hydraulic radius

The value of C_I is computed in Equation 6-4 from parameters of the vegetal protection as:

$$C_I = 2.5\left(h\sqrt{M}\right)^{1/3} \qquad \text{Eq. 6-4}$$

Where:

h = representative vegetal stem length in feet

M = average vegetal density in stems per square foot (see Table 1)

For a hydraulically-wide channel, both A and R are equal to the flow depth, D, and the combination VR is equal to the unit discharge q, allowing Manning's equation and the full system of equations just presented to be solved directly. For a channel with a finite width (or less than about 6 times the flow depth), an iterative solution is required as indicated above.

Once the flow depth down the slope has been determined, the gross hydraulic stress, τ_o, and the erosionally effective hydraulic stress, τ_e, can be determined using Equations 6-5a and 6-5b:

$$\tau_o = \gamma DS \qquad \text{Eq. 6-5a}$$

$$\tau_{e=}\tau_o(1 - C_F)\left(\frac{n_s}{n}\right)^2 \qquad \text{Eq. 6-5b}$$

Where:

τ_o = gross hydraulic stress on the vegetated slope

τ_e = erosionally effective hydraulic stress

γ = unit weight of water

d = flow depth (measured normal to the slope)

S = slope of the energy grade line

C_F = vegetal cover factor

n_s = soil grain roughness of the material supporting the vegetation

n = Manning's coefficient representing the total roughness of the vegetated surface

The parameters of these equations are discussed by Temple et al. (1987). For fine-grained material typically found on vegetated embankment slopes, the soil grain roughness, n_s, has a value of 0.0156. If the grass cover is uniform, the cover factor, C_F, varies with the type of cover (as characterized by grass species and stem density) as shown in Table 6-1. Three uniformity classifications are recognized: uniform cover, minor discontinuities, and major discontinuities. If uniform cover exists, the value of C_F can be taken from Table 6-1.

Table 6-1. Properties of grass channel linings having good uniform stands of each cover (Temple et al. 1987).

Cover factor, C_F	Covers tested	Reference stem density, M (stems/ft^2)[1]
0.90	bermudagrass	500
	centipedegrass	500
0.87	buffalograss	400
	kentucky bluegrass	350
	blue grama	350
0.75	grass mixture	200
0.50	weeping lovegrass	350
	yellow bluestem	250
0.50	alfalfa[2]	500
	lespedeza sericea[2]	300
0.50	common lespedeza	150
	sudangrass	50

Notes:

[1]Multiply the stem densities given in the table by 1/3, 2/3, 1, 4/3, and 5/3, for poor, fair, good, very good, and excellent covers, respectively. The equivalent adjustment to C_F remains a matter of engineering judgment until more data are obtained or a more analytic model is developed. A reasonable, but arbitrary, approach is to reduce the cover factor by 20 percent for fair stands and 50 percent for poor stands. C_F values for untested covers may be estimated by recognizing that the cover factor is dominated by density and uniformity of cover near the soil surface. Thus, the sod-forming grasses near the top of the table exhibit higher C_F values than the bunch grasses and annuals near the bottom.

[2]For the legumes tested, the effective stem count for resistance given in the table is approximately five times the actual stem count very close to the bed. Similar adjustment may be needed for other unusually large-stemmed, branching, and/or woody vegetation.

However, in field situations, minor discontinuities are typically assumed, since it would be unusual for the cover to always be sufficiently uniform to allow designing for uniform cover conditions. Minor discontinuities have dimensions on the order of the vegetal stem length or flow depth, so that in the vicinity of these

discontinuities the entire hydraulic stress is borne by the soil surface (Equation 6-5b, with C_F=0). Major discontinuities completely negate the value of the protective vegetation, and the erosionally effective hydraulic stress is then set equal to the gross hydraulic stress (Equation 6-5a). Examples of minor discontinuities (Temple and Irwin, 2006) are narrow trails perpendicular to the flow direction with a width comparable to or less than the vegetal stem length or flow depth. Trails perpendicular to the flow direction should be considered major discontinuities if their width exceeds the vegetal stem length or flow depth. Trails parallel to the flow direction would be major discontinuities that not only expose the soil surface to erosion but allow concentration of flow in the exposed area, regardless of their size. Clearly, to receive any protective benefit from vegetation, major discontinuities cannot be allowed to occur. Other serious discontinuities to be avoided include trees, utility poles, buildings, and other structures within the flow surface.

When embankment conditions allow adequate rooting of the vegetal cover, the allowable hydraulic attack involves both the erosionally effective hydraulic stress and the duration of flow, and is given by (Hanson and Temple, 1994) (Equations 6-6 and 6-7):

$$\int \tau_e dt \leq 0.2(PI) \quad + 1 \qquad \text{Eq. 6-6}$$

and

$$\tau_o \leq 13.5 \text{ lb/ft}^2 \qquad \text{Eq. 6-7}$$

Where:

PI = plasticity index of the soil in which the cover is rooted

t = time in hours

In all cases, τ_o is restricted to values of 13.5 lb/ft^2 or less. This represents a stress level sufficient to cause direct instantaneous destruction of the vegetal cover through uprooting or tearing and removal of the leaves and stems. Considering a range of typical grass properties and embankment dam slopes ranging from 2:1 to 4:1, this puts a practical upper limit on the overtopping unit discharge of about 6 to 24 ft^3/s/ft. Equation 6-6, which incorporates soil properties and duration of flow, could indicate that even lower unit discharges are allowable for long duration events or on soils with little plasticity.

These relations are unit dependent, and apply to natural vegetative systems only, for a wide range of grass species. The erosionally effective hydraulic stress must be expressed in lb/ft^2, and the integral must be evaluated over the duration of the routed overtopping flow with time expressed in hours. When either the accumulated or instantaneous hydraulic attack exceeds the levels indicated by the equations, failure of the grass cover occurs.

For an example of the computations to be performed, consider an embankment dam having the following properties that is to be protected against overtopping using vegetative protection:

- Downstream slope, S = 0.5 (2:1)
- A grass mixture will be used with good uniform cover, C_F = 0.75, and with M = 200 stems/ft^2 (from Table 6-1)
- Grass will be maintained at a height, h=4 inches=0.33 feet
- Embankment soil is a lean clay (CL) with plasticity index (PI), PI=8, and with a soil grain roughness, n_s=0.0156

If the design overtopping depth is 1 foot, the unit discharge is estimated to be q=3.1*(1)$^{1.5}$=3.1 ft^3/s/ft (using the standard weir equation, with an assumed discharge coefficient of 3.1). Manning's "n" for the vegetated slope is determined to be 0.037 (using Equations 6-3 and 6-4), assuming that a wide-channel assumption applies, so VR = q. For a wide channel, the depth of flow down the slope can be determined directly using Manning's equation (Equation 6-2), and the result is D=0.26 ft, with a velocity, V=11.9 ft/s. The gross hydraulic stress is then calculated from Equation 6-5a, τ_o =8.26 lb/ft^2. Since this is less than 13.5 lb/ft^2, some duration of flow can be endured and the erosionally effective stress must be calculated. If no discontinuities are assumed, Equation 6-5b is applied using the cover factor, C_F=0.75. The erosionally effective stress is 0.37 lb/ft^2 and the allowable duration of overtopping before reaching the accumulated stress limit (Equation 6-6) is about 7.1 hours.

If minor discontinuities are assumed for this example (as recommended by Temple and Irwin, 2006), with C_F=0, the erosionally effective stress is four times greater at 1.47 lb/ft^2 and the allowable duration of overtopping is only 1.75 hours. If there are major discontinuities, the erosionally effective stress becomes equal to the gross stress and the allowable duration is only 0.3 hours. Clearly, the presence of discontinuities causes dramatic reductions in the amount of protection provided by vegetation. The other factors that are highly significant are the embankment slope and the soil plasticity. For example, a soil with a higher clay content and with PI=20 is able to endure almost twice the duration of overtopping. With a flatter slope of 4:1, the allowable duration is 60 percent more than the 2:1 slope. Note that in this example, an overtopping depth of more than 2 feet (q=9 ft^3/s/ft) will cause the gross stress to exceed the 13.5 lb/ft^2 threshold in Equation 6-7 and failure of the cover will be immediate.

6.2.2 *Reinforced Vegetative Protection*

The most complete source of independent information on natural turf reinforcement products and guidance for their design and use has come from the CIRIA research program in the United Kingdom (Hewlett et al., 1987). Many manufacturers of reinforcement products for vegetative systems have performed testing of their own particular products and provide design guidance for them, but the CIRIA work is the best source of unbiased comparative information. The CIRIA work was performed in the mid 1980s, and there have been no more recent independent studies. New turf reinforcement products have appeared on the market in recent years, but most can still be classified according to the scheme used for the CIRIA work and would probably perform similarly to the products tested in the 1980s.

The CIRIA design approach also relies on the calculation of flow depth and velocity using Manning's equation. For channel slopes less than 10 percent (or 10:1), the VR method (presented above) can be used to estimate Manning's n, while for steeper slopes the value of n is varied linearly from 0.030 to 0.020 for slopes from 10 to 33 percent (or from 10:1 to 3:1) and is taken to be constant at 0.020 for slopes steeper than 33 percent (or 3:1).

Erosion resistance of both plain grass and reinforced grass is evaluated in the CIRIA approach using velocity-duration curves (Figure 6-1). The velocity of the flow over the embankment can be computed using Manning's equation. The CIRIA work also considered precast concrete block protection systems, which are discussed in Chapter 4.

Please note that the graphs in Figure 6-2 should only be used for erosion resistance to unidirectional flow. Values are based on available experience and information at date of publication (1987). All reinforced grass values assume well-established, good grass cover. Other criteria (such as short-term protection, ease of installation and management, susceptibility to vandalism, etc.) must be considered in choice of reinforcement.

For plain grass, the velocity-duration curves depend upon the quality of the grass cover, which must be evaluated subjectively, since Hewlett et al. (1987) give no criteria for delineating between good, average, and poor cover. The reinforcement products provide resistance to increased flow velocity and/or flow duration as a result of their abilities to protect and stabilize surface soil particles and to improve the lateral continuity of the root system between individual grass plants, but it must be noted that Hewlett et al. (1987) state that reinforcement enhances erosion resistance compared to plain grass only if there is good grass cover.

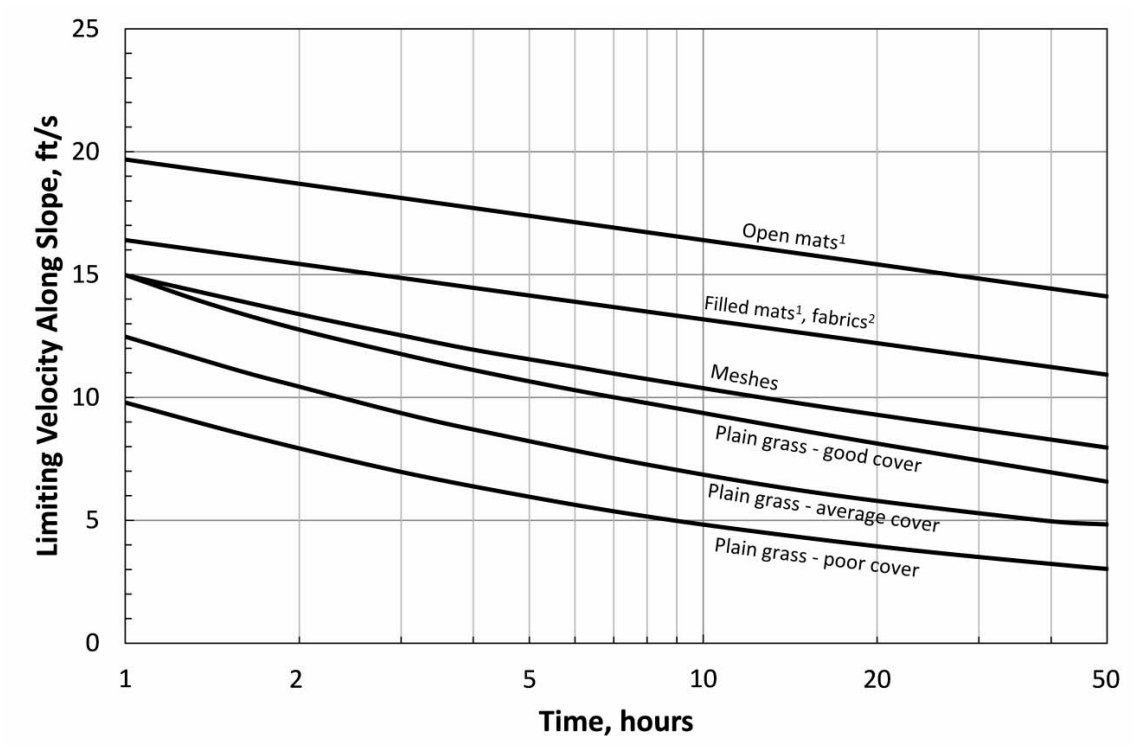

[1] Minimum nominal thickness 0.75 inch.
[2] Installed within 0.75 inch below soil surface, or in conjunction with a surface mesh.

Figure 6-2.—CIRIA velocity-duration curves for plain and reinforced grass (Hewlett et al. 1987, Courtesy of CIRIA, all rights reserved).

Two-dimensional fabrics and three-dimensional filled mats can provide all of these functions throughout and following the period of grass establishment, so they improve upon the performance of plain grass during both short- and long-duration flows. On the other hand, two-dimensional meshes help to restrain and improve the continuity between grass plants but provide no surface protection benefit, especially during cover establishment. As a result, they increase the duration of flow that can be tolerated, but do not increase the short-duration (1 hour) allowable velocity magnitude. Three-dimensional open mat products provide the greatest benefit once grass cover is established, as they do the best job of increasing continuity of the grass cover root system, but by themselves they provide no surface-protection benefit during the period of cover establishment. To obtain protection during cover establishment and achieve the best protection after establishment, systems combining products of different types (e.g., a three-dimensional open mat and a two-dimensional fabric) are needed. The fabric provides protection during establishment, and the three-dimensional open mat gives the optimum protection once grass is established.

6.2.3 *Synthetic Turf Systems*

The HydroTurf™ system (Figure 6-3) has been extensively tested at CSU (2013) and has shown good performance under a wide variety of flow conditions, including both sustained flows and wave overtopping. CSU reported stable performance on a silty sand subgrade at a 2:1 slope for steady-state overtopping depths up to 5 feet for a total of 12 hours, with a maximum flow velocity of 29 ft/s and a maximum shear stress of 8.8 lb/ft^2, with a Manning's "n" value of 0.020. Testing was performed in accordance with ASTM D7277 and analyzed in accordance with ASTM D7276; however, testing data are proprietary. Hydraulic jump testing was also performed in the steady-state flume at overtopping depths up to 5 feet with no system instability or underlying soil erosion.

Full-scale wave overtopping testing for levee landward-side slope protection and stability was performed by CSU (2013) on HydroTurf™ in accordance with a methodology developed for USACE. It was tested for 13 hours, with a cumulative water volume of 165,600 ft^3/ft, up to the limits of their wave overtopping simulator, with an average unit discharge of 4 ft^3/s/ft. This flow rate represents a 500-year generic hurricane (or 0.2 percent annual exceedance probability) in New Orleans, Louisiana. On both intact and intentionally damaged installations, the performance of HydroTurf™ was described as good on a highly-erodible silty sand subgrade.

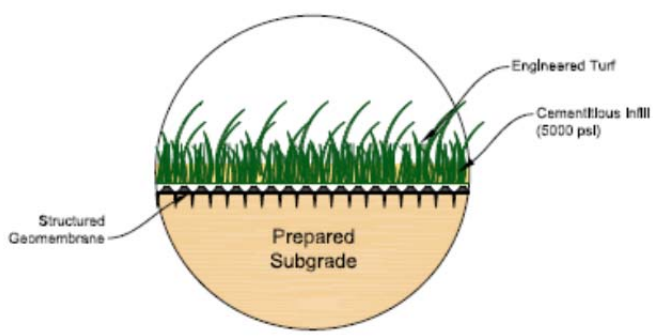

Figure 6-3.—Synthetic turf revetment system (Courtesy of Watershed Geosynthetics LLC, 2013, all rights reserved)

There is currently insufficient information to support further discussion of the design and analysis of synthetic turf systems. There is only one product in this category and it has not been tested to failure, so the mechanisms by which it will fail are unknown. The only design approach would be strictly empirical on the basis of limited laboratory tests and experience. The manufacturer of the HydroTurf™ system should be contacted for further information and guidance in the use of this product.

6.3 *Establishment of Vegetative Systems*

Creating a vegetative protection system is both a construction and agricultural endeavor. Careful planning and scheduling are needed to ensure that earthwork activities, reinforcement installation, and planting and grass establishment activities are all coordinated and completed on a timely basis to allow for good establishment of grass cover. This is especially important in more challenging growing climates where the opportunities for good grass growth are relatively short and confined to a specific time of year. The key to success of a vegetative protection system is its integrity, meaning that one must be diligent in addressing even small problems that can undermine the success of an entire project.

6.3.1 *Grass Species*

A wide range of grass species can be useful for erosion protection. The assistance of a local agronomist should be sought when selecting specific varieties for a given location, as there is variability in many aspects of initial and established growth both between species and between varieties of a single species. Grass species must be selected for compatibility with different geographic areas, climatic conditions, soil types, and soil-moisture conditions throughout the year. Hewlett et al. (1987), focusing on applications within the United Kingdom, list four important species: perennial ryegrass, fescues, bents, and meadow grasses. They give detailed information on the growth habits and maintenance needs of more than a dozen specific varieties. They observe that it is common to sow mixtures of different species, and suggest the mixtures shown in Table 6-2 for different applications.

Table 6-2.—Typical grass mixtures, in percent (Hewlett et al. 1987).

	Perennial Ryegrass	Creeping Red Fescue	Smooth-stalked Meadow Grass	Rough-stalked Meadow Grass	Creeping Bent
General purpose	40	30	20	0	10
Low maintenance – normal sites	0	70	20	0	10
Low maintenance – dry sites	0	75	25	0	0
Low maintenance – wet sites	0	40	0	30	30

Ahring and Davis in USDA *Agricultural Handbook* 667 (Temple et al., 1987) focus on applications in humid and subhumid areas of the United States and identify several tight-sod-forming grasses for use as vegetal channel linings. These include bermudagrass, bahiagrass, buffalograss, intermediate wheatgrass, Kentucky bluegrass, reed canarygrass, smooth bromegrass, vine mesquitegrass, and Western wheatgrass. They provide an extensive table that includes more than two dozen different grass species and gives characteristics relating to growth habit; root structure; site and soil adaptability; establishment rates from either seed, rhizome, or stolons; and height at maturity.

6.3.2 *Grass Establishment*

A variety of methods can be used to establish grass, including broadcast seeding, drilling, hydroseeding, sprigging, sodding, and mulch sodding. CIRIA Report 116 (Hewlett et al., 1987) and USDA *Agricultural Handbook* 667 (Temple et al., 1987) are good references for more detailed information about methods, seeding rates, seedbed preparation, supplemental irrigation, and weed control. Quick summaries of the methods for sowing are as follows:

- **Broadcast seeding** involves spreading seed over the area and then packing or dragging to provide seed coverage. Seed can be broadcast by hand, or by using tractor-mounted spreaders. This method usually requires about twice as much seed as drilling. Mulching after sowing seed should be considered to help prevent erosion before grass becomes established.

- **Drilling** uses seed efficiently, places seed more accurately, and increases the chance of establishment success. However, drilling requires a smooth seedbed and may be difficult on steep slopes. Drilling should be done across the slope to prevent erosion down the drill furrows, and mulching after drilling should be considered to help prevent erosion before grass becomes established.

- **Hydroseeding** is adaptable to steep slopes and adverse conditions, but uses large amounts of water to spray a mixture of seed, soil binder, plant nutrients, mulch, and water.

- **Sprigging, sodding, and mulch sodding** are common methods for establishing bermudagrass (Ahring and Davis in Temple et al., 1987). These methods all put living grass onto or into the ground, rather than seed.

A range of establishment aids are available for difficult situations or to increase the chance for establishment success. These include soil binding chemicals, dry fiber mats that contain mulch and seed together, and pre-grown mats of sod and geotextile.

6.4 *Turf Reinforcement Details*

Hewlett et al. (1987) provide considerable information on specifications and construction details that should be addressed for reinforced turf protection systems. These are subdivided into the areas of crest, side, and toe details, shear restraint, and miscellaneous details. Details of how the reinforcement is terminated and anchored at the crest, side, and toe are important to ensure that there are not localized high stresses and that flow cannot get under the reinforcement layer near these edges. These details also prevent vandalism and accidental damage to the reinforcement during future mowing and maintenance operations. Several alternative methods are detailed for each location. Toe protection details also include alternative methods for stabilizing a hydraulic jump at the bottom of the slope.

Shear restraint is usually provided in the form of shear pins or wooden pegs to temporarily hold the reinforcement in place until vegetation becomes established. Typical spacing of such pins is about 3 to 6 feet. In addition, joints between sections of turf reinforcement may require special construction details. Joints are generally overlapped and should be seamed where possible to improve lateral continuity of the reinforcement and prevent vandalism and maintenance damage. When seams are crossing the flow, the upstream geotextile should overlap the downstream piece.

The construction and installation of a synthetic turf surface using the HydroTurf™ Revetment System is more rapid than for a vegetative cover, as it does not require time for planting and establishment of grass. The synthetic turf has the look and feel of natural vegetation, but without the vegetative coverage requirements for performance. It has a projected functional life with proper maintenance of between 50 and 100 years, based on weathering tests performed in accordance with ASTM G147 and G7 (Watershed Geosynthetics, 2013) and depending upon site specific exposure and environmental conditions. Joints in the synthetic turf and underlying geomembrane layer of the HydroTurf™ system should be seamed as recommended by the manufacturer (i.e., heat welded and bonded). Intermediate pins or anchors are not necessary for installation of the HydroTurf™ system, but suitable anchor trenches should be provided at the crest, side, and toe as recommended by the manufacturer. The synthetic turf comes in various color combinations of green and brown.

6.5 *Vulnerabilities and Risk*

The natural overtopping protection systems described in this chapter are living systems that are critically dependent on the quality of the grass cover. A multitude of factors can affect the establishment of good initial grass cover, including soil properties, selection of grass species, seed germination rates, seedbed preparation, planting techniques, and climatic conditions, which all affect root penetration as

the grass cover develops. Once established, a good grass cover cannot be sustained without regular, effective maintenance, primarily mowing operations to keep the cover from becoming too tall and patchy in its growth habit, and to ward off the infiltration of woody plants that would produce non-uniform flow and concentrated stresses. Hewlett et al. (1987) address many of these issues in the context of reinforced turf protection, but most of the guidance is also applicable to plain grass.

Geotechnical factors can be very important in the design of a vegetative protection system. Hewlett et al. (1987) discuss possible failure modes that are somewhat independent of the vegetative protection, including:

- Deep slip failures of the soil mass beneath the vegetated slope following its operation
- Shallow surface slips when grass roots have failed to sufficiently penetrate the subsoil

They outline field investigation programs and testing that should be conducted to identify the potential for these problems, and offer design suggestions for dealing with slope stability, settlement, drainage, plasticity, and soil shear strength problems of the underlying embankment.

Long-term performance of reinforced turf systems is obviously affected by the degradation of reinforcement materials due to weathering effects such as ultraviolet (UV) exposure, wetting and drying, freeze-thaw cycling, and chemical reactions involving the materials and the surrounding soil and water. This is a research area that has not been fully explored, as many of these materials were only first developed in the last 20 to 30 years.

A good inspection program is essential to ensuring the long-term performance of any overtopping protection system. For grassed waterways, Hewlett et al. (1987) emphasize that visual inspections should address the following topics:

- Quality and uniformity of the grass cover
- Soil shrinkage which creates gaps at junctions between grassed waterways and rigid structures
- Differential settlement between rigid structures and adjacent grassed waterways
- Crest settlement or crest features that lead to flow concentration
- Exposed leading edges of reinforcement mats

- Damage to the turf reinforcement or grass caused by animals, mowing machinery, or vandalism

Regular maintenance of the grass itself and of the turf reinforcement system are required for good long-term performance. For the grass, regular mowing and periodic fertilization and weed control are needed to keep the grass cover healthy and uniform. Maintenance of the turf reinforcement primarily consists of repairing areas where the reinforcement becomes exposed or damaged, either due to flow events or other problems where:

- Reinforcement is simply exposed, it should be pinned down, covered with topsoil, and reseeded.

- Reinforcement and the associated turf layer have been separated from the subsoil but are still otherwise intact, the reinforcement should be pinned back down which will allow it to quickly reroot.

- Reinforcement has been torn or otherwise damaged, new sections of reinforcement may need to be spliced in or overlaid, anchored by pins, and then covered with top soil and reseeded.

Virginia Kendall Dam is a 20-foot-high embankment dam with a 2.5:1 downstream slope constructed in 1948 and located in the Cuyahoga Valley National Park in Ohio. It was overtopped by about a foot of water for about three hours in 2003, and sustained significant erosion damage to the downstream slope, as shown in Figure 6-4. Erosion began in three main locations at the:

(1) Concrete headwall of the spillway/outlet tunnel portal

(2) Left groin

(3) Downstream toe near the maximum section, along with a couple of spots on the slope where it started but did not progress very far before overtopping ended

The crest of the dam showed very little damage, except where headcutting had occurred. The dam would likely have failed if not for a concrete core wall at the crest and the short duration of overtopping. Before overtopping, the downstream slope had a well-established, thick, and uniform grass cover, mowed fairly short, with a generally smooth surface. The surface erosion initiated at points of flow disruption or discontinuities in the flow surface.

Figure 6-4.—Virginia Kendall Dam in Ohio after 3 hours of overtopping flow (Reclamation, 2003, courtesy of David Gillette).

Proper maintenance is also required of the synthetic turf revetment system. This includes regular inspections to evaluate performance and potentially damaged areas. Damage to synthetic turf and the ballast infill can be repaired or patched by removal and replacement of the damaged sections as follows:

(1) Saw cut through the cementitious infill and synthetic turf to the limits of damage

(2) Break up and remove the cementitious infill

(3) Remove the synthetic turf and the underlying structured geomembrane down to the subgrade

(4) Heat weld a new piece of geomembrane to the existing geomembrane.

(5) Heat weld a new piece of synthetic turf to the existing synthetic turf

(6) Infill the synthetic turf with cementitious materials and hydrate

If there are cracks or damage to the infill but not to the underlying synthetic turf and geomembrane, fill these cracks or damaged areas with cementitious infill materials and hydrate.

Since the synthetic turf revetment system is a manufactured product, it is appropriate to consult the manufacturer's recommendations for proper maintenance. Since synthetic turf with a cementitious infill has not yet been tested to failure, the mechanisms for which failure would occur are currently unknown. A synthetic turf revetment has not yet been used for an overtopping protection application.

Chapter 7. Flow-through Rockfill and Reinforced Rockfill

This chapter discusses the use, analysis, and design of flow-through rockfill and reinforced rockfill dams in the context of embankment dam overtopping protection. All of the following information comes from:

(1) Dams or cofferdams that are almost entirely composed of rockfill

(2) Rockfill shells of dams

(3) Massive rockfill placements

This is quite different from a veneer of riprap or unreinforced rockfill placed on the downstream face for overtopping protection of an embankment dam. This is also different from riprap used for slope protection for wave action or to protect channels from erosion, although rockfill may provide some of the same benefits. Both concrete-faced and central core rockfill dams have been designed to withstand overtopping and flow-through conditions. Some of these approaches may be applicable to existing dams with a downstream rockfill shell. The use of riprap as overtopping protection of an embankment dam is addressed in Chapter 8.

The term "embankment dam" is a general term for a dam constructed primarily of natural materials placed in the shape of an embankment. References to "rockfill" or "earthen" embankment dams are used to describe a specific type of embankment based on the composition of the majority of the fill materials within the dam. A "zoned" embankment dam contains a variety of natural fill materials. A zoned embankment dam, which includes a downstream rockfill shell composing the majority of the fill, is usually called a central core rockfill dam.

7.1 *Flow-Through Rockfill*

Designing a modification to an existing dam to safely pass flood flow through or over the dam is more difficult and uncertain than designing a new flow-through rockfill dam. New designs have the luxury of specifying the construction materials and placement procedures, which provides better knowledge of how the rockfill dam will be built and improves the understanding of the performance of the rockfill dam during overtopping or flow-through conditions (i.e., flows above or below the sloping rockfill surface). Excessive anisotropy between the horizontal lifts can be avoided in new rockfill placements by specifying a uniform, clean, and durable rockfill. Variable compactive effort, material

properties, and lift thicknesses present complications to understanding the performance of existing embankment and massive rockfill placements. The performance of existing rockfill dams (or massive rockfill placements over existing embankment dams) is much more difficult to predict due to the non-homogeneity of the existing structure. More control in placing rockfill for new dams should make these new dams' performance more predictable during overtopping or flow-through conditions.

Overtopping protection of embankment dams is challenging because of the steep slopes, erodible nature of the embankment fill, and the aggressive forces of the flood flow. Erosion protection materials need to remain in place against the forces of flowing water and be filter compatible with the soils that they are meant to protect. These are competing goals for overtopping protection, because it takes flat slopes and large rock to resist the forces of the overtopping flow, while it takes smaller particles to be filter compatible with the underlying embankment dam materials. For rockfill dams or zoned embankment dams with a significant downstream rockfill shell and an erosion-resistant crest, the filter compatibility issue is more easily addressed.

Cofferdams are commonly used during construction to retain floods that are more frequent than the return period of the design floods of the new embankment dam that they serve to protect. Cofferdams are often too low to divert flood water toward the spillway of the dam that they are protecting, so they usually cannot take advantage of the spillway discharge capacity. Some cofferdams store a significant quantity of water and may pose high risks to downstream populations. Both safety and economic considerations can lead to the need for designing flow-through rockfill cofferdams to survive overtopping rather than to incorporate other waterways to handle relatively rare floods.

Rockfill toe berms may be used to increase mass slope stability and increase the flow-through stability of an embankment dam during a flood event. Rockfill berms placed over the toe of a downstream rockfill shell can be cost effective for moderate overtopping flows when most of the overtopping flow occurs inside the rockfill shell. In this case, since the flow over the downstream face is minimal, mass sliding is the main design concern (Morán et al. 2011 and Morán 2013).

Reclamation's Pineview Dam in Utah presented a high risk of failure during a large seismic event. The zoned embankment dam was expected to slump below the reservoir surface, resulting in overtopping erosion, and its impervious core could crack significantly during an earthquake, resulting in piping erosion. The dam was modified to reduce the risk of both potential seismic failure modes. To handle the overtopping, the crest was raised and the impervious earthen core was extended well above the estimated amount of freeboard loss. To handle the potential cracking, very wide, multi-stage filters were placed against the raised section and downstream slope of the modified dam. A rockfill zone composed of large rocks was designed to resist the flow-through seepage forces of reservoir

water discharging through the cracks of the impervious core. The analysis approach of Leps (1973), described below, was applied for this design. Not only was the rockfill expected to remain stable under these flow conditions, it was also designed to be filter compatible with the downstream-most filter zone immediately adjacent to it. A similar approach would have been taken to reduce hydrologic risks of dam overtopping during a large flood event.

Rockfill can also be used to slow the erosion rate and delay dam failure, effectively reducing risk. Such an application could provide more time to allow for the safe evacuation of the downstream population and greatly reduce the consequences of dam failure.

7.2 *Reinforced Rockfill*

Reinforcement can be incorporated into rockfill to hold the surface rock particles in place during overtopping and flow-through conditions. Improvement to the mass slope stability is also a benefit, but is considered secondary. The reinforcement is a system composed of two essential components: a mesh and anchor bars. The mesh is located on the outside of the rockfill and is intended to hold the rock particles on the outer embankment slope in place, while the anchor bars are attached to the mesh and embedded deep within the rockfill to hold the mesh securely in place. Even though the anchor bars will add some tensile strength to the slope, this is not necessarily relied upon for global slope stability. However, the tensile strength of anchor bars is sometimes relied upon in the mass stability analysis to counter the effect of pore pressure increases caused by the flow over the dam.

The reinforcement of rockfill dams is usually designed empirically; that is, by copying designs of older dams performing successfully. Therefore, examples of two reinforced dams that have successfully withstood overtopping many times are included in this manual: Pit No. 7 Afterbay Dam and Des Arc Bayou Site No. 3.

Pit No. 7 Afterbay Dam in California (Figure 7-1) is an early design for a rockfill dam with reinforcement that has been used as the basis for the design of many subsequent reinforced rockfill dams. Leps (1973) described this low hazard dam, its flow conditions, and performance, as follows:

> The dam was designed to provide an afterbay for Pacific Gas & Electric's Pit No. 7 Powerhouse. It is subjected continuously to throughflow and frequently to overflow, with normal flows ranging from 2,000 to 6,650 ft^3/s and maximum flows up to an estimated 85,000 ft^3/s. As the dam was being built, a flow of 40,200 ft^3/s passed through the contractor's diversion channel and over part of the incomplete rockfill embankment.
>
> The dam is a 36-foot-high rockfill dam, about 555 feet long (with a concrete overflow spillway on the right abutment). . . it has an upstream slope of 2:1, a

downstream slope of 2¼:1, and a toe berm of reinforced rock about 20 feet wide. The downstream slope is reinforced with a surface grid of No. 7 and No. 8 steel bars, tied back at 3-foot vertical intervals with hooked, 37-foot-long, No. 7 bars. The pullout resistance is mobilized along the entire 37-foot-long anchor bars to hold the surface mesh in place. All rock within 4 feet of the surface is at least 12 inches in size and the rock in the toe-berm has a minimum size of 24 inches.

After a little over 3½ years of successful operation of the dam, there was some wear and dislocation of the bars, and about 1,400 yd^3 of rock had been washed away from the downstream face. In addition, there was a slight bulging of the lower part of the downstream slope and some sagging of the upper part, neither of which had exceeded 3 feet. The lost rock was replaced in 1968, and additional No. 8 bars were incorporated in the grid on the downstream face to inhibit further loss of rock.

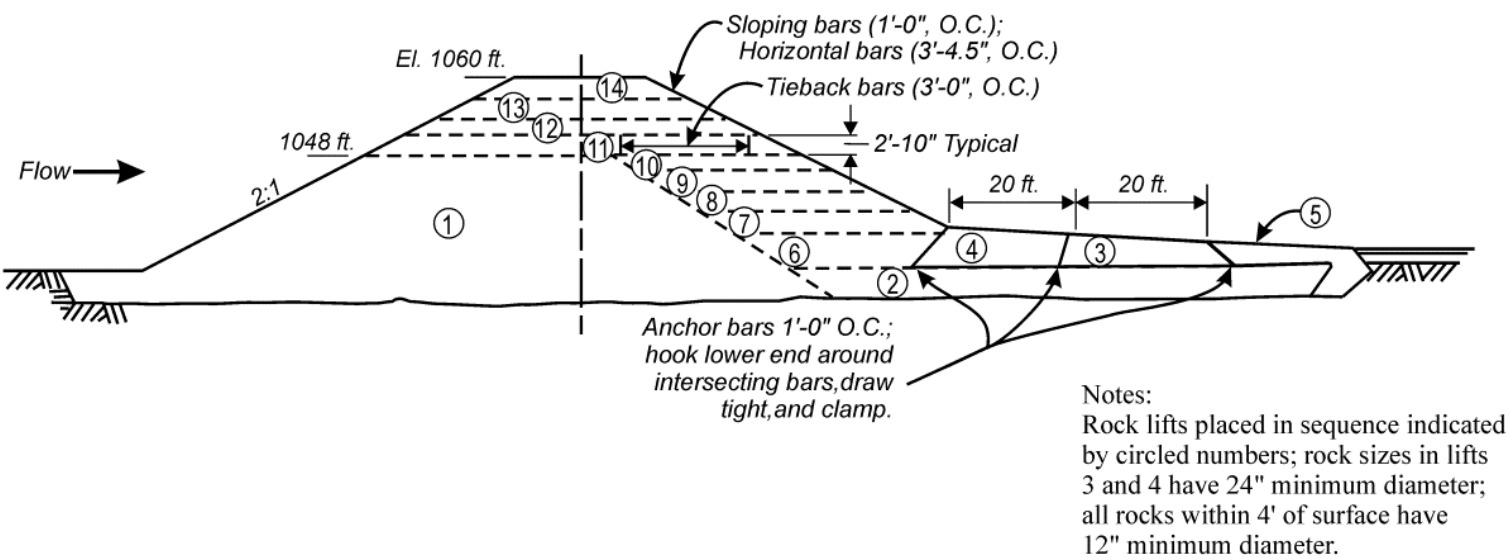

Figure 7-1.—Pit No. 7 Afterbay Dam in California (Reclamation).

The bulging and sagging mentioned in the paragraph above likely indicates mass instability. The anchor bars may have prevented a complete stability failure. The loss of 1,400 yd^3 of rock would have represented about 2 percent of the total estimated volume of the dam. With a crest length of 555 feet, normal flows would produce a unit discharge between 3.6 and 12 $ft^3/s/ft$, and maximum flows would produce a unit discharge of 153 $ft^3/s/ft$. Figure 7-2 provides a close-up view of the reinforced rockfill surface as it appeared in June 2007.

Figure 7-2.—Pit No. 7 Afterbay Dam, looking at downstream face, toward right abutment spillway. Dam crest has been capped with concrete. (Reclamation, 2007, courtesy of Jared Vauk).

Figures 7-3, 7-4, and 7-5 depict the reinforcement of a central core, zoned rockfill dam at Des Arc Bayou Site No. 3 in Arkansas that was constructed for the NRCS (formerly Soil Conservation Service)[6]. The design and construction, as described by Henry (1977) is of a dam with a height of 131 feet, an upstream slope of 2:1, a downstream slope of 1.8:1, and reinforcement on the downstream face to a height of 75 feet above the toe. The design for this dam is intended to allow water to pass through the dam when the reservoir level rises above the impervious core, then safely flow through Zones 2 and 3 of the downstream shell. The anchor lengths are uniform and relatively short compared to the height of the dam, indicating that the anchor bars are primarily there to hold the surface mesh and not to enhance global slope stability. Assuring internal filter compatibility between the embankment zones, especially between Zones 2 and 3 for this dam, is an important design requirement.

Stability of this dam is primarily provided by the Zone 4 rockfill. If the impervious core of this dam (or the crest of any rockfill dam) is overtopped, internal pore water pressures would rise and seepage forces would act within the rockfill to decrease stability. Such a decrease in stability can normally be countered in design by flattening the slopes. Flattening the downstream slope to increase stability is generally more efficient than increasing the length or amount of reinforcement, and more assured than changing the rockfill gradation. Neither the design analysis nor the performance history of Des Arc Bayou No. 3 Dam were reviewed for this manual.

No example of using reinforced rockfill to modify an existing embankment dam to withstand overtopping flows or flow-through conditions was found in the literature. While reinforcement is sometimes used for new rockfill dams and reinforced rockfill is used to stabilize concrete structures, it does not appear to have been used as slope protection for modification of existing earthfill embankment dams, nor does it appear that reinforcement has been added to zoned embankment dams with existing downstream shells considered to be rockfill.

[6] Note that all figures from Henry 1977 are reprinted with permission from Rockfill Dams Designed for Overtopping During Construction" by J. F. Henry. ASAE Paper No. 772536. Copyright 1977 American Society of Agriculture Engineers.

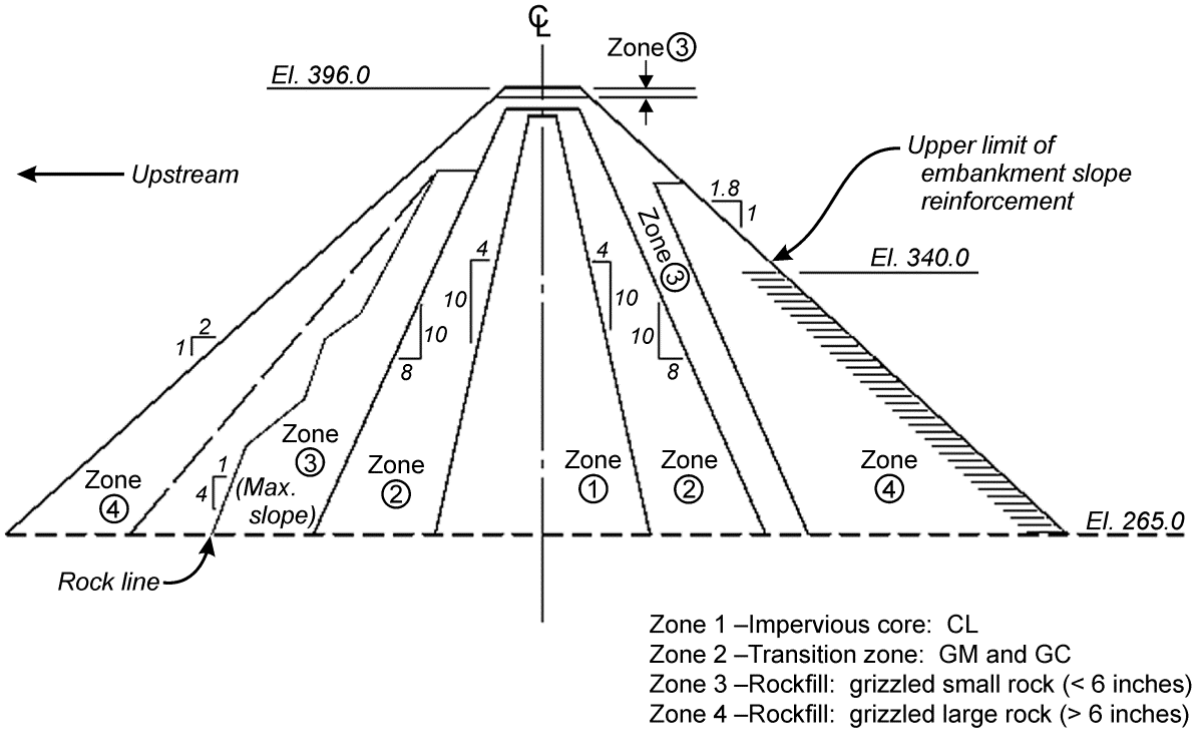

Figure 7-3.—Embankment section—Des Arc Bayou site No. 3 (Courtesy of Henry, 1977, all rights reserved).

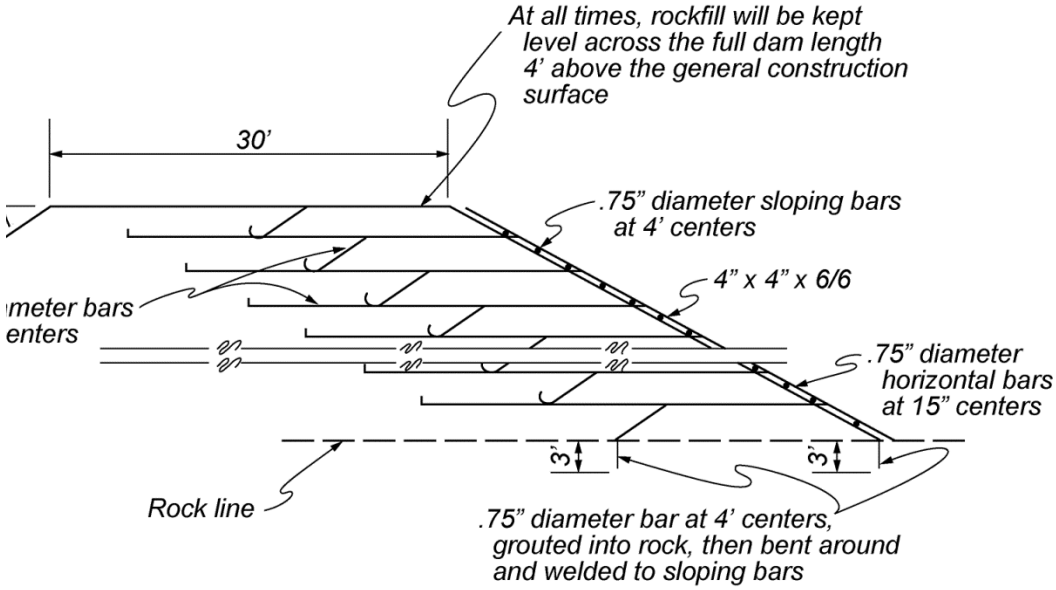

Figure 7-4.—Detail of downstream slope reinforcement at the toe and at midslope—Des Arc Bayou site No. 3 (Courtesy of Henry, 1977, all rights reserved).

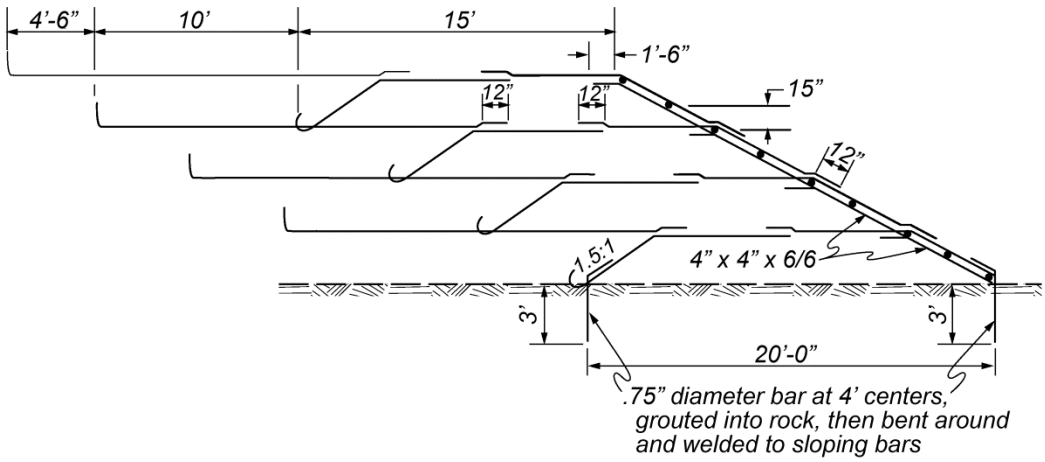

Figure 7-5.—Reinforcement detail for the downstream toe—Des Arc Bayou site No. 3 (Courtesy of Henry, 1977, all rights reserved)..

7.3 *Design and Analysis*

There are four essential parts to the analysis and design of a rockfill dam subject to overtopping:

(1) Flow-over

(2) Flow-through

(3) Mass stability

(4) Filter compatibility

In each part, the prediction of a load is compared to the resistive capability and expected performance of the dam. Flow through or over rock is turbulent, therefore, Darcy's law for laminar flow does not apply. Thus, loads to the dam imposed by the turbulent flow are difficult to predict.

One of the first two parts of the analysis usually controls the design of the size of the rockfill materials to resist the flow. The angle of the downstream slope of the outer rockfill zone is controlled by the mass slope stability which is discussed in the section 7.3.3. Knowing when design control shifts from flow-over to flow-through conditions is difficult, so designers are encouraged to design the rock size to accommodate both. Designs to accommodate flow over a dam are much more stringent than those to accommodate flow through a dam because velocities of water flowing over a rockfill dam can be orders of magnitude higher than flow-through velocities. Rockfills with greater than 30 percent smaller than 1-inch-diameter particles would behave more like an earthfill, and the flow through such material may be laminar. The slow flow-through rates for earthfills can be

estimated by conventional permeability testing and geotechnical analysis and would be found to be practically zero when compared to overflow rates. For flow-through estimates to control a rockfill design, the rockfill (or significant portions of lifts within the embankment) would likely have much less than 30 percent of its material sizes smaller than 1-inch. Flood routings for flow-through rockfill dams may need to account for the quantities of water that pass through the embankment. For earthfill dams, flow-over conditions will control the design, which is addressed in Chapter 8.

7.3.1 *Flow-Through Analysis*

Because flow through a rockfill is turbulent and not linear with gradient, estimating the flow rate is quite uncertain. Equations have been presented by Leps (1973) that are still used to estimate critical parameters of turbulent flow through a clean rockfill. Parameters such as the average velocity of water in the voids, height of seepage exit on the downstream slope, and unit flow rate are solved iteratively beginning with assumed values of rockfill permeability, hydraulic gradient, hydraulic radius of the rockfill voids[7], void ratio, rock size, and slope of the downstream face. These equations are somewhat simplified because they do not take into account the non-homogeneous and anisotropic nature of a rockfill placement.

Rockfill is placed in lifts which are not expected to have the same gradation and density at all levels, even within one lift. Rock materials tend to break down the closer they are to the compaction machinery. Modern vibratory compactive effort produces a layering of the fill, particularly at the top of each lift where the compaction results in a finer grained layer. For this reason, vertical permeability is normally less than horizontal permeability within a rockfill dam, often much less. Some rockfill dams, and particularly the rockfill shells of zoned embankments dams, have layers or entire zones with greater than 30 percent of the particles smaller than 1-inch, so they would not behave like a clean rockfill as was assumed by Leps. The permeability of a rockfill is very site-specific, likely to be nonhomogeneous and anisotropic, and difficult to estimate. In addition, permeability can be affected by plugging of the water entrance with water-borne debris or wind-blown soil deposition. As stated earlier, there is a difference between evaluating existing rockfill and designing new rockfill.

Physical, scaled down model tests have been performed to better understand pore water pressures and permeability within a rockfill for design purposes (Toledo, 1998). Flow and tailwater conditions can be varied, and mass stability can be checked. Nonconventional tests have been used to estimate resistance formula of seepage flow. For example, *in-situ* rockfill sample testing or large scale

[7] Defined by Leps (1973) for a given volume of rockfill particles as the volume of voids divided by the total surface area of the rockfill particles, or the void ratio divided by the surface area per unit volume of solids.

permeameters can be used for this purpose (Zou, et. al., 2013; Siddiqua, et. al. 2011; and Morán, 2013).

7.3.2 Allowable Flow Through Rockfill

After the flow rate through an unreinforced rockfill is estimated, it can be compared to the maximum permissible flow rate based on the 50-percent particle size (D_{50}), relative density, and downstream slope of the rockfill, as shown in Table 7-1 from Leps (1973). The values shown represent maximum unit discharges without particle movement. For example, a rockfill dam with a downstream slope of 1.5:1 and a dominant rock size (D_{50}) of 24 inches can handle a unit discharge between 4 and 10 $ft^3/s/ft$ depending upon the relative density of the rockfill.

Table 7-1..—Maximum permissible flow rates through a downstream rockfill (Leps, 1973)

Downstream Slope (H:V)	D_{50}, Dominant size of rock in slope (inches)	Permissible flow through rockfill ($ft^3/s/ft$)	
		Loose*	Dense*
1.5:1	24	4	10
1.5:1	48	15	40
1.5:1	60	20	55
5:1	12	5	15
5:1	24	20	55
5:1	36	35	95
5:1	48	55	150
5:1	60	75	200
10:1	12	15	40
10:1	24	45	120
10:1	36	80	220
10:1	48	120	330
10:1	60	170	470

*Dumped rockfill, poorly graded with a relative density less than 50 percent.
**Compacted rockfill (by vibratory compactor) with a relative density near 100 percent.

7.3.3 Mass Slope Stability

Mass or global slope stability is part of any analysis and design of an embankment dam. A slope stability analysis of deep-seated failure surfaces is necessary to assure stability. Seepage forces need to be included in static slope stability analysis to accurately compute the stability of a rockfill embankment subject to flow-through conditions. Similarly, water flowing over a rockfill should be added to a slope stability model to more accurately compute its stability. Most computer stability programs are set up to solve these types of problems, but the challenge to the analyst is to accurately estimate the seepage forces for turbulent flow. Since seepage forces can be a function of the size of the rockfill particles, flow nets from a laminar seepage analysis are not applicable.

Research at the Technical University of Madrid in Spain (Toledo, 1998) has been published addressing the critical issue of mass slope stability of rockfill dams. Many physical tests were performed in this research on rockfill dams and toe buttresses. Simplified formulas are presented; however, caution is advised in their use—considering the complicated nature of the problem. Conservatism can be incorporated with sufficient safety factors.

7.3.4 Material Compatibility

Filter compatibility is required between the outer layers of a rockfill zone, e.g., the armor protection and the inner zones of an embankment dam. If the armor protection of the outer layers is composed of large rock, the layer immediately upstream or below must be sized so that it cannot move through the large rock of the outer layer. Filter compatibility must be satisfied by all materials in the embankment. This will require multiple layers of gradually smaller particles from the outside, inward to the center core of the dam. Since the gradation difference between the slope protection and the inner core of a dam is likely to be very large, the layers may become numerous and the overall thickness could be substantial. To achieve this material compatibility, common standards should be applied from filter or riprap design such as Reclamation's Design Standards for Embankment Dams, No. 13, Chapter 5 for *Protective Filters* (2011) and Chapter 7 for *Riprap Slope Protection* (2013).

7.3.5 Reinforcement Design

With reinforced rockfill, individual rocks are kept in place with a mesh of steel reinforcement on the surface. This mesh usually consists of steel reinforcement bars tied together. Chain link fencing and welded wire have been used in some cases, but experience with these is poor due to their weak strength and vulnerability to debris impacts. The mesh is sized relative to the smallest rock that could be dislodged from the downstream face of the embankment slope. The mesh should have sufficient strength to resist the tractive and seepage forces acting on the surface particles. If overtopping occurs, the mesh needs to also withstand the impact forces of debris carried by the overflow. Heavy reinforcing steel (No. 7 bars) is relatively resistant to damage from overtopping debris. To best reduce the potential for debris to catch on a downstream mesh of steel reinforcement during overtopping, horizontal bars should be placed against the fill and the vertical bars should be attached above the horizontal steel. Large rockfill reduces the cost of reinforcement by allowing more widely-spaced bars. The horizontal bars should be connected to the vertical bars where they cross with clamps or other devices to maintain the shape of the mesh.

The reinforcing mesh is affixed to the embankment slope with anchor bars. Unless the anchor bars are designed for a dual purpose, it is advised to conservatively ignore the tensile strength effects of the anchor bars in the slope stability analysis of a reinforced rockfill. However, if the anchor bars are to be used to provide reinforcement to increase global slope stability, the bars are

embedded into the embankment beyond the critical shear surface to a depth sufficient to transfer the design loads in the bars to the surrounding rockfill and eliminate the possibility of premature pullout. Mass slope stability analysis should also be performed to determine the required depth of embedment.

Alternatives to embed the anchors into the rockfill include crank-shaped anchors, anchors fixed to grouted dowels in the fill, and inclined anchors (Brown and Pells, 1983). Figure 7-6 depicts alternatives for anchorage at the ends of typical reinforcing bars, although reinforcement can take many other shapes. Vertical spacing of the tie-back bars is not an exact science. Spacing should be close enough to prevent the critical shear surfaces from circumventing the reinforcement by exiting between the horizontal layers of reinforcement. The reinforcement system is connected to the foundation and abutments with rock bolts or another solid means to keep it in place along the edges where the erosive forces may be the most aggressive.

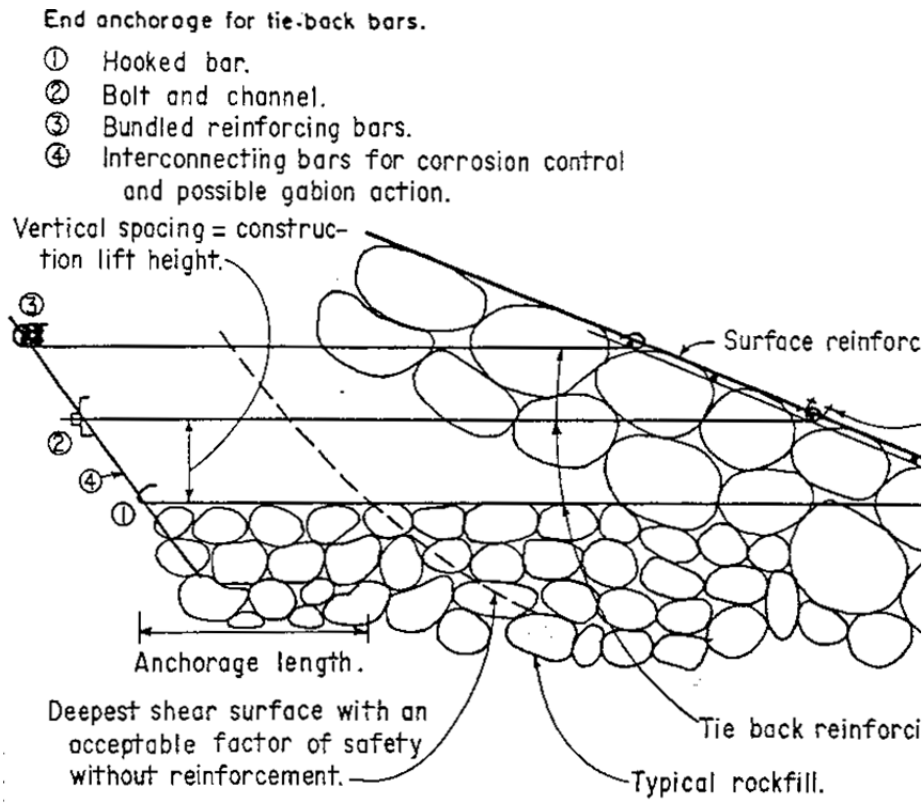

Figure 7-6.—Schematic detail of tie-back steel reinforcing bars with end-anchorage alternatives (Courtesy of Brown et al., 1983, all rights reserved).

To resist through flow, reinforcement should extend well above the height of the predicted seepage exit elevation. To resist flow over an embankment, the reinforcement should extend over the entire downstream face, abutment to abutment, unless the embankment has been shaped to direct overtopping flows through a limited area. Designs should also assure crest stability during overtopping. Rockfill would be largest and reinforcement would be heaviest at the downstream toe of an embankment dam subject to overtopping.

As noted previously, the methodology for the design of rockfill reinforcement is rather empirical. Designs are often copied from previous successful dams performing similar functions. One valuable source of information on past designs includes 50 reinforced rockfill dams and cofferdams in the report prepared by Australian National Committee on Large Dams (ANCOLD) (1982). Of these 50 mostly Australian dams, 18 were overtopped by flood flows and 5 of these failed. As described previously, Pit No. 7 Afterbay Dam and Des Arc Bayou Site No. 3 have successfully withstood overtopping many times.

Corrosion shortens the life of steel reinforcement and must be considered for design. Carbonaceous rockfill materials should be avoided due to their galvanic effect and because of their high electrical conductivity. If reinforcement is buried within saturated soils, corrosion would be influenced by the quality and pH of the water, soluble salt content of the overlying soil, and aeration. Conventional practices to fight against corrosion include:

- Substitution of nonmetals for metal reinforcement
- Use of corrosion-resistant metal alloys
- Use of protective coatings
- Installation of corrosion monitoring systems
- Cathodic protection

For steel, the first line of defense against corrosion is the use of protective coatings such as zinc or fusion-bonded epoxy. Zinc, in the form of galvanized coatings, has a limited life since it sacrifices itself to protect the steel. In addition, zinc is conductive and would require more electrical energy if cathodic protection were ever added as part of the protection scheme. Epoxy would be expected to have discontinuities that would still leave some small areas of steel exposed to corrosion. A corrosion monitoring system can be implemented which could tell when cathodic protection might be necessary if all other types of protection do not work.

7.4 Vulnerabilities and Risk

There are uncertainties in estimating the forces of flowing water through or over a rockfill embankment. Additionally, there are uncertainties in the ability of rockfill, especially unreinforced rockfill, to resist these forces. Estimating the permeability and other important parameters associated with flow over or through a rockfill is difficult. Rockfill placement results in an anisotropic and nonhomogeneous structure. If reinforced rockfill is to be used for overtopping protection of an existing dam, it should be rather massive. However, there is too great a chance of dam failure to consider such a system in the design of a new or modified high or significant hazard earthfill embankment dam.

Special attention is required around the perimeter of any downstream slope protection system. Flow over or through a rockfill dam would concentrate in the groins along the downstream slope (unless shaped to prevent that) and more robust scour protection is likely necessary there. Any discontinuities or flow concentrations on the crest or slope would be a location of more turbulence and excessive erosion attack that could over-tax any protection system. Camber that is constructed into a new dam is an example of a design feature that would concentrate flow over a dam at the ends of the crest. Unless shaping to redirect overtopping flow is provided, flow concentrations can be especially problematic around structures or depressions, at the ends of camber, in the groins of dams, or at the toe of an embankment. These are areas where overtopping protection needs to be the strongest. The downstream toe would be the area where the particle size of a rockfill protection system would need to be the largest and the reinforcement (if provided) would need to be the heaviest.

Attention to protecting an embankment dam should also include the stability of the crest. Even if a downstream slope can be well armored, if the crest erodes, all could still be lost.

Reinforcement can degrade with use and over time. Surface meshes can be damaged by rocks and logs carried by overtopping flows. Chemical attack can corrode steel reinforcement. Bulges and deformations can occur in reinforced rockfill slopes as a result of the migration of rock particles beneath the mesh as noted by Leps (1973) and Simons et al. (1984). Figure 7-7, prepared for gabion mattresses which are described in Chapter 5, depicts how this process could occur for reinforced rockfill applications. Movement of rocks beneath the reinforcement could be caused by rockfill that is placed too loosely or improperly graded, mesh that is not well anchored, or slope instability.

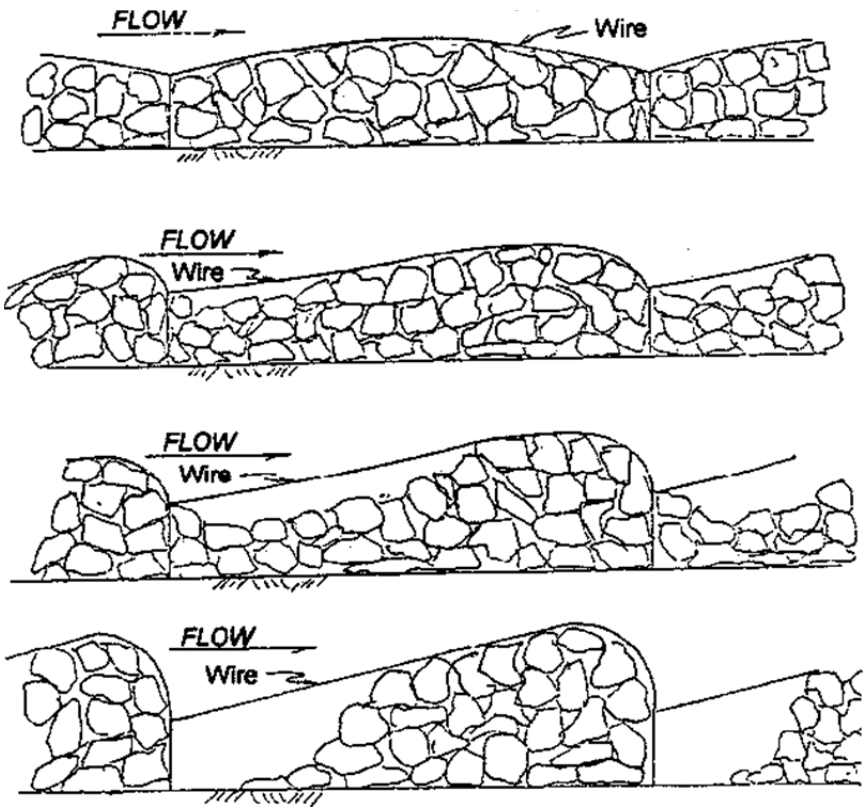

Figure 7-7.—Local pattern of rock movement within a mattress (Simmons et al., 1984).

One case history of flow-through rockfill or reinforced rockfill dams is provided in the Appendix (Googong Dam). Two examples of reinforced rockfill dams are included in this chapter.

Chapter 8. Riprap

A riprap layer on the downstream slope of an embankment dam can generally provide some protection against the initiation of embankment erosion during overtopping flow. Riprap is generally composed of high quality quarried rock (often granite, volcanics, or limestone), or occasionally concrete rubble and is dumped or manually placed over a suitable bedding layer. With riprap in place, the overtopping flow is conveyed both through and above the riprap layer, thus preventing erosion by reducing flow velocities and shear stresses along the surface of the erodible embankment materials. Riprap is generally considered to be lower-priced than many other erosion protection alternatives when suitable borrow sources are available nearby.

This chapter provides a summary of research and laboratory testing of riprap in overtopping flow, some design guidance, and case study examples. The guidance is applicable to the design of new overtopping protection systems, rather than for the evaluation of existing riprap placements, since it is difficult to accurately assess the in-place gradation and placement uniformity of existing riprap that may not have been originally intended to provide overtopping protection. Overtopping performance is very sensitive to the permeability of a riprap placement, primarily governed by the D_{10} size within the riprap layer, which is very difficult to evaluate for an existing installation. The performance of flow-through rockfill and reinforced rockfill is discussed in Chapter 7.

8.1 *Historical Perspective*

Riprap has long been used for erosion protection on a wide variety of hydraulic structures, including embankment dams, canal drops, river training structures, and bridge piers. For embankment dams, riprap has been used primarily to prevent rill erosion of slopes due to surface runoff and to prevent wave erosion at the interface between embankment slopes and standing water (i.e., upstream reservoir or downstream tailwater) (USACE, 2004). Riprap has always been an attractive option for erosion protection because it is widely available and conceptually simple in function, requiring nonspecialized preparation and installation, and minimal long-term maintenance to achieve apparent effectiveness. However, experience and research have shown that riprap layer and bedding design details and construction quality control can significantly affect performance for protection against overtopping flow. Riprap has been widely used in arid areas and on steeper embankment slopes (up to about 1.5:1, or the angle of repose) where vegetative protection is difficult to establish and maintain.

Although it may not have been originally intended for the purpose, riprap is often expected to provide some overtopping protection for existing dams of all sizes during small overtopping events of short duration (Frizell et al., 1998). In recent

years, riprap has been specified for this purpose on small, low hazard dams, and has been successfully used on low drop structures with flat slopes in low hazard situations. The use of riprap for high flow rates and steep slopes generally becomes cost-prohibitive due to the large size of rock required.

Applications of riprap protection specifically designed for overtopping flows on new significant or high hazard dams have thus far been very limited. One example, however, is for the Khasab embankment dams on the Musandam Peninsula of Oman (Taylor, 1991). Three high hazard embankment dams were designed with flattened 4:1 downstream slopes to be armored by large (20- to 66-inch) riprap over bedding, for protection against overtopping by large floods up to the PMF. The design was based on theoretical calculations and 1:50 scale model tests, and included a maximum design unit discharge of nearly 55 $ft^3/s/ft$ for the main dam embankment. The quarried limestone riprap was to be dumped and reworked in place to produce the required packing or density. During construction, there were some difficulties obtaining sufficient quantities of large size rock, and it was challenging to achieve placement uniformity and packing specifications. These are typical of large riprap construction efforts and are not believed to have impacted the quality of the final constructed project.

An example of the addition of riprap protection to an existing high hazard dam is Upper Stoneville Reservoir Dam in Massachusetts (Wooten and Wood, 2002). This 20-foot- high, 400-foot-long embankment received riprap protection designed to resist a 50 percent PMF flow of 14 $ft^3/s/ft$. The downstream slope of the embankment was flattened from 2:1 to 4:1 to reduce the required stone size. The riprap blanket was designed using the procedures in Frizell et al. (1998) and was composed of rock with D_{50}=1.5 feet dumped in a 6-foot-thick layer ($4*D_{50}$ thick) over a bedding layer of non-woven geotextile and 6 inches of 1.5-inch crushed stone (Figure 8-1). The dam has not experienced overtopping flow since the modifications were completed.

A somewhat non-typical application of riprap for overtopping flow protection arises in the decommissioning of watershed flood control dams. The NRCS has undertaken a number of these projects in which the reservoir contains significant accumulations of sediment. To avoid releasing the sediment downstream, the dam is only partially breached by excavating a spillway channel through the embankment just down to the elevation of the stored sediment. Flow is then conveyed through a riprap-lined rock chute that protects the breached section and the remaining embankment from erosion.

Figure 8-1.— Dumped riprap placement on 6-inch bedding layer for Upper Stoneville Reservoir Dam, Massachusetts (Wooten and Wood, 2002, Courtesy of ASDSO and GEI Consultants, all rights reserved).

The design basis for decommissioning of watershed flood control dams is the testing by Robinson et al. (1998). One example of this application is the rock chute spillway constructed on Little Washita Site 13 in Oklahoma, shown in Figure 8-2. This dam was decommissioned due to a troublesome karst foundation condition. The rock chute was designed to convey a routed 25-year flood discharge of 1,740 ft^3/s within the chute. Larger discharges will be spread over a 400-foot wide section of the remnant embankment. The drop height of the chute is 12 feet, and the channel slope is 4.75 percent. The chute is nominally 50 feet wide with 3:1 side slopes, and includes a 10-foot-wide riffle-and-pool channel on the left side for very low flows. The riprap layer is 3 feet thick and the rock has a maximum size of 36 inches and D_{50} of 24 inches. Riprap is placed onto a non-woven geotextile overlaying a 6-inch deep sand layer, and the chute is anchored by sheet pile cutoffs at the upstream and downstream ends. Three such projects have recently been constructed in Oklahoma, and NRCS has used an additional seven rock chutes of similar configuration for grade control in the Sugar Creek watershed in Caddo County, Oklahoma.

Figure 8-2.—Rock chute spillway on Little Washita Site 13 in Grady County, Oklahoma. This chute was installed in 2010 to convey flows over the remnants of the decommissioned dam (USDA-NRCS, Courtesy of Chris Stoner).

8.2 *Design and Analysis*

There is much uncertainty in the design and analysis of riprap for overtopping protection, and conservative approaches are recommended. The degree of overtopping protection provided by riprap has been the subject of several research efforts in recent years. The primary area of interest in these studies has been determination of the allowable flow rate through and over a specified rock layer or alternately the size and depth of rock needed to protect against a specified flow rate. The secondary area of interest is the energy dissipation produced by the rock, often expressed in terms of the effective hydraulic roughness of the surface. Knowledge of the potential degree of energy dissipation aids in determining the extent of riprap needed at the toe of a slope, or facilitates the design or analysis of other energy dissipation features near the toe.

8.2.1 *Basis for Design Guidance*

Flow hydraulics on steep embankment slopes cannot be analyzed with standard flow equations. Uniform flow and tractive shear equations do not apply to shallow flow over large roughness elements, highly aerated flow, nor to chute and pool flow—all of which can occur during overtopping. Riprap design criteria for overtopping protection of embankment dams should prevent stone movement and

ensure the riprap layer does not fail. Empirically-derived design criteria offer the best approach for design (Frizell et al., 1990). Studies of riprap design include:

- Riprap design to resist overtopping flow is dependent upon the material properties (median size, shape, gradation, porosity, and unit weight), the hydraulic gradient or embankment slope, and the unit discharge (ASCE, 1994).

- Robinson et al. (1998) and Peirson and Cameron (2006) provide two valuable summaries of the historical investigations that have led to present-day design guidance for riprap subjected to overtopping flow.

- Isbash (1936) conducted some of the earliest studies on the stability of large rock in flowing water, considering the placement of large rock into flowing water as a means for constructing rockfill dams.

- Olivier (1967) studied through-flow and overflow of rockfill dams and developed rock stability equations calibrated with small-scale data from flow over and through gravel on slopes from 8 to 45 percent. Olivier defined threshold flow where incipient stone movement occurs, and collapse flow where stone failure occurs. This work did not incorporate the effects of aeration which are significant with larger-size rock and typical embankment slopes.

- Stephenson (1979b) modified Olivier's work slightly by incorporating a porosity term.

- Hartung and Scheuerlein (1970) recognized the importance of aeration at larger scales and developed stability equations based on the work of Isbash (1936) and their own tests of aerated flow over fixed rocks, but they did not test riprap placements to the point of failure.

- Knauss (1979) combined the aerated flow concepts of Hartung and Scheuerlein (1970) with the work of Olivier (1967) and developed a simplified set of design equations. Knauss developed a rock stability function based on unit discharge, slope, rock packing, and air concentration for sizing riprap, and determined that flow aeration increases the critical velocity for which riprap on a steep slope remains stable.

- A design procedure focused on applications for relatively flat slopes (i.e., flatter than typical embankment dam slopes) was provided in the USACE's *Hydraulic Design of Flood Control Channels* (EM 1110-02-1601) (USACE, 1994).

Several investigators have studied the effect of material properties other than stone size. Anderson et al. (1970) developed design methods for riprap-lined drainage channels using rounded stones on relatively flat slopes. Later work (Abt

et al. 1987; Abt and Johnson 1991) showed that rounded stones could withstand a unit discharge about 40 percent lower than angular stones, leading most subsequent investigators to focus only on angular riprap. Anderson et al. (1970) studied various riprap gradations and found that uniformly-sized (or poorly-graded) riprap remained stable at higher flow rates than non-uniform (or well-graded) riprap , but that non-uniform riprap provided better protection of the filter and bedding materials located beneath the riprap layer. Wittler and Abt (1990) further quantified the effects of stone gradation and confirmed that uniform (or poorly-graded) materials withstood higher flow rates than non-uniform (or well-graded) rock with the same D_{50}. They also found that uniform materials (D_{60}/D_{10} = 1.1) failed more suddenly than non-uniform materials (D_{60}/D_{10} = 2.2) when the riprap layer became unstable. Riprap gradations with a wide range of sizes typically experience problems with size segregation during placement. So for best performance under overtopping flow, a rock of relatively uniform size is generally desired, while gap-graded materials and mixes with a very large range of sizes (D_{85}/D_{15}>7) are generally avoided.

Research has tended to consider steeper slopes and larger stone sizes over time as the upper limits of riprap applicability have been pushed and as interest in the protection of embankment dams against overtopping flows has increased. Maynord (1988) performed overtopping tests at slopes of 2 percent or less. Abt and Johnson (1991) ran tests at slopes of 1 to 20 percent with median rock sizes up to 6.5 inches and unit discharges up to about 5 $ft^3/s/ft$. Robinson et al. (1998) tested and developed design procedures for rock chutes constructed on slopes of 2 to 40 percent (2.5:1) using rock as large as 11 inches median diameter and unit discharges up to 17.5 $ft^3/s/ft$. Both Abt and Johnson (1991) and Robinson et al. (1998) found the allowable unit discharge to be a function of the embankment slope and the median rock size. They probably did not identify porosity as a parameter because by this time most investigators were concentrating on angular, uniformly-sized rock mixes, and thus porosities of the rock mix were relatively constant at around 0.45. Robinson et al. (1998) found that riprap sized for stability on the slope would also be stable in the exit area of the chutes he studied, even with minimal tailwater, suggesting that for an embankment dam application no special treatment of the toe of the slope was needed other than continuing the riprap protection beyond the end of any expected hydraulic jump.

Chang (1998) found the Robinson et al. equation to be accurate at the steep end of its range (40 percent slope, or 2.5:1) but overly conservative at low slopes (less than 10 percent). Chang resolved this with a more complex equation using the embankment slope and angle of internal friction (angle of repose) of the rock material. Chang also provided a good discussion of the typical two-stage failure process observed for riprap on steep slopes:

(1) The threshold or motion stage, where there is initiation of stone movement leading to consolidation and strengthening of the armor layer

(2) The collapse or failure stage in which the stones are already interlocked and the eventual movement of one or a few stones leads to total collapse of the protective layer

The difference between the threshold discharge and the failure discharge tends to increase with stone angularity and slope (Olivier 1967 and Abt and Johnson 1991).

Mishra (1998) and Frizell et al. (1998) reported on overtopping tests with median rock sizes from 10.5 to 26 inches on a 2:1 slope (50 percent) at unit discharges up to 10 $ft^3/s/ft$. At such steep slopes, flow takes place primarily through the rock rather than over the rock, and a variety of multiphase flows can occur as noted by Peirson and Cameron (2006) including aerated water, water through rock, and potentially air and water through rock. Flow conditions were observed through clear acrylic windows in the side of the test flume. Flow depths were measured with piezometers embedded in the rock layer, and salt injectors and conductivity probes were used to measure interstitial velocities. Failures of the riprap slope occurred when measured flow depths were still below the top of the rock layer. (Most recent investigators have been consistent in defining riprap failure to have occurred when the bedding material is exposed.)

Highly aerated flow was also observed above the rock surface, but this aerated flow did not register at the piezometers and was only a small fraction of the total flow. Results of the tests were used to develop a design procedure that could determine the appropriate rock size and layer thickness to safely protect against a given unit discharge of overtopping flow. The relations developed include the coefficient of uniformity, $C_u=D_{60}/D_{10}$, and the porosity of the rock mix, recognizing that in large-size rock mixes, porosity can vary significantly depending on placement methods and other factors. The procedure allows for riprap layer thicknesses of 2 to 4 times D_{50}, the former being the minimum necessary to protect the bedding material and the latter being a practical upper limit for effective placement. At slopes steeper than 4:1, the procedure requires the entire computed flow to be conveyed interstitially. For flatter slopes, a portion of the flow can be conveyed above the rock surface, with a check that the surface flow will not exceed the critical shear stress limit for the rock. The testing also explored the question of toe stability, with a variety of measures employed in attempts to produce a test in which failure occurred at the toe of the slope, but no toe failure ever occurred. Neither this work nor that of Robinson et al. (1998) looked at the issue of increased protection for groin areas where embankment slopes meet converging abutments. The increased unit discharge in these areas may require larger stone sizes and an increased riprap layer thickness.

Two recent efforts have been made to integrate the data and design procedures developed for the different slope ranges discussed above with the objective of applying them to embankment overtopping protection applications. Peirson and Cameron (2006) revisited the stability equations of Hartung and Scheuerlein (1970), Olivier (1967), and Stephenson (1979b) and considered their effectiveness

using the test data obtained by Abt et al. (1987), Abt et al. (1988), Abt and Johnson (1991), and Robinson et al. (1998). They derived a new equation based in part on Olivier (1967) and Stephenson (1979b) and an analysis of incipient motion of individual stones, but found it to be much too conservative for steep slopes. As an alternative, they proposed a modified form of the Hartung and Scheuerlein (1970) equation, incorporating a new rock slope stability term borrowed from the incipient motion-based equation. They tested this equation using just three data points from Robinson et al. (1998) (8, 22, and 40 percent slopes) and showed that for these three data points the new relation provided a conservative design method that reproduced the essential dependence of riprap performance on slopes, up to slopes of 40 percent. However, they did not test their relation with or cite the work of Mishra (1998) and Frizell et al. (1998) at a 50 percent slope.

Temple and Irwin (2006) suggested applying the relations developed by Abt and Johnson (1991), Robinson et al. (1998), Mishra (1998), and Frizell et al. (1998) within slope ranges corresponding to the majority of the tests performed in each study. This approach was reasonable, but a problem arose in the treatment of the Mishra/Frizell work when they used a relation that calculated allowable unit discharge based on interstitial flow but did not include a second rock-size design equation that is often the limiting factor in the Mishra/Frizell iterative design process. The equations presented in the following section for design and analysis purposes follow the strategy suggested by Temple and Irwin (2006), but these equations are modified to include the Mishra/Frizell rock-size design equation. Notably, this method as described here has been incorporated into the WinDAM B computer program USDA developed to simulate overtopping flow and breaching of embankment dams (Visser et al., 2012). WinDAM B computes the discharge needed to initiate failure of riprap on the downstream slope of an embankment dam, the first step in a sequence of events that can lead to dam breach.

Research to determine boundary roughness of riprap placements has been less extensive. Anderson et al. (1970) proposed a relatively simple relation between the Manning roughness coefficient and the stone size. Abt et al. (1987) and Rice et al. (1998) developed relations that used both the stone size and the bed slope to predict the Manning roughness coefficient. Rice et al. (1998) also developed a relation for estimating the Darcy-Weisbach friction factor as a function of the relative submergence of the riprap stones. The reader is referred to these references for details of the equations.

Use of the equations and accurate estimation of flow profiles requires making practical determinations of such things as the effective top of riprap and the flow split between interstitial and surface flow. Robinson et al. (1998) provided an example demonstrating such calculations using the boundary roughness relations of Rice et al. (1998), and Frizell et al. (1998) demonstrated the determination of interstitial flows and velocities for a steep-slope situation.

8.2.2 *Design Guidance*

The guidance that follows is based on the approach suggested by Temple and Irwin (2006), modified to incorporate the Mishra/Frizell rock-size design equation. For three different ranges of slopes, equations are provided to compute either the allowable unit discharge for a given rock size or the rock size needed to accommodate a particular unit discharge.

Definitions for terms in Equations 8-1 through 8-5 that follow are:

q_a = allowable or design unit discharge, above which riprap failure is expected ($ft^3/s/ft$)

S_t = the embankment slope expressed as the tangent of the slope angle (i.e., for 2:1 slope, S_t=0.5)

D_{50} = the riprap diameter for which 50 percent by weight of the material is finer (ft m)

n_p = the porosity of the riprap

h_{rr} = the riprap thickness normal to the slope (should be in the range of $2*D_{50}$ to $4*D_{50}$), (ft)

C_u = the coefficient of uniformity, $C_u = D_{60} / D_{10}$

g = the acceleration due to gravity, (32.2 ft/s^{22})

α= slope angle from horizontal, $\alpha=\tan^{-1}(S_t)$

φ= angle of repose of angular riprap, typically about 42°

G_s= specific gravity of stones, typically around 2.65

K_x= various coefficients, provided in Table 8-1

Table 8-1.—Coefficients for riprap design equations.

Equation	Parameter	U.S Customary units (ft, s, ft^3/s)
Abt and Johnson (1991)	K_1	3.26
	K_2	0.516
Robinson et al. (1998)	K_3	4.3
	K_4	0.462
Mishra (1998) and Frizell et al. (1998)	K_5	0.5245

The Abt and Johnson (1991) relations apply to flat slopes of 50:1 to 10:1 (2 to 10 percent).

$$q_a = K_1 S_t^{-0.768} D_{50}^{1.786}$$

$$0.02 \le S_t \le 0.1 \qquad \text{Eq. 8-1}$$

$$D_{50} = K_2 q_a^{0.56} S_t^{0.43}$$

The Robinson et al. (1998) relations apply to slopes of 6:1 to 2.5:1 (17 to 40 percent), which is the range of interest for most embankment dams.

$$q_a = K_3 S_t^{-0.58} D_{50}^{1.89}$$

$$0.167 \le S_t \le 0.4 \qquad \text{Eq. 8-2}$$

$$D_{50} = K_4 q_a^{0.53} S_t^{0.307}$$

Between slopes of 10:1 and 6:1 (10 to 17 percent), a slope-weighted average of the Abt/Johnson and Robinson equations should be used:

$$X = X_{Abt}(Z-6)/4 + X_{Robinson}(10-Z)/4 \qquad 0.1 \le S_t \le 0.167 \qquad \text{Eq. 8-3}$$

Where:

$Z =$ the slope factor (e.g., Z=8 for an 8:1 slope)

X represents either the allowable unit discharge, q_a, or the rock size, D_{50}, for Abt or Robinson.

For embankments with slopes in the range of 2.5:1 to 2:1 (40 to 50 percent) the equations developed by Mishra (1998) and Frizell et al. (1998) are used. The allowable unit discharge is:

Eq. 8-4

$$q_a = \min \begin{cases} \dfrac{2.48\sqrt{gD_{50}}S_t^{0.58} n_p h_{rr}}{C_u^{2.22}} \\ \left[\dfrac{D_{50} C_u^{0.25} S_t^{0.75}}{K_5}\left(\dfrac{\sin\alpha}{(G_s\cos\alpha - 1)(\cos\alpha\tan\varphi - \sin\alpha)}\right)^{-1.11}\right]^{1.923} \end{cases} \quad 0.4 \le S_t \le 0.5$$

with the first expression based on limiting interstitial flow through the rock and the second based on rock stability. These equations, unlike those of Abt/Johnson and Robinson include factors to account for variation of the specific gravity of the rock, porosity, angle of repose, and coefficient of uniformity.

To determine rock size for these slopes, the corresponding equations are:

Eq. 8-5

$$D_{50} = \max \begin{cases} \left(\dfrac{q_a C_u^{2.22}}{2.48\sqrt{g} S_t^{0.58} n_p h_{rr}}\right)^2 \\ \dfrac{K_5 q_a^{0.52}}{C_u^{0.25} S_t^{0.75}} \left(\dfrac{\sin\alpha}{(G_s \cos\alpha - 1)(\cos\alpha \tan\varphi - \sin\alpha)}\right)^{1.11} \end{cases} \quad 0.4 \leq S_t \leq 0.5$$

To apply Equation 8-5 for design purposes, D_{50} is unknown at the outset, so the riprap thickness, h_{rr}, is also unknown. Initial estimates must be made and the equations checked iteratively to determine a suitable rock size. The riprap layer thickness can also be adjusted within the range of $2*D_{50}$ to $4*D_{50}$. Again, the first expression in Equation 8-5 is related to the requirement that all flow be contained in the interstitial zone, and the second expression is based on rock stability. In the 40 to 50 percent slope range, it is typically the second expression that controls.

These equations are all applicable to angular riprap with D_{50} less than approximately 2 feet (the upper limit of available test data), dumped randomly on appropriate bedding material in a layer at least $2*D_{50}$ thick. It should be noted there are no safety factors applied in these equations, and discharges above the computed allowable level should be expected to cause riprap failure. A designer should add a safety factor depending on the application and organizational policies. Abt and Johnson (1991) stated that the equation they developed would compute a rock size that would resist a discharge 35 percent greater than that for the desired inception of failure, but that safety factor has been backed out of the equation presented here so that all of the equations are consistently computing the discharge at inception of failure.

To illustrate the general behavior of these equations over a range of embankment slopes, they were applied to two hypothetical situations. In the first case (Figure 8-3), the equations were used to determine the allowable unit discharge, q_a, for riprap with stone sizes D_{50} = 1, 1.5 and 2 feet, over slopes ranging from 1 to 50 percent. In the second case (Figure 8-4), the equations were used over the same slope range to determine the stone size required to give overtopping flow protection at unit discharges of 10, 20, and 30 $ft^3/s/ft$. Since the Mishra/Frizell equations adjust for varying rock properties, to enable a comparison to the other simpler equations, assumptions representative of typical riprap were made:

- Coefficient of uniformity, C_u = 1.75
- Porosity, n_p = 0.45
- Specific gravity, G_s = 2.65

- Angle of repose, φ = 42°

Although it is not specifically illustrated in the figures, it should be noted for steep slopes that all flow should occur interstitially and the Mishra/Frizell interstitial flow equations must be used to determine the riprap layer thickness. For the steepest slopes shown in the figures (about 40 to 50 percent), a layer thickness of $2*D_{50}$ is adequate to fully contain the flow, but for slopes flatter than 40 percent, thicker riprap layers may be needed. The exact threshold at which flow fills the interstitial space varies in these examples and depends on the particular stone size and unit discharge.

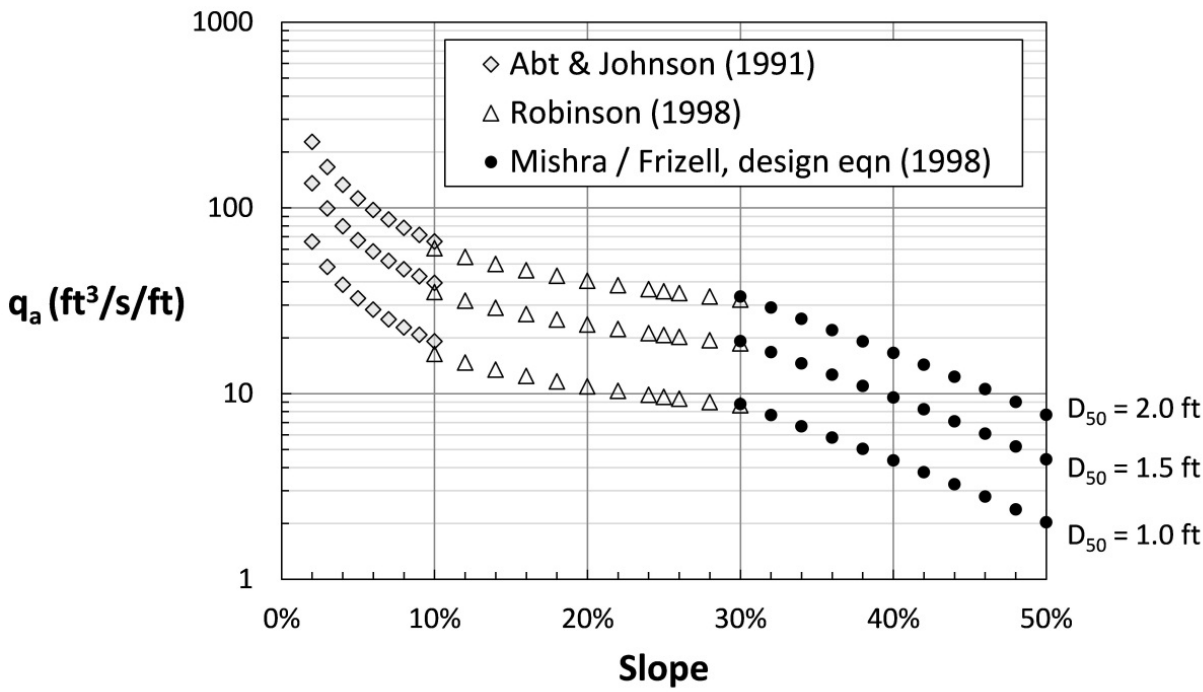

Figure 8-3.—Example calculation of allowable unit discharge as a function of slope, assuming a fixed stone size (Reclamation).

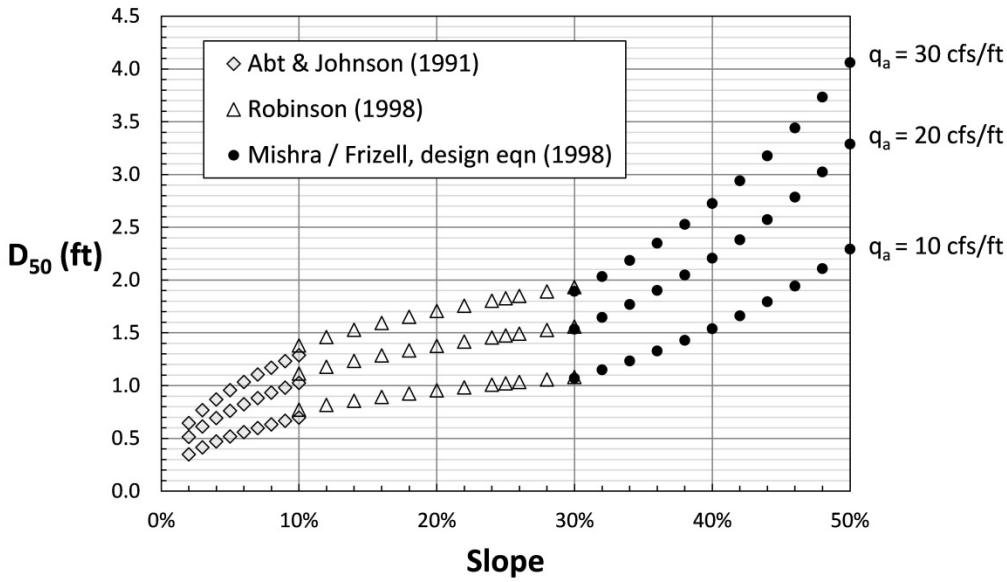

Figure 8-4.—Example calculation of required stone size as a function of slope, assuming a fixed allowable unit discharge (Reclamation).

8.2.3 *Bedding*

Reclamation's Design Standards No. 13, Chapter 7 *Riprap Slope Protection* (2013) provides design guidance for the bedding layer(s) required beneath a riprap protective layer. The bedding layer acts as a filter to protect against the loss of underlying embankment materials, and bedding layers themselves must be filter-compatible with the overlying riprap layer so that the bedding is retained by the riprap. To provide for the retention of the bedding particles by the overlying riprap layer and for the retention of the material underlying the bedding layer, the gradation of the bedding material should conform with the following filter criteria (Equation 8-6) if the embankment materials are of low or no plasticity (PI<7):

$$D_{15B} < 5(D_{85E})$$
$$D_{85B} > D_{15R} / 5 \qquad \text{Eq. 8-6}$$

Where:

D_{15B} = the 15 percent passing size of the bedding

D_{85B} = the 85 percent passing size of the bedding

D_{85E} = the 85 percent passing size of the embankment material to be protected by the bedding

D_{15R} = the 15 percent size of the riprap

When very large riprap is used, a two-stage filter/bedding layer is sometimes needed to prevent loss of embankment material through the bedding and the riprap. The thickness of bedding layers need only be sufficient to provide filter protection, and to provide a supporting bed for the riprap.

Riprap particles will partially penetrate the bedding layer and will derive some stability from this. The following are suggested bedding layer thicknesses:

Riprap layer, inches	Bedding layer, inches
12–24	9
27–36	12
Over 36	15

8.3 *Alternative Riprap Placement Methods*

The design equations provided in Section 8.2.2 are applicable to riprap dumped randomly over a bedding layer. Several investigators have noted that careful hand placement of riprap to achieve improved armor density and interlocking of individual rocks can significantly increase allowable discharges. Peirson et al. (2008) showed that a 30 percent increase in allowable discharge could be achieved, but the application of this construction method is not commonplace, and the degree of performance improvement should be expected to vary with the quality of the hand-placement work.

Grouted riprap is an alternative placement method that involves the use of a grout slurry to partially or fully fill the void spaces between the riprap. Typical applications for grouted riprap include the protection of bed and bank slopes in spillway entrance channels, turbulent areas adjacent to energy dissipators, drainage ditch linings, culvert and storm sewer outfalls, and drainways through conventional riprap (USACE, 1992). Grouted riprap is also used to prevent vandalism to riprap placements and to provide and improve pedestrian access across riprap-protected areas. When riprap is grouted, most flow within the riprap layer is prevented, so the design equations in Section 8.2.2 would not apply.

Despite the lack of research in this area, there have been several applications of grouted riprap for dam overtopping protection, mostly in the State of New Jersey. These include three high hazard dams modified over 20 years ago to resist half-probable maximum precipitation (PMP) or full-PMP flows, and four more recent projects to protect low and significant hazard dams against 100-year or half-PMP design storms. Overtopping heads have been relatively low—3 feet or less at the crest. All of these projects have featured fully grouted riprap placements on the order of 2- to 3-feet thick or more, placed over free-draining bedding and a filter layer between the bedding and the original embankment.

Cutoffs are provided upstream and downstream to prevent seepage into the bedding layer, and a toe drain exiting through the toe wall or the face of the downstream slope relieves pressure buildup below the riprap. Armoring is extended into the groin or up the abutment slopes to contain all of the expected flow within the armored area. For design guidance, the State of New Jersey has directed engineers to USACE, 1992: ETL 1110-2-334, *Design and Construction of Grouted Riprap*. None of these projects has experienced overtopping flows since they were completed (Shaffer, 2014).

Although there is currently no research to support its use for overtopping protection, the greatest potential for future use of grouted riprap in dam overtopping applications appears to be for the placement procedure known alternately as partially-grouted riprap (PGR) or matrix riprap. For this placement method, riprap is randomly dumped over bedding material and partial grouting is performed with the intent that grout should primarily be placed at the points of contact between stones, but should not fill the entire void space. Typically, grout might fill about one-third to one-half of the total void space. The objectives of this placement method are threefold:

(1) To produce conglomerated riprap particles that are effectively much larger than the base size of the stones and are tightly interlocked with adjacent conglomerates of riprap

(2) To produce a riprap layer that remains flexible and able to adjust itself to future settlement and shifting of the underlying materials

(3) to produce a riprap layer that is porous and able to relieve any buildup of pore-water pressure that might occur beneath the riprap when flow takes place over and through the riprap

This placement method has seen widespread use in Europe for several decades, especially in Germany and Switzerland, primarily for scour protection around bridge piers and abutments.

Lagasse et al. (2009) presents detailed design guidance for the use of partially-grouted riprap for bridge pier scour protection. Rather than basing stone size specifically on equations related to flow parameters, the typical practice is to select a stone size in the 9 to 15 inch range, as this facilitates effective placement of grout (Clopper, 2013). Smaller stones cause void spaces to be too small to allow access into the pore spaces by the grouting equipment, while larger stones cause voids to be so large that grout cannot be effectively kept in the contact areas between stones, but instead the grout settles to the base of the riprap layer. There is no analytical sizing of the stone for a partially-grouted riprap installation, and it should be noted again that the equations in Section 8.2.2 would not apply to any type of grouted riprap.

Lagasse et al. (2009) cites two recent research programs that conducted flume studies of partially-grouted riprap. One series of tests completed at CSU in 2005 demonstrated effective performance of partially-grouted 6-inch diameter (Class I) riprap around a prototype bridge pier with local velocities of 11 ft/s. In a test in Germany (Heibaum, 2000), partially-grouted riprap was stable and undamaged in a flow of 26 ft/s, but that test did not involve a bridge pier.

Until research specifically focused on overtopping flows can be conducted, partially-grouted riprap is not recommended for protection of embankment dams. Fully grouted riprap is also not recommended, since it suffers from the problems that partially-grouted riprap is designed to address, namely the lack of flexibility and inability to relieve high pore-water pressures.

8.4 *Construction Considerations*

USACE EM 1110-2-2302, *General Design and Construction Considerations for Earth and Rock-fill Dams* (2004) identifies practical issues that must be dealt with during construction to obtain desired overtopping protection performance. These issues relate primarily to the materials and placement methods.

8.4.1 *Material Quality Control*

Riprap protection requires good quality rock and bedding of sufficient size to meet the design requirements. Consideration should be given to materials available from required excavations as well as from nearby quarry sources. Contract documents should identify approved local sources and geologic formations that can produce acceptable material, specify controlled blasting methods for riprap production in quarries, define gradation ranges and permissible percentages of undesirable materials, define permissible ratio of maximum to minimum particle dimensions, and describe required particle quality. The control of blasting in quarries is important to prevent the development of closely-spaced incipient fractures in the produced rock that open quickly once the weathering processes begin. Freeze-thaw, wet-dry, specific gravity, absorption, sodium sulphate soundness, and Los Angeles abrasion tests should be performed to determine the durability of the material under the anticipated field conditions (detailed test procedures are given in USACE, 2004 [EM 1110-2-2302]). Service records for proposed materials should be studied to evaluate how they have performed under field conditions.

Laboratory research has shown that angularity and uniformity of the rock have significant influence on the allowable overtopping flow rates. Although specifications can be easily written, they can be difficult to meet during production, especially as rock sizes increase. Methods used to produce and obtain the rock should be selected to ensure that specifications can be met. Construction observation and testing should be performed to confirm that the slope protection

materials meet the specifications and produce stable layers of interlocking particles, and that segregation does not produce layers of reduced permeability.

8.4.2 *Installation Quality Control*

Important issues to be monitored during construction include maintaining desired layer thicknesses, ensuring the cleanliness of materials, and preventing segregation of bedding materials and riprap during handling and placement. Just as research has shown that specified placement of riprap can increase allowable overtopping flow, undesirable placement of materials could also lead to poor overtopping performance. Although random dumping should lead to uniformly acceptable placement of materials, some localized rearrangement and placement of materials is generally needed, and inspectors should be watchful for localized areas in which the resulting arrangement of rocks may appear unstable or leave the underlying bedding layer exposed. Compaction of riprap placements is generally not performed.

Some segregation is almost certain to occur during riprap placement, but the method of placement can help minimize the effects on hydraulic performance. Placing riprap initially at the top of the slope and then pushing it downslope to build up thickness in layers parallel to the embankment slope will help to keep low permeability layers running parallel to the slope. This should be preferable to adding horizontally oriented lifts beginning at the bottom of the slope, which would cause low permeability zones to be horizontal and might lead to flow being forced out of the riprap layer.

8.4.3 *Crest Details*

For slopes steeper than 25 percent (or 4:1), the testing by Mishra (1998) and Frizell et al. (1998) indicated that almost all of the flow occurs interstitially and no flow should be designed to be above the top of the riprap layer. This indicates that there is a need to ensure that flow can enter the rock layer at the top of the slope. Thus, riprap placement should be continued to the top of the slope and the exposed top surface of the layer should not be occluded by paving, infiltration of dirt, or vegetation. In the flume studies by Mishra (1998) there was never an indication that there would be a problem getting flow into the interstitial zone if the top surface of the riprap was kept clean. Those studies enclosed the riprap at the very top of the slope in a gabion basket to ensure that failure would initiate on the slope, since flow down the slope was the focus of the studies, but this does not suggest that similar protection is required in a field installation. In fact, this detail was not used in the testing by Robinson et al. (1998) at 40 percent slope, nor in any other riprap tests at flatter slopes.

8.5 *Vulnerabilities and Risk*

Riprap armoring provides a relatively resilient system for protecting against embankment erosion during small to perhaps moderate overtopping flow events. Research has thus far been limited to riprap stone sizes up to D_{50}=26 inches and slopes up to 50 percent (2:1). For embankment dams with relatively flat downstream slopes (4:1), unit discharges up to 40 $ft^3/s/ft$ may be passed safely using 26-inch rock, with typical values of C_u (1.75) and porosity (0.45). At steeper slopes, the value of riprap protection drops rapidly, and 26-inch rock on a 50 percent slope (2:1) only provides protection up to about 9 $ft^3/s/ft$.

Since research has shown that a large fraction of the flow is conveyed within the riprap layer, long-term performance can be affected by infiltration of fine materials into the riprap layer (e.g., wind-blown sediment or vegetation). Degradation of the riprap over time due to weathering processes can also affect long term performance, but this should not be an issue if high quality materials have been used.

Flow transition areas at the crest, groin, and toe are potentially vulnerable, although limited testing that has included crest and toe areas has shown thus far that failure of the riprap would occur first on the slope. Testing has not focused specifically on groin areas, where unit discharges can become much higher than on the slope. Riprap stability in the groin areas should be evaluated with consideration for these higher unit discharges. Crest, groin, and toe areas that will experience overtopping flow, as well as the entire embankment slope, should always be kept clear of obstructions (e.g., trees, buildings, and utility poles) that would disrupt the uniformity of the flow and cause flow concentration that can initiate riprap failure at lower than expected discharges. The rock chute concept tested by Robinson et al. (1998) confines the overtopping flow to a defined area and eliminates the issue of flow in converging abutment groin areas, but limits the overtopping flow section to the width of the downstream waterway.

No case histories of riprap used for overtopping protection of an embankment dam are provided in the Appendix. Two examples of riprap use are included in this chapter.

Chapter 9. Geomembrane Liners, Geocells, and Fabric-Formed Concrete

The use of geomembrane liners, geocells, and fabric-formed concrete for overtopping protection is discussed in this chapter. A geomembrane is an impermeable synthetic liner or barrier made from relatively thin, continuous polymeric sheets. The most commonly used polymers are linear low-density polyethylene (LLDPE), high-density polyethylene (HDPE), and polyvinyl chloride (PVC). Other materials used include Hypalon chlorosulphonated polyethylene (CSPE), Reinforced Polypropylene (PP-R), and ethylene propylene diene monomer (EPDM) rubber. Geomembranes are commonly installed as an impermeable sheet liner with a soil cover. A cellular confinement system (CCS), commonly referred to as a geocell, is normally made from polyethylene strips connected in a honeycomb pattern and is filled with earth materials or concrete. Fabric forms, consisting of woven, double-layer synthetic fabric, are normally filled with fine-aggregate concrete. Fabric-formed concrete systems are also referred to as articulating block (AB) mats, as described in Chapter 4.

9.1 *Geosynthetic Systems*

Geomembranes are a subset of a larger group of geosynthetics that are widely used in combination with other products to protect surfaces from erosion. Geosynthetics have a large number of uses in providing protection from dam seepage, reinforcement for dam raises, slope stabilization, and building roads on sandy or soft soils, in addition to erosion protection. Geotextiles, another subset of geosynthetic materials, have been used as an underlayment for other overtopping protection materials, such as riprap and articulating concrete blocks (ACB). Geomembranes have been used for watertight liners on the upstream face of dams. Geosynthetic materials for these uses are not described in this chapter because they are either used in conjunction with another overtopping protection system described elsewhere, or are strictly used for waterproofing unrelated to overtopping protection of embankment or concrete dams.

9.1.1 *Geomembrane Liners*

A geomembrane can be placed over an embankment dam for overtopping protection, or over an earthen section, swale, dike, or abutment away from the main dam, to provide a non-erodible surface for flow. The geomembrane should be placed over a smooth subgrade with the sides and upstream and downstream ends trenched and/or attached to fixed sills. The liner should then be protected with a granular soil cover that will wash away during flood events. Where feasible, seams between geomembrane rolls should be parallel to the flow. When geomembrane seams cross the flow, the upstream sheet should overlap the

downstream sheet. Overlaps of unbonded seams should be a minimum of 3 feet. Energy dissipation should not be allowed to occur on the liner.

Geomembrane liner materials of various types (such as Hypalon, Reinforced Polyproylene, and EPDM rubber) are available from many manufacturers. Each application would be custom designed for the site conditions.

9.1.2 *Geocells*

Geocells are CCS products that are lightweight, flexible mats made of HDPE strips and represent a synthetic cellular confinement soil stabilizer. The HDPE strips are ultrasonically bonded together to form an extremely strong, honeycomb configuration, or geocell. They are useful in a variety of applications that require a barrier or structural foundation including slope, channel, and ground stabilization. The product confines a variety of native or select fill materials, including soil, sand, aggregate, and concrete. Concrete fill is generally preferred for erosion control structures that could be subjected to severe or persistent flows or to hydrodynamic forces from high velocity flows. In concrete revetment or lining work, the CCS functions as a placement form, able to render large expanses of poured concrete flexible and permeable. A geomembrane or geotextile is often placed beneath the CCS for ease of construction or for redundant erosion protection.

Most products are available in various heights and cell sizes in solid wall or perforated wall (to allow flow between cells) styles. Cell depth typically ranges from 4 to 8 inches. Typical expanded section sizes range from 8 by 2.6 feet to 8 by 40 feet. There are many manufacturers of geocells, all trademarked products, with examples of solid wall and perforated wall products shown in Figure 9-1.

a

b

Figure 9-1.—Examples of a perforated and solid geoweb system with various fill materials (a) Geoweb™; (b) TerraCell® (Courtesy of WEBTEC, Inc, all rights reserved).

9.1.3 Fabric-Formed Concrete

An additional type of erosion protection is provided by filled-in-place fabric forms, such as the Filter Point™, Filter Band™, and Uniform Section™ from the Hydrotex® product line (manufactured by Synthetex, LLC) and fabric forms from the Texicon® product line (a subsidiary of Donnelly Fabricators). The Hydrotex Filter Point™ and Filter Band™ systems have filtering locations or drains to provide an erosion-resistant, permeable concrete lining. The Hydrotex® Uniform Section™ provides a watertight application where needed. Figure 9-2 provides examples of various fabric-formed concrete systems.

The woven fabric form consists of a series of compartments linked by an interwoven perimeter. Grout ducts interconnect the compartments, and high-strength cables are normally installed between and through the compartments and grout ducts. Once filled with grout or fine-aggregate concrete, fabric forms can provide concrete linings with deeply patterned surfaces. These patterns create a lining with large hydraulic resistance. The result is reduced overtopping flow

velocity over a dam crest, or reduced wave run up on the upstream face of a dam. In addition to erosion protection, these surface characteristics impart stability to the system by reducing velocities, and allow the designer to affect the flow characteristics of a channel, creating the opportunity for an "engineered" hydraulic system.

By choosing the correct type of fabric form, overtopping flow can be slowed, reducing downstream velocities and discharge turbulence, or a hydraulically-efficient, relatively smooth form (such as Hydrotex® Uniform Section™) can be chosen to maximize the drainage from a given area.

Filled-in-place fabric forms accommodate themselves to uneven contours, curves, and subgrades at the time they are filled, so the soil and the concrete protection are in intimate contact, reducing the chance of erosion beneath the protection. Some forms create discrete concrete units, attached to each other with fabric perimeters and/or embedded cables, and these units can articulate to adapt to uneven settlement. If settlement is a critical design consideration, care in choosing the right mat is necessary to avoid bridging or the development of voids beneath the mat.

Specifics on the fabric and final weights and dimensions of these products can be obtained from the product manufacturers and do not vary much between manufacturers. An applications chart from one manufacturer shows Filter Point™, Filter Band™, and Uniform Section™ fabric-formed concrete as appropriate for spillway and flow channel use.

Cellular confinement and fabric-formed concrete systems are provided by companies that have proprietary claims on product manufacturing, testing, and application designs. As such, it is difficult to obtain detailed data regarding performance and applicability as an overtopping protection method. The authors of this manual have provided their best judgment as to the applicability of the available design data.

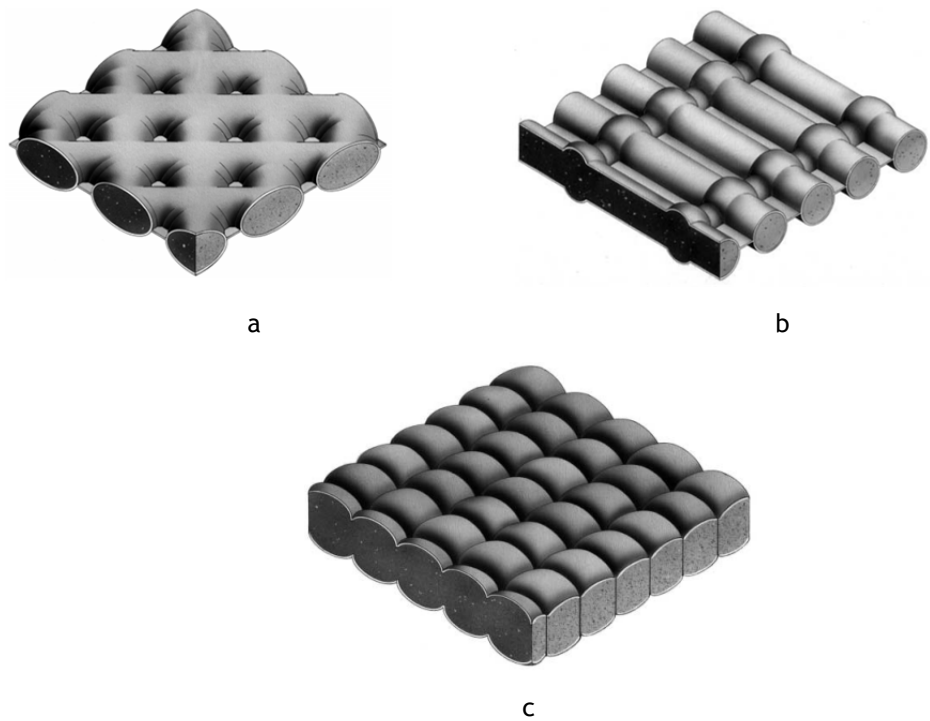

Figure 9-2.—(a) Filter Point™ fabric form pumped with concrete (b) Filter Band™ fabric form pumped with concrete ; (c) Uniform Section™ fabric form (Courtesy of: Synthetex, LLC, all rights reserved).

9.2 *Historical Perspective*

The research on geomembrane protection for earthen materials exposed to flows emerged as the membrane materials were strengthened and improved. In the late 1970s, researchers in France (Cassard, 1979) and in the USSR (Kozoreozva, 1977) thought that the use of flexible membranes as spillway protection seemed possible.

The technology was proposed for adding low-cost spillway capacity to existing or new low-head embankment dams. Therefore, testing was performed on geomembrane properties and a geomembrane-lined spillway was constructed and successfully tested in the field application in the 1980s (Timblin et al., 1988), as described in section 9.3.1.3. Not much work on flexible plain sheets of geomembrane specifically designed for water conveyance has apparently been carried out since then, perhaps due to the subsequent development of CCS and fabric-formed concrete. Research and development of CCS began with the USACE in 1975 to test the feasibility of constructing tactical bridge approach roads over soft ground (Webster and Watkins, 1977). Engineers discovered that sand-confinement systems performed better than conventional crushed stone sections. They concluded that a sand-confinement system could be developed that

would provide an expedient construction technique for building approach roads over soft ground and that the system would not be adversely affected by wet weather conditions (Webster, 1979 and 1981). These early efforts led to the civilian commercialization of the product by the Presto Products Company (www.prestogeo.com) to produce the first cellular confinement system from HDPE that was lightweight, strong, and durable (Webster, 1986). This new system was used first for load support applications in the United States in the early 1980s; second for slope erosion control and channel lining in the United States in 1984; and third for earth retention applications in Canada in 1986. Additional research on cellular confinement systems or geocells in these application areas also started during the 1980s (Engel and Flato, 1987; Simons, Li & Associates, 1988; Bathurst et al., 1993; and Crowe et al., 1989).

The first fabric-formed concrete system was developed and patented by Construction Techniques, Inc. in the mid-1960s. Geocells and fabric-formed concrete have since become fairly popular and economical methods for slope and soil stabilization as they can be filled with soil, gravel, rock, or concrete to stabilize steep slopes (California Department of Transportation [Caltrans], 2003 and 2006). However, their use for overtopping protection has been limited to date.

9.3 *Design and Analysis*

There are three factors facing the designer of a geomembrane- or geocell-lined or fabric-formed spillway or flow channel used for overtopping protection:

- Material properties of the systems, both current and long-term
- Performance of the systems when exposed to hydraulic loads
- Installation of the systems in the field

Material properties, hydraulic performance, and installation for each of the three product types are described in the following sections.

9.3.1 *Geomembrane Liners*

9.3.1.1 Material Properties

For this application, the geomembrane is covered with granular material that will protect the liner from damage caused by animals, foot and vehicle traffic, and weather or sunlight exposure. Vegetation may also grow in the soil cover, which could further stabilize the protective system. Sheet liner materials should have: high tensile strength and flexibility, high puncture and abrasion resistance, good impact tear resistance, good weatherability, and immunity to bacterial and fungus attack. The test data for the geomembrane materials that would typically be used for this type of installation may be found in Timblin et al. (1988). The materials

tested passed ASTM test methods D751 and D413 for material and seam strengths before and after exposure to the elements. See also ASTM D4354 and D4759 for sampling and testing methods. Similar materials used today include Hypalon (CSPE), PP-R, and EPDM rubber.

9.3.1.2 Hydraulic Performance

The only known geomembrane-lined spillway channel that has been designed and constructed was located on the right abutment of Cottonwood Dam No. 5 in Colorado (when discussed in Timblin et al. in 1988). It had a trapezoidal-shaped cross section with a 12-foot bottom width and 2:1 side slopes forming a channel 3 feet deep (Timblin et al., 1988). The maximum slope in the channel tested was 0.17 (6:1) and supercritical flow occurred throughout the channel. The overall drop in the test case was 21.5 feet between the spillway crest and the downstream apron. The material selected was a 36-mil reinforced Hypalon sheet.

For design purposes, a Mannings "n" value of 0.015 was used in the test case (see the case history of Cottonwood Dam in the Appendix). This assumed roughness value proved to be too high as the field measured velocities exceeded those expected, suggesting less energy loss, but performance was not compromised. A maximum design flow of 25 ft^3/s and flow velocities up to 26 ft/s were experienced by the test case (Timblin 1985 and Timblin et al., 1988). The hydraulic shear stresses associated with these velocities must be accounted for in the design material strength and anchoring systems (Chow, 1959). The differential head across the membrane and the uplift pressure must also be determined. The geomembrane was overlapped by 5 feet (without seaming) in the test case to allow for release of uplift pressures that may build up underneath the liner.

The hydraulic jump should occur downstream of the liner section at the location determined from the computed channel velocity and expected downstream tailwater. If necessary, the designer should provide a terminal structure or an energy dissipating basin to prevent erosion and undermining of the lined channel, as described in Reclamation's Engineering Monograph, *Hydraulic Design of Stilling Basins and Energy Dissipators* (1978).

A geomembrane-lined spillway would typically be considered for a low-head application and would not be subject to velocities high enough to cause cavitation.

Any new designs for a geomembrane-lined spillway or flow channel for overtopping protection should fall within the hydraulic design values of the test case (Timblin et al., 1988), unless additional testing is performed.

9.3.1.3 Installation

The sheet liner should be attached to an upstream and downstream concrete cutoff sill to prevent migration of the liner. The sheets along the channel should then be overlapped shingle-fashion by a significant amount, such as the 5 feet provided in

the field test. The liner is placed in trenches along the sides that are then backfilled and compacted. The method chosen to provide energy dissipation must be constructed downstream from the liner. The liner would not be capable of resisting the pressure fluctuations associated with a hydraulic jump. Figures 9-3 through 9-5 (with dimensions in feet and slopes in H:V) show design and installation features for the test case and may be generally used by a designer to specify details of the liner installation.

The sheet liner is installed by hand placing it over the prepared subgrade and folding it into the trenches and attaching it with redwood furring strips to the concrete cutoff walls. Machinery is used to place the granular soil cover and spread it to a minimum thickness of 12 inches.

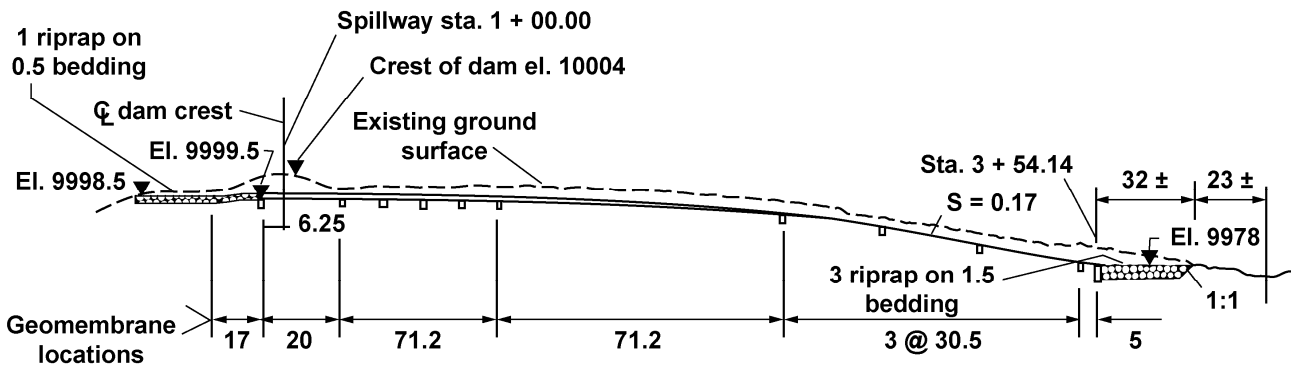

Figure 9-3.—Profile along the centerline of the spillway showing the location of the geomembrane sheets (dimensions in feet) (Reclamation figure republished in Timblin, 1985).

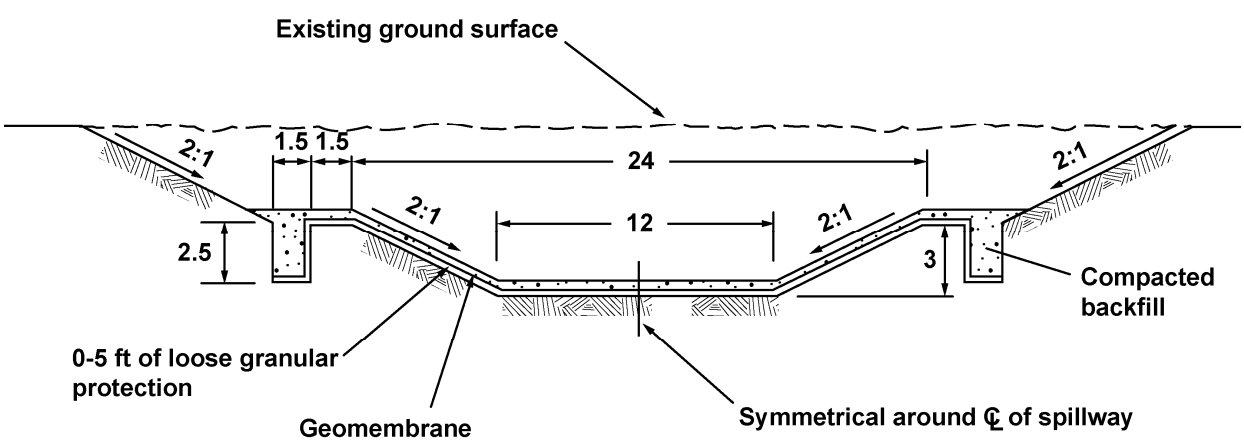

Figure 9-4.—Typical cross-section of geomembrane installation procedure along the channel (dimensions in feet) (Reclamation figure republished in Timblin, 1985).

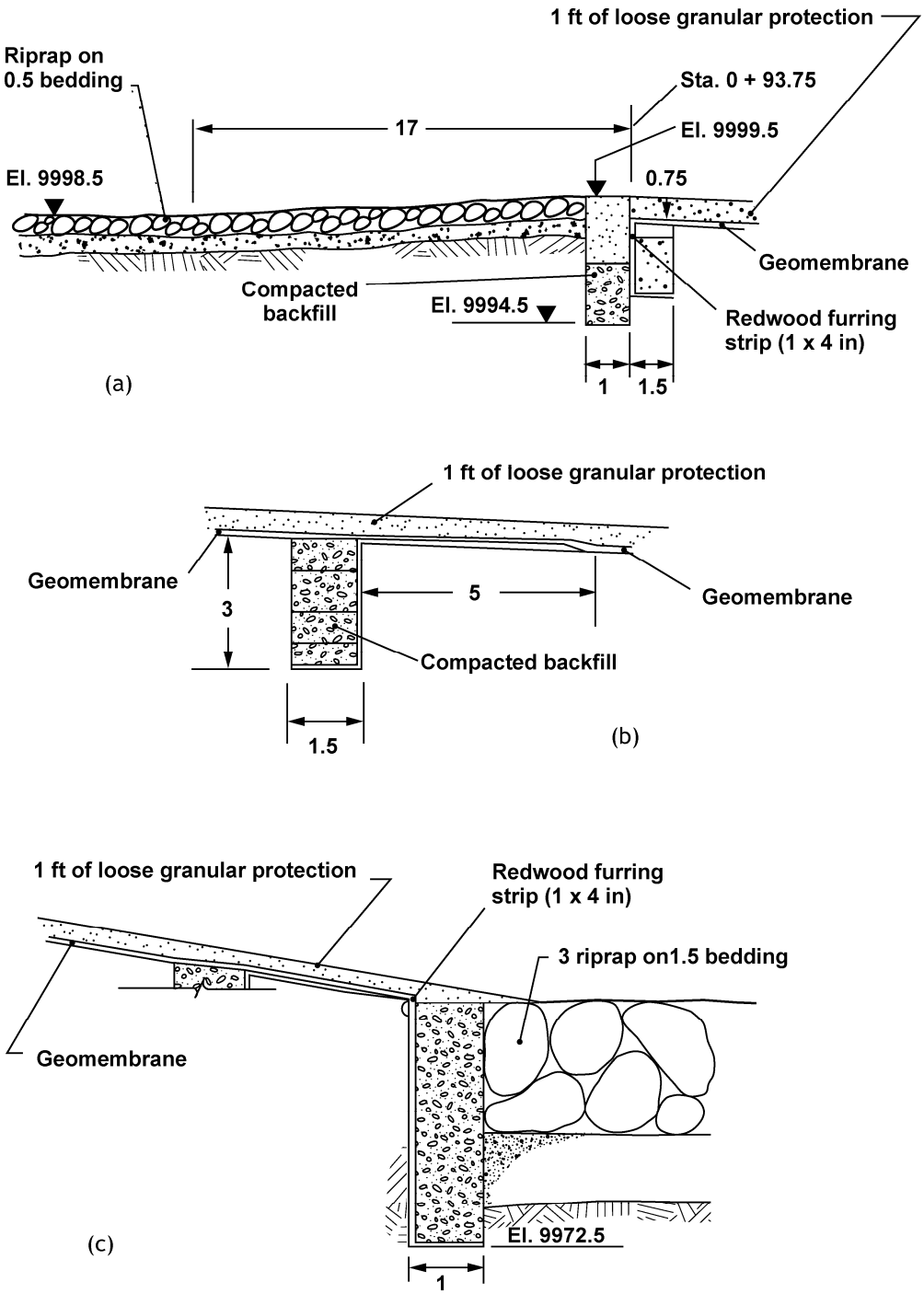

Figure 9-5.—Details of the upstream and downstream ends of the geomembrane blankets, showing a) upstream end of the spillway at the dam crest; b) typical section along the spillway showing the overlap of about 5 ft; and c) downstream end of the spillway liner attachment to the concrete end sill (dimensions in feet) (Reclamation figure republished in Timblin, 1985).

9.3.2 *Geocells*

9.3.2.1 Material Properties

Cellular confinement systems (CCS), or geocells, are typically filled with granular material or soil. However, for steep slopes and high flows, they are most often filled with concrete to provide a hard articulating armor that can conform to possible differential settlement. When filled with concrete, no soil cover would be necessary unless selected for aesthetic purposes. However, a concrete-filled geocell may be subject to potential uplift pressures if proper drainage is not provided.

Geocells have been developed since the basic sheet liner application reported by Timblin et al. (1988). These materials meet thickness, strength, weight, and UV protection criteria outlined by the various manufacturers.

9.3.2.2 Hydraulic Performance

The lateral confinement of CCS combined with anchoring techniques ensures the long-term stability of slopes using vegetated topsoil, aggregate, or concrete surfacing (if exposed to severe mechanical and hydraulic pressures). The enhanced drainage, frictional forces, and cell-fill-plant interaction of CCS limit downslope movement and the potential impact of rainfall, channeling, and hydraulic shear stresses. Perforations in the cells allow the passage of water, nutrients, and organisms within the fill. This encourages plant growth and root interlock, which further stabilizes the slope and soil mass, and facilitates landscape rehabilitation. CCS filled with concrete forms a flexible slab that accommodates minor subgrade movement and minimizes cracking. In medium- and low-velocity flows, CCS with geomembranes below and gravel cover can be used to create impermeable channels, thereby eliminating the need for concrete (Caltrans, 2006).

Proprietary testing was performed on the Presto GeoWeb CCS at CSU on a 2:1 slope for a combined system that featured a vegetated reinforced turf over the top of a CCS (Bathurst et al., 1993; Crowe et al., 1989). The following was obtained from the manufacturer's brochure:

> "No system instability was observed for shear stresses up to 15.9 lb/ft^2 and for average velocities up to 26.5 ft/s with peak velocities over 29 ft/s. Due to facility constraints that prevented testing higher velocities than those reported, system failure limits were never found. The test results for the integrated system far exceed the limits of separately reported values of the Geoweb cellular confinement system and turf reinforcement mats with topsoil/vegetated soil."

9.3.2.3 Installation

CCS installation procedures vary by product and are detailed by the manufacturers. The following information is from DX2 Geosyntex for TerraCell™. Other manufacturers will have similar requirements.

If it has been determined that TerraCell is the most appropriate solution to a slope erosion control problem, it is necessary to select the proper cell height, cell size, and fill material using Figure 9-6, which was developed for moderate site conditions. Nominal TerraCell dimensions are 9.6- by 8-inches for the standard cell, 13.7- by 12-inches for the mid-cell, and 19.2- by 16 inches for the large cell. The maximum size of the fill particles should not be larger than one-third the height of the cell, which may determine cell height. Moderate conditions are characterized by modest precipitation and some overtopping flow, without a good ground cover.

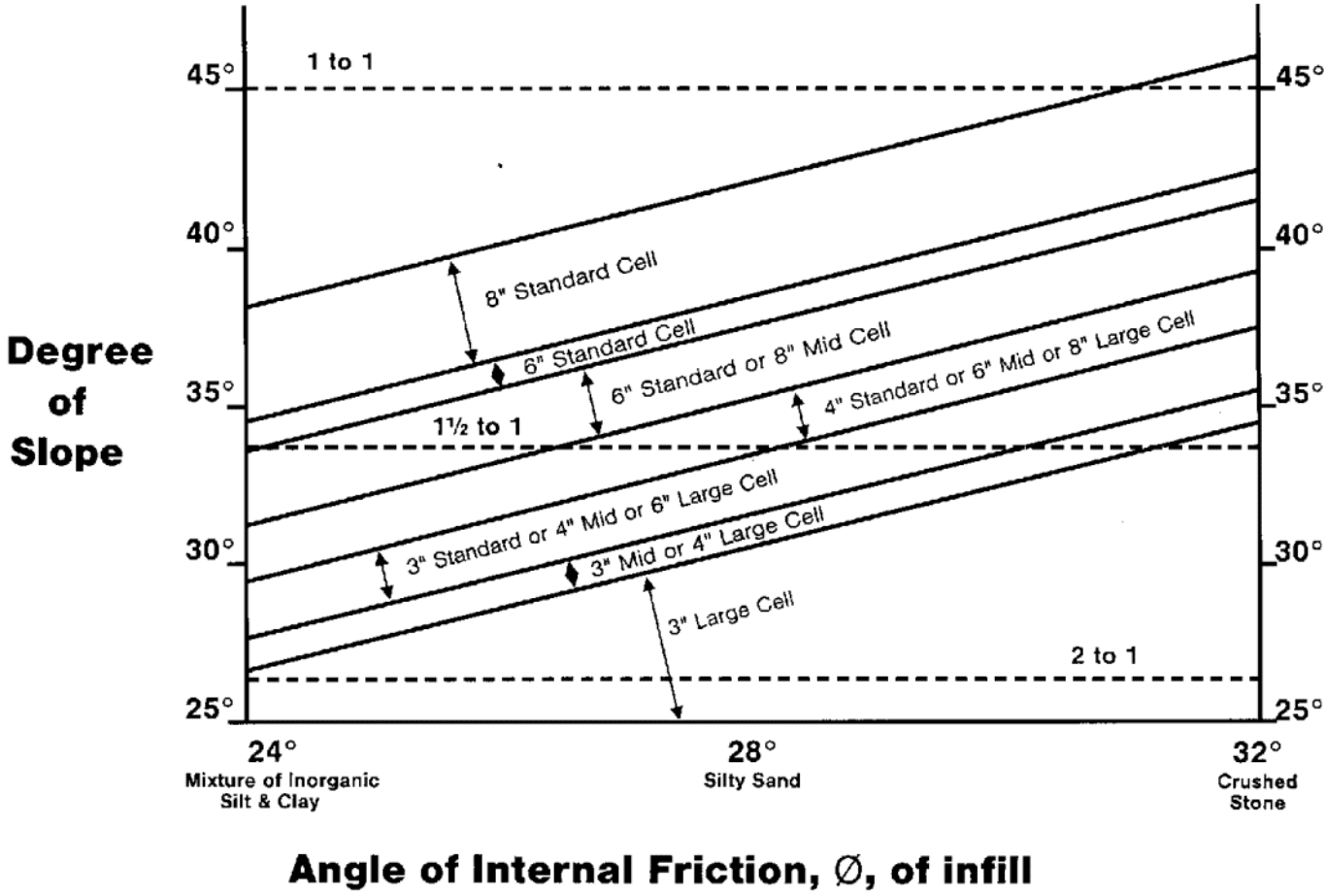

Figure 9-6.—TerraCell design guide for moderate conditions (Courtesy of DX2 Geosyntex, all rights reserved).

Proper anchoring of the TerraCell is critical to how well the product will perform. Factors to consider for selection of the anchoring method and materials include degree of slope, length of slope, external loads (such as snow), angle of internal friction of the fill material and of the slope surface material (using the smaller of the two), unit weight of the fill material, cell height, and presence of a geomembrane on the slope.

When considered for overtopping protection, hydraulic parameters must also be included. The upper edge of the TerraCell should be buried in an anchor trench to prevent surface water from undermining the installation and to anchor the TerraCell to the top of the slope. Staking or pinning the TerraCell to a slope is the common anchoring method when there is no geomembrane present and where the soil has adequate strength to retain the anchor pins. Steel reinforcing bars bent into J-hooks, with a length equal to three times the cell height are typically used. Adjacent sections of TerraCell can be joined together using stainless steel staples or hog-rings. Tendons and restraint pins are used on steep slopes where additional support is needed, or where the use of anchor pins is prohibited (such as for a geomembrance liner or on a rock base), and for very long slopes when more than one section of TerraCell is required. Tendons usually consist of high-strength polyester webbing or cord, and must be durable and resistant to creep. The design load and spacing of the tendons is determined by the force to be supported. A large number of lighter tendons is preferable to a smaller number of heavier tendons. Batten strips or large washers are needed at the bottom of the installation to avoid stress concentrations. The tendons must be securely attached to a support structure or dead-man within the anchor trench located beyond the crest of the slope.

9.3.3 *Fabric-Formed Concrete*

9.3.3.1 Material Properties

The materials for the fabric-formed concrete systems are woven from multifilament and textured yarns. The double-layer fabric is joined at interwoven controlled centers to form the concrete lining to the desired shape, thickness, and weight for the selected system. Manufacturers provide tables for the fabric property requirements based upon physical, mechanical, and hydraulic properties that are specified for the design.

9.3.3.2 Hydraulic Performance

Only the Hydrotex® Filter Point™, Filter Band™, and Uniform Section™ products are claimed by the manufacturers to have characteristics capable of handling the shear stresses and uplift forces associated with high velocity flows expected during dam overtopping or spillway flows. The systems also conform with irregular surfaces to keep intimate contact with the subgrade.

Fabric-formed Hydrotex® concrete products have been evaluated in an advanced hydraulics laboratory at a leading research facility. Flume testing of products has produced design values for permissible shear stress up to 60 lb/ft^2 to provide protection of subgrades under high velocity flow conditions. Uplift pressures were shown to be reduced with built-in filter drains.

Filter Point™ linings have a cobbled surface and a relatively high coefficient of hydraulic friction in order to achieve lower flow velocities, with Manning's "n" values reported of 0.025 to 0.030.

Filter Band™ linings are similar to Filter Point™ linings but with "band-looking" geometry and have the capability of greater relief of uplift pressure and a higher coefficient of hydraulic friction.

Uniform Section™ linings are smooth-faced, highly impermeable concrete linings. They reduce the leakage of water into or out of open channels, landfills, ponds, basins, and containment areas. The double-layer fabric is vertically connected at closely-spaced centers by interwoven drop cords of specified length to form a concrete lining of the desired thickness and weight. With a comparatively smooth and uniform cross section, Uniform Section™ concrete linings exhibit a relatively low coefficient of hydraulic friction (n = 0.015 to 0.020). Specially-designed weep tubes may be inserted through the fabric form, prior to filling, to relieve hydrostatic pressure.

The manufacturers state that a minimum factor of safety of 1.5 is required for design, and that installations should either conform to their test protocol or be accompanied by hydraulic stability calculations derived from mathematical models developed specifically for fabric-formed concrete linings used in the intended application.

9.3.3.3 Installation

Fabric forms are lightweight and can be shipped to the job site ready-to-fill. Installation consists of preparing the foundation area, laying out the fabric forms, and filling them with fine aggregate concrete from a small-line concrete pump. The "weight" component of a fabric-formed system, the fine aggregate concrete, should be readily available from local concrete suppliers. In areas with difficult or restricted access, the concrete can be pumped to the fabric forms from as far away as 800 feet. Fabric forms can generally be installed in wet environments without dewatering. A typical installation in a canal is shown on Figure 9-7.

Figure 9-7.—Fabric forms being filled with fine aggregate concrete.
(Courtesy of Donnelly Fabricators, all rights reserved).

9.4 *Construction Considerations*

Special care must be taken in preparation of the subgrade for all geomembrane liners, geocells, and fabric-formed concrete applications. The subgrade should be free of stones and rocks that could tear or puncture the materials. In the Cottonwood Dam No. 5 case history for a geomembrane liner (included in the Appendix), a small tear was observed in the liner during construction, probably the result of a fist-sized rock discovered underneath it upon inspection following operation. Similar damage to a fabric form can result in loss of concrete during pumping. A geotextile can be used for additional cushioning to improve resistance to tears and punctures for these systems.

During installation, careful attention should be paid to the edges of the geosynthetic system. Geomembrane liners normally require excavated trenches along the sides, top, and downstream toe for the materials to wrap into for stability. Durable materials, such as redwood or stainless steel strips, should be used to attach the sheet liner to the upstream and downstream cutoff walls or end sills for long-term performance. Geocells and fabric-formed concrete may be anchored at the top of the slope within a trench, with individual sections connected by durable cables or clips, as recommended by the manufacturer.

9.5 *Vulnerabilities and Risk*

The designer should not expect performance of a geomembrane-lined spillway, or of a geocell or fabric-formed concrete used for overtopping flow protection, outside the parameters of the known test case or test conditions, respectively. A design should not exceed the unit discharge, channel slopes, and flow velocities of tested conditions for that product. This implies that these systems should only be used for low-head structures and relatively flat slopes until further research shows them to be effective and safe for larger and steeper installations.

The materials available for use have improved greatly since they were first introduced in the mid 1980s; however, they must still be in good condition when the dam crest, downstream slope, spillway, or flow channel is needed for the safe passage of flood flows. This suggests the use of durable products and some degree of inspection and maintenance. The soil cover for a geomembrane liner will provide mechanical protection from foot and animal traffic, vehicle traffic, and the elements. However, debris may damage a liner during operation once the soil cover is washed away.

Potential failure modes that could occur during flood releases include:

- Improper anchoring of the geosynthetic system during construction, resulting in system migration and exposure of the earthen materials underneath during operation, leading to erosion and headcutting

- Vandalism prior to operation

- Damage occurring either prior to or during operation, leading to erosion of the underlying earthen subgrade and failure

- Formation of a hydraulic jump on the system surface during operation, leading to pressure fluctuations sufficient to cause instability and localized failure near the downstream toe

- Inadequate energy dissipation at the downstream end of the system, leading to erosion and undermining of the end sill

- Development of uplift pressures beneath the system causing loss of the system

For fabric-formed concrete installations, and for geocells filled with concrete, uplift is a real concern if adequate drainage or some form of pressure relief is not provided.

A failure of any portion of the geosyntheticovertopping protection system would likely lead to progressive upstream and lateral erosion of the dam or flow channel. Depending upon the location of the overtopping flow and duration of the flood

release, this could lead to failure of the embankment dam and/or release of the reservoir.

9.5.1 *Maintenance Considerations*

Maintenance requirements for geomembranes, geocells, and fabric-formed concrete will generally be provided by the manufacturers of the product.

Vegetative growth over the granular material covering a geomembrane liner, or within a geocell, could provide some additional erosion protection, but would have to be regularly maintained by mowing. Woody vegetation should not be allowed to grow anywhere on the overtopping protection system as this would cause turbulence and flow concentrations and increase the chances of erosion.

One case history of the experimental use of a geomembrane liner for an embankment dam spillway is provided in the Appendix (Cottonwood Dam No. 5). Also provided in the Appendix is a case history of the use of a geocell system for erosion protection along the toe of an embankment slope for a landfill site (Empire Landfill). No case histories of geosynthetic materials used for overtopping protection of an embankment dam are provided in the Appendix.

Chapter 10. Summary of Overtopping Protection Alternatives for Embankment Dams

There are many different types of overtopping protection systems that have been considered or used for embankment dams. The preceding chapters describe each of them in some detail, including a historical perspective of their development and use, design and analysis guidance, construction considerations, and a discussion of their potential vulnerabilities and risks, including summaries of their performance to date and potential failure modes. Selected case histories of these various types of systems have also been provided in the Appendix. The following sections provide a brief assessment of each of these systems using physical, hydraulic, and socio-economic factors as a means of comparison. This information is intended to provide a quick reference to identify the various similarities and differences, and potential advantages and limitations, of each of the overtopping protection systems presented in this manual, and can be used to help determine the various systems that may best apply to a given situation and be suitable for further study. These overtopping protection alternatives would then be studied further, either analytically or with laboratory model studies, for the selection of the preferred alternative and for preparation of final designs.

10.1 *Physical Factors*

Physical factors for assessment of overtopping protection systems for embankment dams include the physical dimensions of the dam itself, the physical properties of the system components, and the physical conditions of the site.

10.1.1 *Dam Dimensions*

The height of the embankment dam, or the difference in elevation between the dam crest and the downstream toe (or downstream channel), determines the drop height for the dam overtopping protection and will directly influence the maximum flow velocities that can be developed on the downstream face by converting potential energy to kinetic energy. This will also affect the amount of energy dissipation required at the toe of the dam. The dam height also affects the potential breach outflow in the event of dam failure and loss of reservoir, and therefore the downstream consequences and the hazard potential classification. If large dams are defined as those having a height of greater than 50 feet[8], only RCC, CRCS, and reinforced rockfill have been considered or used for overtopping protection of large embankment dams. Most laboratory testing of overtopping protection systems has been limited to a drop height of 50 feet or less

[8] As defined by the International Commission on Large Dams (ICOLD). Dam crest length, reservoir storage capacity, and spillway discharge capacity are also considered in the ICOLD definition.

(e.g., CSU flume), which includes various types of precast concrete blocks (ACBs), riprap, and turf systems. The remaining system types (gabions and geosynthetics) would seem to be limited to drop heights up to about 25 feet.

The downstream slope of the dam will directly affect the hydraulic shear stress on the system during operation (steeper slopes producing higher shear stresses), and may have significant effects on the construction and maintenance of the system. Most embankment slopes range between 1.5:1 and 4:1, and the systems covered here have generally been considered for use on slopes within this range, with the possible exception of geomembrane liners (at 6:1). Most laboratory testing of overtopping protection systems has included testing on a 2:1 slope (e.g., CSU flume). Rockfill and reinforced rockfill slopes can be as steep as about 1.5:1. Gabion baskets have been tested to a slope of 1:1 for low drop heights. RCC placed in horizontal lifts has been frequently used for downstream slopes of 0.6:1 or steeper in concrete dam applications (producing a thicker section with steeper slopes). Vegetated slopes are generally used on flatter slopes to accommodate mowing and other maintenance operations. Any abrupt changes in the downstream slope may create a flow disturbance and require special attention in the design. Structures that protrude into the overtopping flow may cause turbulence and scour, and should be avoided.

The crest length of the dam will determine the total discharge capacity possible for a maximum allowable unit discharge, or permit a reduction in unit discharge by fully utilizing the available crest length. The relation of the crest length to the downstream channel width will affect the amount of flow convergence required if fully utilized, resulting in potential air bulking and standing waves on the downstream face of the dam, with larger dams having longer crests in relation to the downstream channel width.

Where camber is provided on the dam crest, overtopping flows may be concentrated at the ends of the dam where crest elevations are lower, and along the downstream groins. All overtopping protection systems require a uniform crest to avoid flow concentrations. Any potential future settlement of the dam embankment could concentrate overtopping flows near the central portion or maximum section of the dam and should be accommodated by the system design. Additional protective measures and more robust overtopping protection system designs are required where flows may concentrate.

The age and composition of the dam should also be considered in the selection of an overtopping protection alternative. Newer dams that are subject to future consolidation or settlement may require a system that can conform to such movement, such as rockfill, riprap, gabions, vegetative cover, articulating concrete blocks, and some geosynthetic systems. Rigid systems, such as RCC, CRCS, grouted riprap, and fabric-formed concrete, may either crack with embankment settlement or span localized areas of settlement, producing undesirable voids beneath the protective system which may remain undetected.

Rigid systems may also be more vulnerable to seismic loads. Most embankment dams will require some provisions for drainage and pressure relief at the downstream face from existing or future seeps. The composition of the downstream face of the dam may affect filter requirements and system anchor design where required. The overtopping protection system must be filter compatible with the underlying embankment materials to prevent piping, which may require multiple zoned layers between a rockfill embankment and the system. Installation of anchors within an existing rockfill surface may also be difficult.

10.1.2 *Physical Properties of System Components*

The system components will have varying physical properties related to durability, constructability, drainage, performance, and maintenance. Durability relates to how resistant the system components are to corrosion, abrasion, cavitation damage, freeze-thaw damage, UV light, and debris loads. Systems relying upon steel components, such as gabions and reinforced rockfill, must consider corrosion protection and potential abrasion damage in the design. Stainless steel cables, galvanized or PVC-coated wire, or reinforcing bars can be used. Concrete systems should also consider potential abrasion damage and debris loads during overtopping flows by specifying higher concrete compressive strengths, or possibly allowing for a sacrificial surface subject to future loss as for RCC. Many systems may include a soil cover for protection against freeze-thaw damage (especially for RCC) and UV light (for various geosynthetic materials). Conventional concrete is commonly air-entrained for improved freeze-thaw durability. Most systems are not subjected to flow velocities sufficiently high to produce cavitation, other than possibly CRCS systems on large dams, for which air slots or ramps can be provided.

Constructability and contract duration will vary with the system and with the site. RCC and CRCS designs will require contractors experienced with that specific type of construction. RCC construction can generally be performed faster than for conventional concrete, but that may depend upon the details of the design. Systems requiring conventional earthwork, such as vegetative cover and rockfill, will generally be the most easily constructed provided the materials are available at the site. Gabions may also fit in this category. Reinforced rockfill will generally be limited to new construction due to the deep anchors required. Proprietary systems, such as most ACBs and geosynthetics, will require consultation with the manufacturers for design and construction assistance.

Some form of drainage or pressure relief will be required for all overtopping protection systems. Some systems provide natural drainage, such as gabions and rockfill, while others will require special drainage layers, collector pipes, weep holes, and outlets. Drainage systems must protect against the development of uplift pressures and be adequately filtered to prevent internal erosion of fine-grained materials.

The performance of most overtopping protection systems in the field under design loads is largely untested due to the remoteness of the design flood events. All systems included in this manual have been tested in the laboratory, or to some degree in the field, and the design parameters of any overtopping protection system should be within the limits tested. Numerous RCC overtopping protection projects have been shown to perform well for long durations and for overtopping depths of up to several feet. Some overtopping of cable-tied ACBs (e.g., for a temporary cofferdam at Portugues Dam in Puerto Rico) and non-cable-tied ACBs (e.g., for downchutes at Richmond Hill Mine, in Appendix) have been reported. Since embankment dams normally have a downstream slope that is either vegetated or composed of rockfill, any overtopping of embankment dams can provide information as to their performance up to the maximum conditions sustained, with or without failure (see discussions of Virginia Kendall Dam in Section 6.5 and the four dams on the Yellow River in Section 2.4.1, which all had a vegetated overflow surface). The potential vulnerabilities and risks of each system should always be carefully evaluated before selection for final design and construction.

Some overtopping protection systems use geotextiles as the primary component, or to provide for filtration, drainage, or added erosion protection of the underlying soils. While the use of geotextiles is gaining acceptance for some dam applications, many regulatory agencies (including Reclamation) would not use a geotextile in an embankment dam where its poor performance could lead to failure of the dam or require costly repairs. The filtration function of a geotextile located beneath an overtopping protection system is usually critical to the successful operation of the system. Geotextiles may tear with the placement of the overtopping protection units or displace under the high velocity and turbulent flows of the overtopping event. In some cases, system failure at one small location can cause complete failure of the dam. Overtopping protection systems that rely on a geotextile as an essential line of defense to protect against scouring of the underlying soil materials during overtopping of an embankment dam should be designed with special attention to the durability and longevity of the geotextile or should be avoided.

A terminal structure is normally required at the downstream end of the system to provide energy dissipation for the overtopping flow. Stepped systems, such as RCC placed in horizontal lifts, tapered wedge blocks, and stacked gabions, or systems with high surface roughness, such as rockfill, riprap, and most fabric-formed concrete, will provide some energy dissipation before reaching the toe, which can result in the design of a smaller terminal structure. Most systems require some additional strength or capacity to resist the larger hydraulic forces normally associated with a hydraulic jump, such as an increased thickness or additional reinforcement, while other systems must avoid the occurrence of a hydraulic jump on the surface entirely.

Maintenance requirements will also vary with the system. All systems should be inspected regularly to the extent possible for signs of deterioration or damage. Buried systems will still require the maintenance of the vegetative or soil cover. Vegetation must be maintained in good condition and mowed to a height between 2 and 6 inches to remain effective. Trees, shrubs, or other woody vegetation should never be permitted on the overtopping protection, to avoid potential damage by roots, allow proper inspection, and avoid flow disturbance during operation. Exposed concrete surfaces should be inspected for cracks and open joints. Drains should be periodically inspected and outlets should be maintained open and free-draining. Systems relying upon steel components, such as gabions and reinforced rockfill, must be periodically inspected for corrosion or abrasion damage. Proprietary systems should be maintained in accordance with the manufacturer's instructions.

10.1.3 *Site Conditions*

Site conditions include climatic conditions, and will affect the availability of system components or materials. Climatic conditions will determine whether freeze-thaw protection is a consideration (not a concern in warmer climates) and the ability to sustain a good grass cover for vegetated systems or in the soil cover for buried systems (i.e. sufficient rainfall and moderate temperatures). High temperatures or extreme temperature ranges may cause expansion and delamination or cracking of cast-in-place concrete systems.

Site access and the availability of materials will affect construction costs and may favor some systems over others. RCC and CRCS systems, and fabric-formed concrete, require a sufficient source of good quality sand and coarse aggregates and of cementitious materials. Precast concrete systems generally require a local manufacturing facility, and access for tractor-trailers if delivered to the site in cable-tied mats. Rockfill and riprap systems will require suitable local supplies of good quality rock of a sufficient size for the design. Otherwise, smaller rock may require (in order of decreasing size) a reinforced rockfill, gabion, or geocell system design, if suitable for the application.

10.2 *Hydraulic Factors*

Hydraulic factors resulting from selection of the IDF for the overtopping protection system include the design unit discharge and total discharge, design head on the crest, maximum flow velocity, and maximum shear stress. These factors are interrelated, as the:

- Total discharge is the product of the design unit discharge and the crest length
- Design head is a function of the design unit discharge and the crest coefficient

- Flow velocity (or terminal velocity in some cases) is a function of the unit discharge, drop height, and surface roughness
- Shear stress is a function of the flow depth (which is related to the flow velocity), downstream slope, and unit weight of water

The highest unit discharges—and highest design heads—of all of the overtopping protection systems evaluated for this manual are associated with the RCC and CRCS systems. Attachment 1 indicates maximum unit discharges of 316 and 340 $ft^3/s/ft$, and maximum overflow depths up to 20.4 feet, for RCC overtopping protection projects in Texas and Tennessee.

The average design unit discharge for all RCC overtopping protection projects in the United States is about 80 $ft^3/s/ft$. Reclamation prepared designs for a CRCS system requiring a maximum unit discharge of 280 $ft^3/s/ft$, with a corresponding maximum overflow depth of about 18 feet for A. R. Bowman Dam (see the case history in Appendix).

Of the precast concrete block (or ACB) systems, cable-tied mats have been tested to a unit discharge of about 30 $ft^3/s/ft$ (or an overflow depth of 4.2 feet), while tapered wedge blocks have been tested to a higher unit discharge of about 42 $ft^3/s/ft$ (or an overflow depth of 5.5 feet).

One reinforced rockfill dam (Pit No. 7 Afterbay Dam) has sustained overtopping flows of up to 153 $ft^3/s/ft$ (or an overflow depth of 14 feet) with some damage, while most flow-through rockfill and riprap installations are generally limited for design to much lower unit discharges between about 10 and 24 $ft^3/s/ft$ (or overflow depths between about 2 and 4 feet).

Gabions have performed satisfactorily for unit discharges of up to 32 $ft^3/s/ft$, with similar performance for reinforced turf.

Natural grass systems are extremely dependent upon the type and quality of the grass cover, and composition of the underlying soil, and will have design unit discharges ranging between 6 and 24 $ft^3/s/ft$ (or overflow depths between about 1 and 4 feet). Unlike the other systems, natural grass systems are also limited by overtopping duration to a period of hours, depending upon the erosionally effective stress and clay content of the soil (see Chapter 6).

Many of the systems have been tested to a drop height of up to 50 feet, and have corresponding maximum flow velocities between 20 and 30 ft/s. Applications of RCC and CRCS for higher dams will result in higher flow velocities. Of generally greater importance to performance of these systems is the associated shear stress, or the product of the slope, flow depth, and unit weight of water. At any given location on the slope, the unit discharge is equal to the product of the flow depth and flow velocity. The unit weight of water is typically 62.4 lb/ft^3. The maximum allowable shear stresses of systems reporting shear stress as a factor range from

about 9 lb/ft^2 (without failure) for synthetic turf revetments, to about 16 lb/ft^2 for a vegetated geocell, and 35 lb/ft^2 for a gabion. Fabric-formed concrete reported an allowable shear stress of 60 lb/ft^2. Natural grass systems under optimum conditions are limited to a shear stress of 13.5 lb/ft^2 or less, beyond which instantaneous failure of the vegetal cover would occur through uprooting or tearing and removal of the leaves and stems (see Chapter 6).

10.3 *Socio-Economic Factors*

Socio-economic factors affecting the selection of an overtopping protection system include construction cost, aesthetics, and downstream consequences. Although a detailed evaluation of construction costs for the various systems is beyond the scope of this manual, some information on construction cost comparisons between selected systems has been presented.

Design studies of potential overtopping protection systems for the tallest embankment dam considered to date, at 200 feet (A. R. Bowman Dam), focused on RCC and CRCS systems in 1992. At that time, a smooth CRCS system was determined to be more economical than a stepped RCC system. A reinforced rockfill alternative was determined to have the lowest construction cost, but was not considered technically feasible for that dam height (200 feet) and depth of overtopping (18 feet). However, based on the large number of RCC overtopping protection projects in the U.S., compared to the other systems, it is assumed that for those particular projects (with an average height of 44 feet and an average design overflow depth of 8 feet), RCC was found to be a very cost effective system.

For smaller dams with relatively small depths of overtopping, natural grass may be the cheapest alternative where feasible, followed by turf reinforcement and synthetic turf revetments. Gabion structures are generally considered to be more economical than rockfill or riprap placements (all other factors being equal) due to the ability to construct them without heavy equipment. Rockfill (including reinforced rockfill) and riprap placements will generally be less expensive than concrete systems (RCC, CRCS, and ACBs) when suitable rock materials are locally available. Of the concrete systems, ACBs are probably most economical for small projects when precast concrete blocks can be supplied locally, assuming they are technically feasible for the application. Future maintenance costs for all systems may also be an important factor in the evaluation and selection process.

Aesthetics may play an important role in the final appearance of an overtopping protection project. Many completed RCC and ACB installations on the downstream face of embankment dams have included the addition of a soil cover and grass to preserve the natural appearance of the site. As discussed previously, four RCC overtopping projects on the Yellow River (Section 2.4.1), and three ACB overtopping projects along the Blue Ridge Parkway (within a National Park)

(Section 4.1), included a soil cover with grass to blend with the surroundings. Synthetic turf revetments are designed to look like natural grass to improve the appearance of a site that perhaps could not sustain grass. Gabions and geocells can be vegetated, and geomembrane liners require a soil cover for protection. Rockfill and riprap placements also have a natural appearance and can blend in with rocky landscapes. For proper performance, CRCS and tapered wedge block installations are normally not covered with soil and will therefore retain the appearance of concrete. Although uncommon, colored concrete or concrete stains could be considered for these installations if necessary.

Hazard potential classification is based on the probability of life loss, and the extent of property damage, in the event of dam failure. Dams located in or near populated areas will generally have a significant or high hazard potential classification. Some of the overtopping protection systems considered in this manual may not be considered appropriate for use for significant or high hazard potential dams by some regulatory agencies, at least until more performance data are collected. For example, Reclamation is developing a document that would limit the use of tapered wedge blocks (specifically ArmorWedge blocks for which Reclamation holds the patent) to low hazard potential dams at this time. A similar concern may exist for the use of geomembrane liners and geocells, due in part to concerns for their durability and longevity. It is also currently Reclamation's position that there is too much uncertainty and too great a chance of dam failure with a rockfill protection system, whether or not it is reinforced, to employ it as the only means of protection from floods that overtop a (new or modified) high or significant hazard earthfill embankment dam. The designer of any overtopping protection project must determine whether there are any regulatory requirements or constraints that may limit the types of overtopping protection systems available for further consideration.

10.4 *Summary Table*

Table 10-1 provides a summary of design parameters for various overtopping protection systems for embankment dams that may represent practical upper limits for their applications. The designer, however, must confirm that any particular system selected will perform satisfactorily for the actual conditions of a given project. Most regulatory agencies will only approve applications of overtopping protection technology for embankment dams that are clearly within the established capabilities of the technology proposed.

Table 10-1.—Summary of design limits for overtopping protection systems

Protection system	Chapter	Dam height (feet)	Unit discharge ($ft^3/s/ft$)	Overflow depth (feet)	Flow velocity (ft/s)	Shear stress (lb/ft^2)
RCC	2	100-200	316-340	20	20-30+	
CRCS	3	150-200	240-280	20	80+	
Cable-tied ACBs	4	40	30	4.2	26	19+
Wedge blocks	4	50-60	42	5.5	45	
Gabions	5	25	30-40	4.5	24-30	35
Grass	6	25-50	6-24	1-4	9	13.5
Reinforced grass	6	40-50	32	5	20	
Synthetic turf	6	40-50	30	5	29	9+
Reinforced rockfill	7	140	153	10-14		
Rockfill	7	50	10-24	2-4		
Riprap	8	50	10-24	2-4		
Geo liners	9	25	2	1	26	
Geocells	9	25			29	16
Fabric-formed concrete	9	25				60

Notes:

- Typical embankment slopes assumed (1.5:1 to 3:1)
- See reference chapter for more information.
- Natural grass systems assume good cover and are time dependent (i.e., for short durations).
- Rockfill and riprap systems are size and gradation dependent (i.e., larger rock of uniform size performs best)

Part 2: Concrete Dams

Chapter 11. General Considerations for Concrete Dams

Concrete dams generally pose less concern regarding failure during an overtopping event than do embankment dams. The dam itself is typically considered non-erodible, and the foundation is generally erosion resistant as most concrete dams are founded on rock. Rock foundations can still be erodible; however, depending on the weathering and fracture profiles in the foundation and the spacing, orientation, opening, and continuity of joints and other discontinuities in the foundation rock. The first part of this chapter (Sections 11.1 through 11.6) provides some general guidance for evaluating the potential for dam failure given flood overtopping and the second part of this chapter (Sections 11.7 through 11.8) focuses on evaluating and designing remedial measures if corrective action is warranted.

11.1 *Historical Perspective*

There have been a number of instances where concrete dams were overtopped. Some case histories of concrete dams that overtopped during large floods are briefly described below.

11.1.1 *Sweetwater Dam—California: 1895*

In 1895, a rain of six inches in a 24-hour period created a catastrophic flood. The result was that Sweetwater Dam was overtopped for a period of 40 hours, with the highest reservoir level 22 inches over the top elevation of the parapet located on the dam crest. The dam remained stable during this event, but the cascading water caused erosion downstream from the structure and washed away some of the pipeline and other facilities. Following this flood, the parapet was raised two feet, except for a 200-foot long section in the middle of the dam that was left as an overflow weir or spillway. An additional spillway was added on one abutment of the dam. On January 14, 1916 the dam overtopped again, following 6 days of rain. Another storm drenched the county on January 24 that same year, and the lake rose 3 feet above the top of the dam, creating a huge waterfall as it spilled over the entire span of the dam. This overtopping initiated erosion of the upper abutments of the dam and created erosion channels around the ends of the dam. This created a torrent of water that rushed down the Sweetwater Valley, causing extensive damage. A more detailed discussion of this potential failure mode is provided in the Appendix.

11.1.2 *Secondary (Saddle) Dam of Sella Zerbino—Italy: 1935*

The Secondary Dam of Sella Zerbino is one of two dams that was completed in 1925 to form a reservoir on the Orba River, in South Piedmont, Italy, near Liguria. The main dam is a 154-foot high gravity arch dam and the secondary dam was a 46-foot high concrete gravity dam. The secondary dam was added late in the design process to close off a low spot in the reservoir rim, when it was decided to increase the capacity of the reservoir. The secondary dam was designed and constructed quickly, without any geologic investigations. The foundation for the secondary dam consisted of highly faulted and fractured schistose rock. During initial filling, significant seepage was observed downstream from the dam. A large storm occurred in the drainage basin above the reservoir on August 13, 1935. It was reported that 14 inches of rain fell in the Orba basin in less than 8 hours, equating to about a 1,000-year event. The inflow into the reservoir resulted in both dams being overtopped by about 6 feet. The Secondary Dam of Sella Zerbino failed as a result of the overtopping, resulting in over 100 fatalities. (See www.molare.net).

11.1.3 *Gibson Dam—Montana, USA: 1964*

Gibson Dam is a 199-foot-high concrete arch dam constructed by Reclamation on the Sun River on the east side of the Continental Divide. The dam was completed in 1929, and the spillway was modified in 1938. In June 1964, a major flood developed in the area, producing 30-hour rainfall amounts from 8 to 16 inches. Overtopping of Gibson Dam began at 2:00 p.m. on June 8 and continued until 10:00 a.m. on June 9. High water marks indicated a maximum overtopping depth of 3.2 feet. The operators had left two of the spillway gates completely open, two partially open, and two completely closed. The access road was inundated by the overtopping flows, and personnel could not get to the spillway gate controls to operate them. However, even if all gates had been fully open, the dam would have overtopped. The dam survived the overtopping, with some erosional damage to the limestone abutments. A more detailed discussion of this case history is provided in the Appendix.

11.2 *Failure Mechanisms (Potential Failure Modes)*

Overtopping of concrete dams can lead to dam failure and an uncontrolled release of the reservoir through a number of mechanisms. These general potential failure modes are described below. The specifics of a potential failure mode will depend on the site-specific characteristics of the dam and foundation.

11.2.1 *Scour and Undermining*

Rock foundations are generally more resistant to erosion than a soil foundation, but rock foundations can erode extensively, depending on the characteristics of the foundation rock mass, and erosion can lead to undermining and breach of the dam. The following description is an example of a potential failure mode involving scour and undermining of a concrete dam:

During a large flood, the concrete dam overtops and a scour hole develops downstream from the dam, as rock blocks are plucked from an area on the downstream right abutment above the tailwater pool. Headcutting erosion initiates, which progressively extends the erosion in the upstream direction. The concrete gravity dam is undermined, resulting in loss of foundation support and instability in the dam due to sliding of two of the concrete dam monoliths at the foundation contact. The adjacent monoliths are not adequate to support the sliding monoliths leading to a failure of the shear keys at the vertical contraction joints in the dam, continued sliding and a reservoir release through the area of the two failed monoliths.

11.2.2 *Scour and Exposure of Sliding Planes of Foundation Blocks*

Dam failure can occur even if the dam is not undermined due to scour and headcutting. The following description is an example of a potential failure mode involving scour that develops downstream from the dam foundation but that leads to instability in the dam foundation:

During a large flood, a concrete butress dam overtops and a scour hole develops downstream from the dam, as rock blocks are plucked from an area near the center of the dam. The scour hole does not progress upstream, but widens and deepens. The scour hole becomes large enough that the sliding plane and side planes for a large foundation block are able to daylight (with the foundation material removed the foundation block planes intersect the sides of the scour hole opening) into the large opening. With the removal of passive foundation rock, which stabilized the foundation block, sliding of the block initiates. The block is large enough that a significant portion of the foundation support for the buttress dam is removed. This causes stress in the dam concrete that cannot be effectively redistributed and leads to extensive cracking of the dam. The cracking leads to instability in the center portion of the dam and loss of the dam in this area. The majority of the reservoir is lost through the breach in the dam.

See Figure 11-1 for a depiction of this potential failure mode.

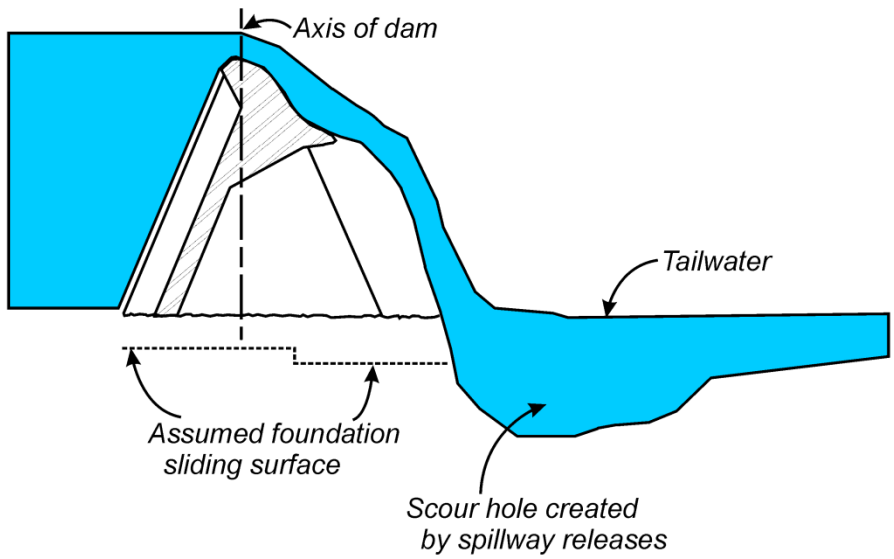

Figure 11-1.—Scour downstream from concrete dam showing potential for daylighting of foundation discontinuities (Reclamation).

11.3 *Concrete Dam Type*

There are three main types of concrete dams: gravity dams, arch dams, and buttress dams. They have different footprints and different abilities to withstand erosion of the foundation downstream and underneath them:

- Gravity dams have a wide base and are massive structures. Undermining of the dam may have to be extensive to result in dam instability.
- Arch dams have a smaller footprint and can be more easily undermined, but they also have the ability to redistribute loads effectively in the arch and cantilever directions.
- Buttress dams have a more limited footprint than gravity dams and can be vulnerable if localized erosion occurs at the location of a buttress.

The three basic types of concrete dams will be discussed in more detail here. Each has unique stability considerations that can be affected by erosion of the dam foundation.

11.3.1 *Concrete Gravity Dams*

A concrete gravity dam achieves stability through the massive nature of the structure. The size and shape of the structure makes it stable against sliding and overturning. Gravity dams have wide bases and localized erosion at the toe of the dam can likely be tolerated in most cases without significantly affecting the stability of the dam. Exceptions to this would be if extensive erosion occurs

(encroaching on the middle third of the dam base) or if a large removable foundation block is allowed to daylight due to erosion at the toe of the dam, and driving forces on the foundation block are sufficient to initiate sliding.

11.3.2 *Concrete Arch Dams*

A concrete arch dam provides redundant load carrying capacity. That is, an arch is a very forgiving structure. If one part of the structure is overstressed, for example due to cantilever cracking (e.g., horizontal cracking due to large vertical tensile stresses) at the upstream face of the dam, the load can be transferred to other parts of the structure and transmitted by arch action to the abutments.

A possibly more serious condition occurs when an abutment foundation block upon which the dam rests becomes unstable under increased flood loading, which may be compounded by overtopping flows and foundation erosion. The increase in reservoir level not only affects the load on the dam which will be transmitted to the foundation, but also the hydrostatic forces on the foundation block bounding planes (joints, faults, shears, bedding plane partings, foliation planes, etc.). Overtopping flows can also enter discontinuities downstream from the dam, further pressurizing these features. Therefore, it is important to perform abutment stability analyses under the increased loading (see Scott, 1999).

11.3.3 *Concrete Buttress Dams*

Buttress dams are concrete structures consisting of two basic features: an upstream water barrier and buttresses. The upstream water barrier can be a flat slab, large domes, cylindrical arches, or massive heads buttresses. The upstream water barrier transfers the reservoir load into the buttresses that then transfer the load into the foundation similar to a gravity dam. Buttress dams can be thought of as hollowed-out gravity dams with a sloping upstream face. They were typically built in the first half of the 20th century instead of gravity dams to save on concrete material costs. The sloping upstream face allows the buttresses to efficiently carry static loads because the weight of the water on the dam adds to the vertical force transmitted to the foundation and therefore increases the stability of the dam. Simply supported struts may be installed perpendicular to and between buttresses to provide lateral support. Struts may not be installed if the buttresses are more massive. Depending on the thickness of the concrete members, buttress dams may or may not have reinforcing steel. Also, since most of the buttress dams were built in the early 1900s and static loads are carried in compression, reinforcement is minimal by current standards.

Buttress dams can be vulnerable to erosion from overtopping flows if the erosion occurs adjacent to a buttress and leads to undermining of the buttress or daylighting of sliding planes for removable foundation wedges. Either of these conditions could lead to sliding of a buttress and failure of the buttress dam.

11.4 *Site Implications*

11.4.1 *Geometry of Top of Dam*

The geometry of the top of the dam will influence the potential for erosion of the dam foundation because of the potential for the concentration of overtopping flows. If the top of dam or top of parapet walls on the crest of the dam are at a constant elevation, the depth of overtopping flows will be uniform across the top of the dam. If the top of dam is not at a uniform elevation, or if the parapet wall does not extend completely to the abutments or has breaks in it (not continuous), there may be locations where flows concentrate and erosion initiates. Dams can be designed or modified to limit the portions of the dam that are overtopped. This can reduce the extent of overtopping protection that is needed on the downstream abutments and dam foundation.

11.4.2 *Concentration of Flows Along Groin*

In addition to the flows that impinge on a dam foundation from overtopping flows, more effects from overtopping flows may result from flows that initiate at the upper abutments and then increase due to accumulations of other overtopping flows that then flow down along the groin of the dam (i.e., dam foundation contact along the abutments). These flows may become substantial, especially for dams with long crest lengths, and these flows may have sufficient energy to erode the foundation rock independent or in combination with the erosion that takes place from the impinging flows.

11.4.3 *Trajectory of Overtopping Flows*

The trajectory of overtopping flows will determine:

- Where the overtopping flows will impact on the foundation
- The location where erosion of the dam foundation is likely to start, if erosion initiates.

The trajectory of the jet will be a function of the overtopping depth, the geometry of the dam and foundation and the details of the dam crest (whether or not parapet walls are provided on the crest of the dam and the details of the parapet wall).

The jet characteristics must be carefully determined to adequately predict the erosion or scour potential. The flow overtopping a concrete dam is shown in the definition sketch, Figure 11-2(a). Important parameters are the initial angle of issuance, which will typically be zero for dam overtopping flows, and the initial jet thickness as the jet leaves the top of the structure (brink depth). The brink depth and initial velocity are computed from the discharge over the dam.

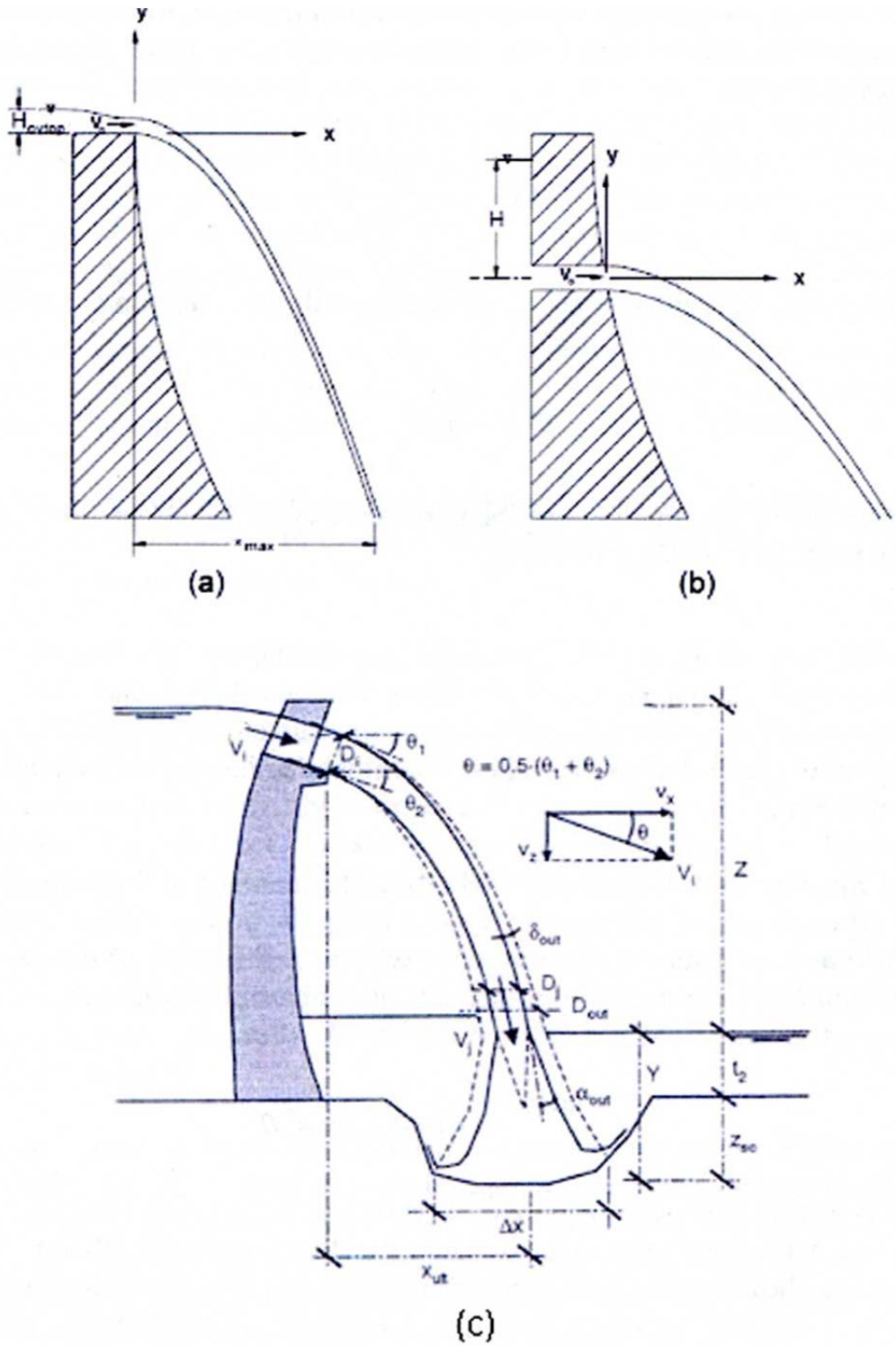

Figure 11-2.—Free jets (a) overtopping a dam, (b) issuing from an orifice through a dam, (c) definition sketch for parameters of a free falling jet.
(Courtesy of Bollaert, 2002, all rights reserved)

The discharge is computed using the weir equation in Equation 11-1.

$Q=CLH^{1.5}$ **Eq. 11-1**

Where:

C = the discharge coefficient for the dam crest

L = the length of the dam crest

H = the overtopping head

The critical flow depth is computed by the relationship, shown in Equation 11-2,

$d_c = (q^2/g)^{1/3}$ **Eq. 11-2**

Where:

q = the discharge per unit of crest length

g = the acceleration due to gravity

The brink depth can be determined using relationships developed between the critical depth and the brink depth by Rouse (1936) and Delleur et al. (1956) (see Wahl et al. (2008) for details of both studies).

The trajectory of overtopping flows can be computed using the equation of motion, assuming no aerodynamic influences on the jet. The equation (Equation 11-3)for the bottom edge of the trajectory of a jet issuing horizontally from the top of the dam due to dam overtopping is:

$y = -gx^2/((2)V_i^2)$ **Eq. 11-3**

Where:

V_i = the mean jet velocity at issuance from the dam.

A more general equation (Equation 11-4) allowing for the initial jet to be inclined at an angle θ is (Wahl et al., 2008):

$$y = x \tan\theta - \frac{x^2}{4Kh_v(\cos\theta)^2}$$ **Eq. 11-4**

Where:

h_v = the velocity head at the brink

K = an empirical constant, set equal to 1 to obtain the theoretical trajectory neglecting aerodynamic effects.

The upper edge of the jet is defined by adding the initial depth or jet thickness to the bottom edge of the jet. These basic equations provide a general indication of the impingement points of the overtopping flows. The impingent point will also vary, depending on the downstream geometries. Higher on the abutments, the jet will impinge a shorter distance from the dam crest, since the vertical distance to the foundation is less. The trajectory of the overtopping flows can be calculated for a number of dam cross sections and the impingement locations then plotted in plan view. This is useful for identifying the portion of the overtopping flows that will discharge into the downstream tailwater, and if overtopping protection is already in place can be used to determine if the extent of the overtopping protection is adequate. Figure 11-3, 11-4, and 11-5 provide examples of this.

Changes in jet characteristics take place as the jet falls through the air to the impact point with the foundation or with tailwater (see Figure-11-5). An inner core of the jet remains unaffected by aeration, but diminishes in size as the jet travels through the air, while the outer part of the jet begins to aerate and grows in size. A first refinement in the modeling of overtopping jets is to predict the dimension of the inner jet core and outer jet spread. Using the continuity equation, Ervine et al. (1997) developed an equation (Equation 11-5) for the diameter of the core of a round jet (D_j):

$$D_j = D_i(V_i/V_j)^{1/2} \qquad \text{Eq. 11-5}$$

Where:

D_i and V_i are the initial depth of overtopping and the initial velocity of the jet and V_j is the velocity at the location of impact (Equation 11-6):

$$V_j = (V_i^2 + 2gZ)^{1/2} \qquad \text{Eq. 11-6}$$

Where:

Z = the elevation drop from reservoir level to the tailwater pool.

A similar equation (Equation 11-7) can easily be developed for a rectangular jet by applying the continuity principle:

$$t_j = t_i(V_i/V_j) \qquad \text{Eq. 11-7}$$

Where:

t_j = the jet thickness at the point of impact
t_i = the initial brink depth
V_i = initial velocity of the jet

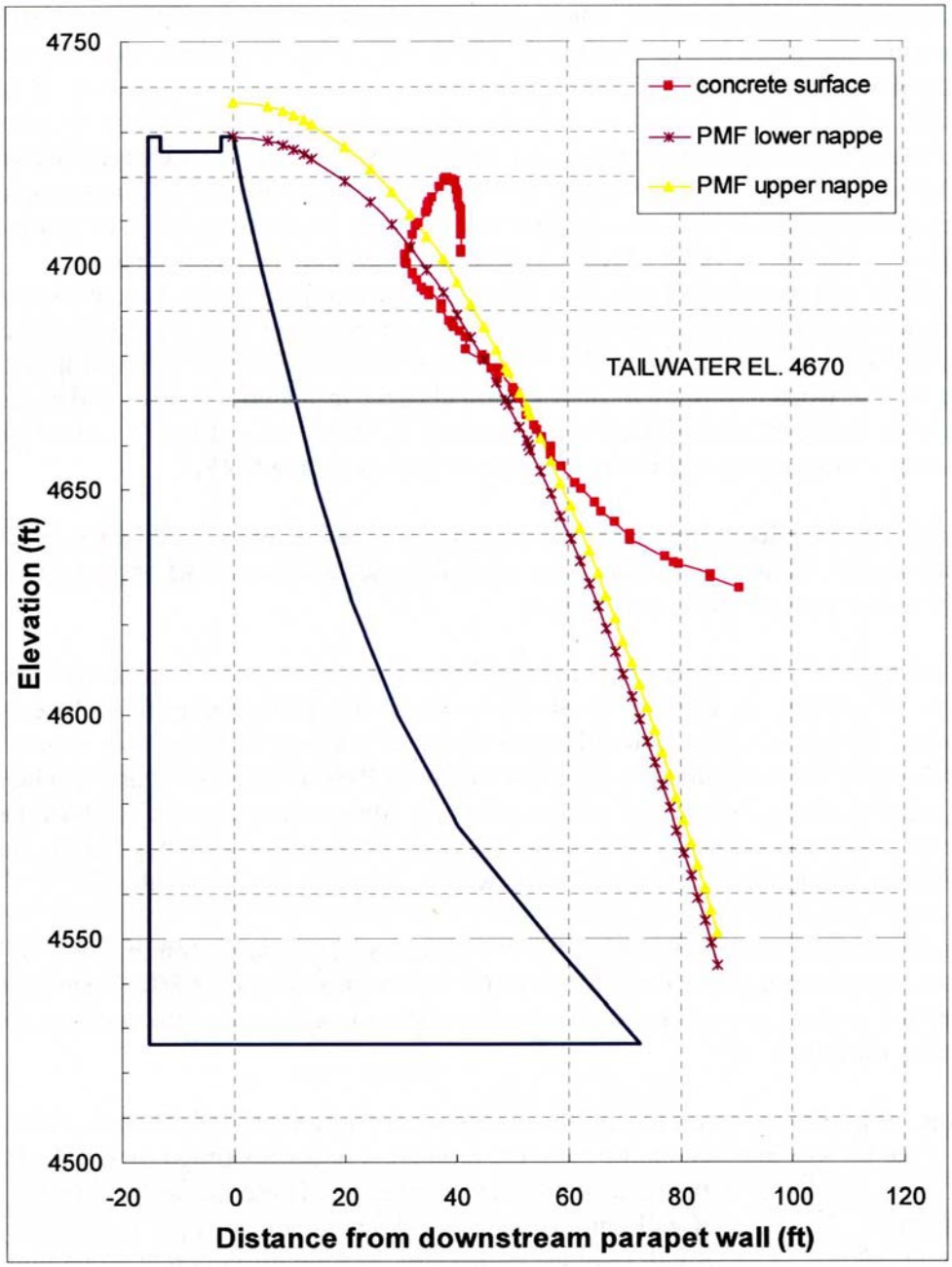

Figure 11-3.—Sectional view of the final trajectory profile for the PMF though a dam section aligned with the river channel (the concrete surface line identifies the downstream edge of the concrete overtopping protection from the upper abutment of the dam down to the maximum section of the dam) (Reclamation 2006).

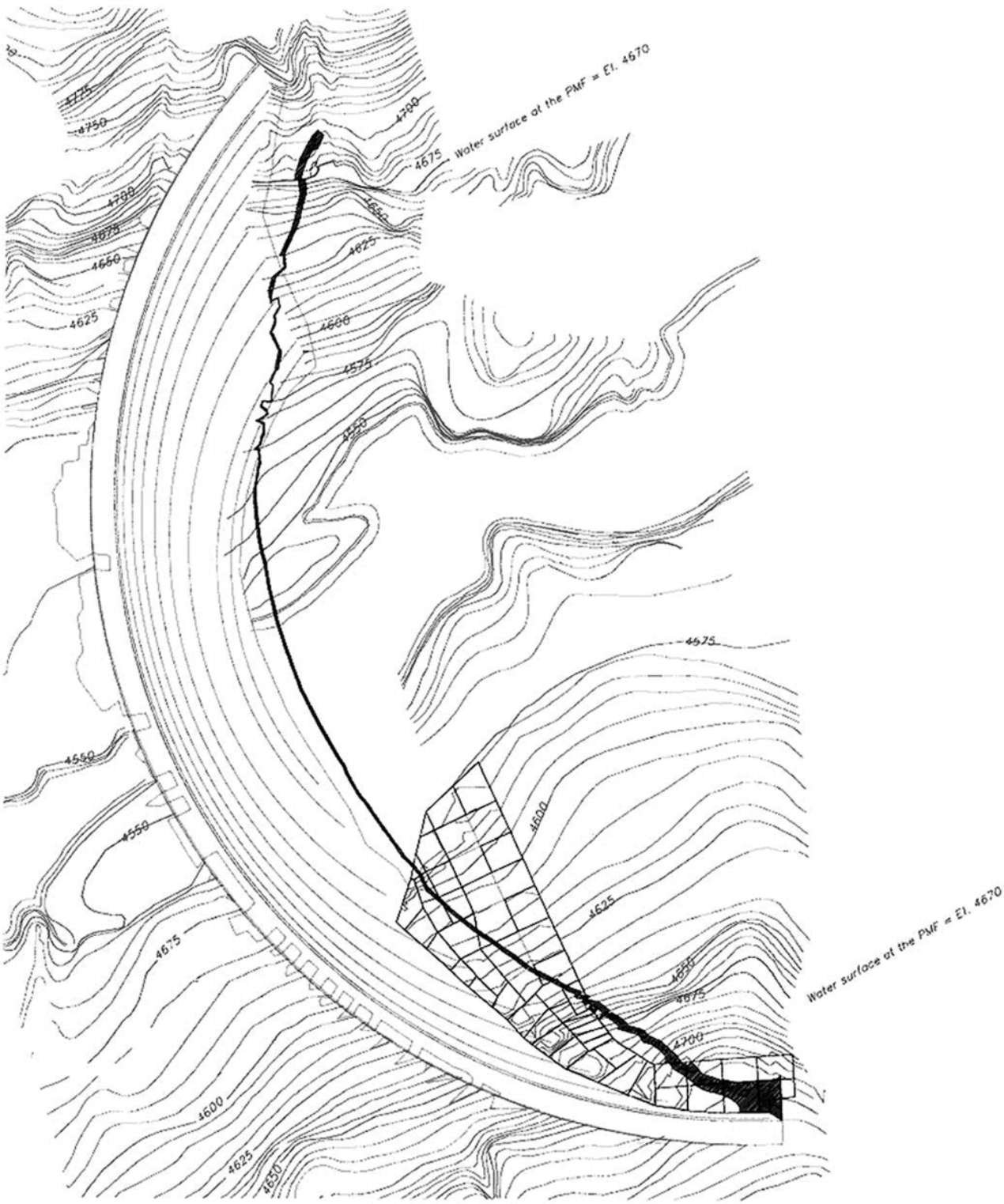

Figure 11-4.—Footprint of the trajectory with no spread of the jet for the PMF overtopping. Note the location of the footprint extends beyond the right abutment protection between contour elevations 4660 and 4710. The tailwater for the PMF is shown on the plan view in blue at Elevation 4670 (Reclamation 2006).

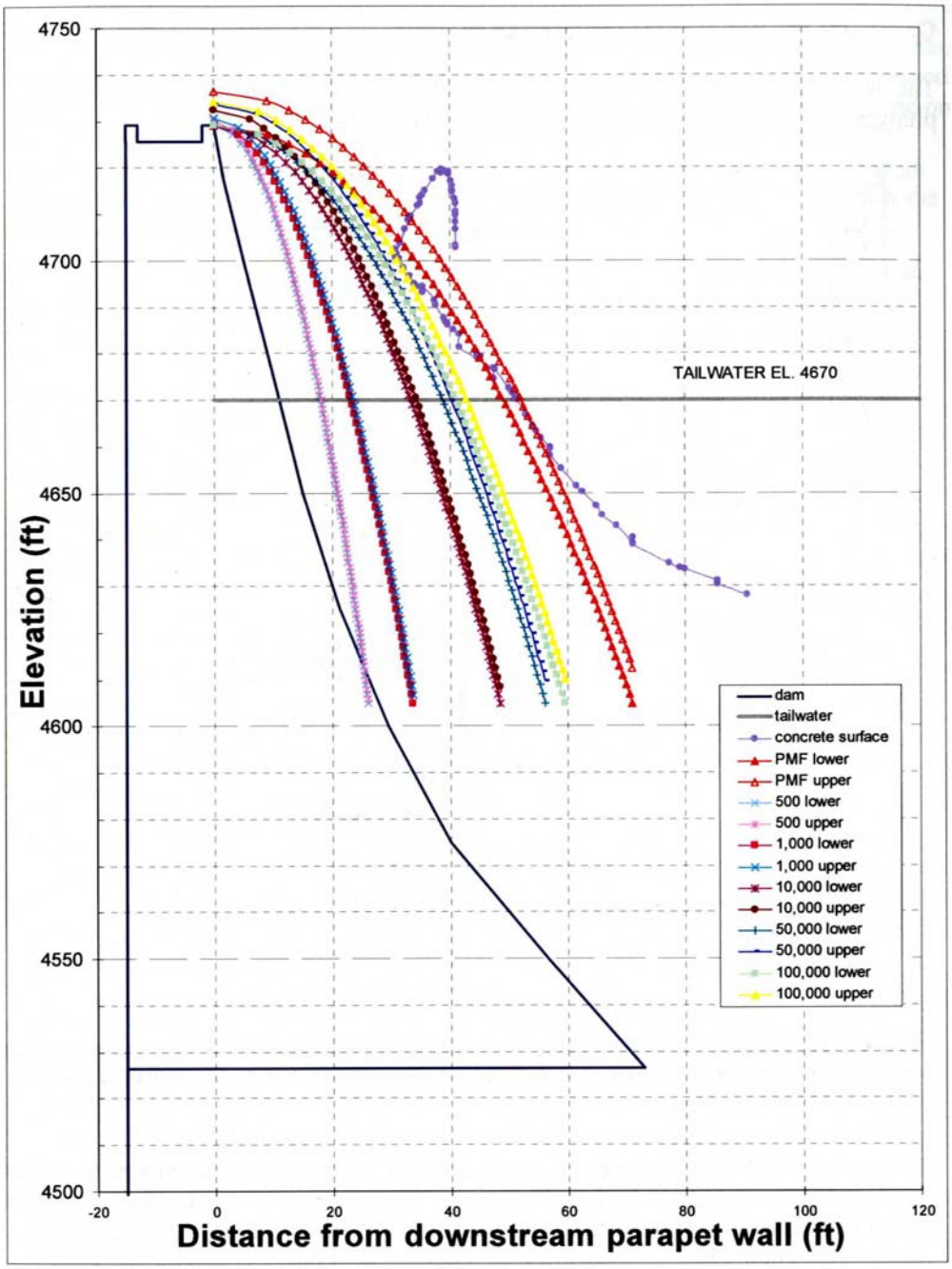

Figure 11-5.—Sectional view of predicted trajectories for various frequency overtopping flood events (the concrete surface line represents the downstream edge of the concrete overtopping protection from the upper abutment to the maximum section of the dam (Reclamation 2006).

Ervine and Falvey (1987) studied circular jets and found that the rate of spread of the outer portion of the jet depends on the turbulence intensity and the distance traveled by the jet through the air. This leads to an equation (Equation 11-8) for the outer diameter D_{out} (Annandale, 2006).

$D_{out} = D_i + 2*0.38(T_u L_j)$ **Eq. 11-8**

Where:

T_u = the turbulence intensity of the jet

L_j = the distance traveled by the jet along the trajectory arc as it falls through the air to the impingement location.

Bollaert (2002) suggests turbulence intensity ranges from 0 to 0.03 for a free overfall condition. L_j, the distance traveled by the jet can be determined from (Equation 11-9):

$$L_j = \int_0^x \sqrt{1 + \left(\frac{dy}{dx}\right)^2}\, dx$$ **Eq. 11-9**

This integration can be performed in closed form for any given horizontal position *x* by making the following substitutions (Equation 11-10):

Let $A = 2Kh_v\cos^2(\theta)$
Let $B = dy/dx = \tan(\theta) - x/A$

Then, $$L_j = \frac{-A}{2}\left[B\sqrt{B^2+1} + ln\left(B + \sqrt{B^2+1}\right)\right]$$ **Eq. 11-10**

The outer spread of the jet can also be calculated by an alternate method developed by Ervine et al. (1997) (Equation 11-11):

$$\varepsilon = \frac{1.14 T_u V_i^2}{g}\left[\sqrt{\frac{2L_j}{t_i Fr_i^2} + 1} - 1\right]$$ **Eq. 11-11**

where Fr_i is the Froude number of the initial jet and V_i is the initial velocity of the jet. Note that this equation was presented in Ervine et al. (1997) using the velocity at the point of jet impact, rather than the initial velocity, but the form shown here is correct. Although this equation was also developed primarily from studies of circular jets, it could be applied to a rectangular jet to calculate the outer dimension, D_{out}, as (Equation 11-12):

$D_{out} = t_i(V_i/V_j) + 2\varepsilon$ **Eq. 11-12**

11.4.3.1 Jet Break Up Length in Free Fall

The following equation (Equation 11-13) developed by Ervine et al. (1997), can be used to determine the length to the expected break-up of a round jet as it falls or travels through the air:

$$C^2 = (1.14T_u Fr_i^2)^2 = \frac{1}{\left(\sqrt{\frac{2L_b}{D_i Fr_i^2}+1}\right)\left(\sqrt{\frac{2L_b}{D_i Fr_i^2}+1}-1\right)^2} \qquad \text{Eq. 11-13}$$

The equations above can be solved for L_b by trial. An appropriate value for the turbulence intensity factor, T_u, for a thick jet overtopping the dam is 0.03.

From experimental data, an alternative equation for calculating the jet break up length for a round jet directly is (Equation 11-14):

$$L_b = \frac{1.05 t_i Fr_i^2}{C^{0.82}} \qquad \text{Eq. 11-14}$$

The following equation (Equation 11-15) by Horeni (1956) is a simplified empirical equation specifically developed to estimate the break-up length for rectangular jets:

$$L_b = 6q^{0.32}, \qquad \text{Eq. 11-15}$$

where q = discharge per unit width

Either of the above two methods should provide reasonable results. If the jet trajectory length exceeds the breakup length, then the energy of the jet can be presumed to be spread over the expanded jet width. If, however, the jet breakup length has not been reached, then the central core of the jet is intact and the energy density of the core will be represented by the jet thickness predicted by the earlier equations that neglected aeration, spreading, and jet breakup.

11.4.3.2 Rectangular Jet Equations

Castillo (2006) developed equations (Equation 11-16 and 11-17) specifically for rectangular jets. He begins by directly estimating a jet thickness at impact, B_g, that considers only the contraction of the jet due to gravitational effects (i.e., no aeration, spreading, or jet breakup).

$$B_g = \frac{q}{\sqrt{2gH}} \qquad \text{Eq. 11-16}$$

Where:

H = the drop height from reservoir pool to tailwater.

The thickness of the jet affected by aeration and spreading is computed as:

$$B_j = B_g + 2\varepsilon$$
$$B_j = B_g + 4\varphi\sqrt{h_o}\left[\sqrt{H} - \sqrt{h_o}\right] \qquad \text{Eq. 11-17}$$

Castillo (2006) suggests h_o should be about 2 times the energy head upstream from the dam crest, whereas Annandale (2006) suggests that h_o be taken as the overflow depth. Frizell (2009) obtained reasonable results using the brink depth in place of h_o. The parameter φ is estimated as (Equation 11-18):

$$\varphi = 1.07T_u \qquad \text{Eq. 11-18}$$

The estimate of T_u=0.03 can be used. Alternatively, Castillo also suggests estimating the turbulence intensity as a function of the unit discharge and the initial conditions at the top of the dam (Equation 11-19):

$$T_u = \frac{q^{0.43}}{\left(\frac{14.95\sqrt{g}}{K^{1.22}C_d^{0.19}}\right)} \qquad \text{Eq. 11-19}$$

Where:

$K \approx$ 0.85
C_d = the discharge coefficient for the dam crest.

This equation requires the use of consistent metric (S.I.) units for the unit discharge, q, and gravitational constant, g. The discharge coefficient must be given in units of $m^{1/2}/s$.

Castillo (2006) also developed an equation for the distance to jet breakup (Equation 11-20):

$$L_b = \frac{0.85 t_i Fr_i^2}{\left(1.07 T_u Fr_i^2\right)^{0.82}} \qquad \text{Eq. 11-20}$$

This equation is similar in form to that suggested by Ervine et al. (1997) from experimental data for circular jets, except that the constant in the numerator will lead to shorter breakup distances for rectangular jets.

11.4.3.3 Jet Plunge Pool Characteristics

For flows discharging into tailwater, there is additional jet spread and core diffusion after the free falling jet enters the pool. The characteristics of a jet as it plunges into and through a plunge pool are shown in Figure 11-6 for the jet entry condition of a highly turbulent jet with very significant aeration and turbulence at the jet boundary. If the jet has not fully broken up in the air, the core of the jet will continue to dissipate or contract in the water; the outside of the jet will also continue to disperse. The streampower density of the overtopping jet will decrease as the jet expands.

To apply Figure 11-6, if the jet retains a core at tailwater impact, that core can be expected to diminish in size at approximately the 8° angle shown (use Equation 11-5 to calculate the inner core thickness at tailwater impact). This will allow estimation of the depth at which the core is dissipated. If the core does not dissipate before the plunge pool floor is reached, then the energy density in the core could be estimated assuming no breakup of the jet (i.e., estimate the impingement area based on just the contraction of the jet due to gravity). If the core is broken up before the boundary is reached, then the impingement area can be estimated assuming the 14° spread of the outer edge of the jet, starting from the estimated spread of the jet in the air (use Equation 11-12 to calculate the outer dimension of the jet at tailwater impact). This impingement area would be used to compute the stream power intensity. Note that Figure 11-6 shows an increased widening rate at some point in the pool, but does not define how to estimate the depth at which this begins. Since the change in spread angle is relatively small, this is probably not an important refinement to include. A 14° spread angle could be assumed for all depths.

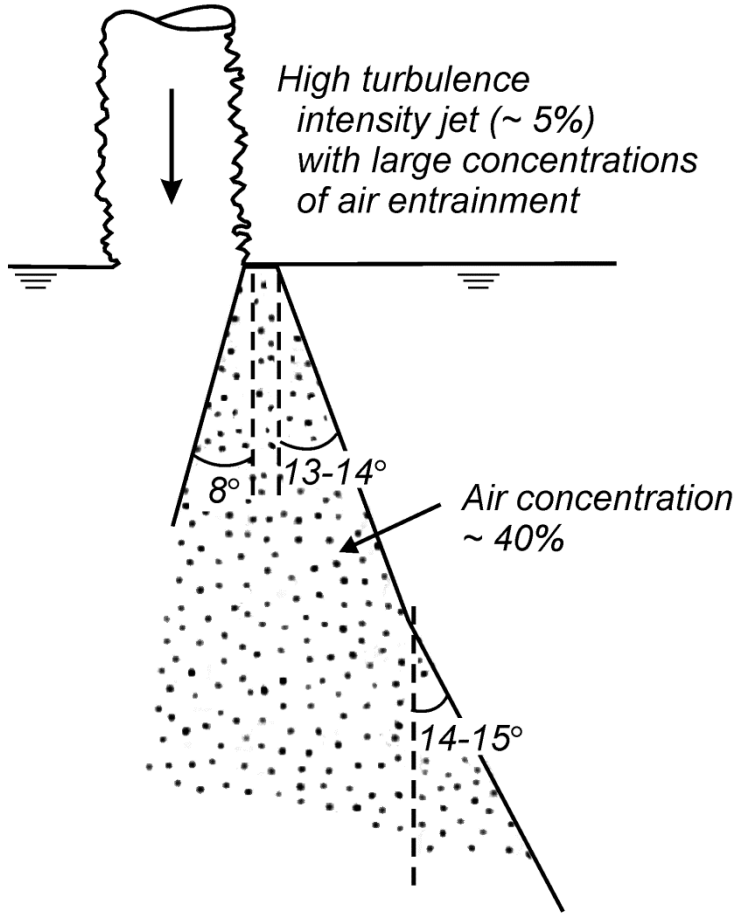

Figure 11-6.—Jet diffusion in a plunge pool for two-phase shear layer and a highly turbulent plunging jet (adapted from Ervine and Falvey, 1987). This case is typical of almost all prototype flows and most model-scale flows.

11.4.4 *Foundation Rock (Erosion Potential)*

The characteristics of the foundation rock will have a major effect on whether or not erosion occurs, and if it does, the extent of the erosion. If the foundation rock is massive with widely spaced discontinuities (e.g., joint, shears, faults, and bedding planes), then erosion will likely be limited because large blocks of rock would have to be moved to initiate erosion. If the rock has closely spaced joints, or large discontinuities in the form of faults or shears, erosion may initiate fairly easily and quickly. The characteristics of joints and other discontinuities will also have an effect on the erodibility of the foundation. Joints that are open and oriented into the flow will allow water pressures to more easily develop on the surfaces of the foundation block.

The potential for rock erosion due to overtopping flows can be evaluated using the stream power-erodibility index method. Chapter 15 describes this method in

detail. Once the jet characteristics have been defined, the potential for scour due to the impinging jet may be determined (Equation 11-21). The scour potential may be quantified by determining the erosive stream power. The stream power is the rate at which energy is applied after the jet has travelled through a vertical distance, Z, to a location on the surface or in a pool.

$$P_{jet} = \gamma QZ \qquad \text{Eq. 11-21}$$

Where:

P_{jet} = the total stream power of the jet
γ = the unit weight of water
Q = the total discharge

The stream power per unit area, A_i, is determined by dividing the total stream power by the footprint of the jet at the point of impact. If the jet has not broken up, the area should be based on the inner core thickness (Equation 11-7). If the jet has broken up, the area should be based on the outer dimension of the jet (Equation 11-12). The stream power per unit area or stream power density of the jet is (Equation 11-22):

$$p_{jet} = \gamma QZ/A_i \qquad \text{Eq. 11-22}$$

and may be used with the threshold curve to determine whether erosion will occur or not as a function of the erodibility of the material or rock. The unit area of the jet changes with the fall both above and below the tailwater.

This approach can also be used to evaluate the ability of concrete overtopping protection to resist the energy of overtopping flows, by calculating an erodibility index for the concrete and comparing it to the streampower of the overtopping flows.

Another consideration for overtopping flows is potential for erosion due to surface flows. For flow down a slope, the rate of energy dissipation (*P*) is a function of the flow depth, flow velocity and the energy slope (Equation 11-23):

$$P = \gamma UhS \qquad \text{Eq. 11-23}$$

Where:

γ = unit weight of water
U = flow velocity
h = water depth
S = hydraulic energy grade line slope

The rate of energy dissipation is small as the flow just comes over the crest and increases as the water velocity increases. The analysis of erosion stability is performed at the location where the value of energy dissipation is the highest. The energy slope is assumed to be approximately equal to the bed slope and flow

depths are taken to be equal to the normal depth computed for steady-state flow conditions.

11.5 *Flow Depth and Duration Factors*

The extent of foundation erosion that may occur due to dam overtopping during a large flood will likely be a function of the depth and duration of dam overtopping. Greater depths of overtopping will increase the energy of overtopping flows and can increase the depth of scour and the rate of headcutting if it occurs. The trajectory of the jet issuing from the top of the dam will be affected by the depth of the overtopping flows, which affects the impact area for the overtopping flows. Duration of the overtopping will also affect the progression of erosion and headcutting. If the duration is limited, to say only a few hours, the extent of the erosion will likely be limited and the erosion of the dam foundation may not be able to progress to the point of leading to dam failure.

11.5.1 *Flood Routing Results*

Flood routings are needed to determine the depth and duration of dam overtopping during floods. It is often valuable to perform flood routings for a suite of frequency floods. This information can be used for a risk analysis or can be used to judge the potential for erosion to develop during different frequency floods. The flood routings provide depth and durations of dam overtopping for a given flood. Sensitivity studies that evaluate the effects of non-ideal conditions should be considered when performing flood routings. Conditions to evaluate are discussed in more detail below.

11.5.2 *Uncertainties Associated with Reservoir and/or Gate Operation*

The assumptions made regarding reservoir operations for flood routing studies should be evaluated for reasonableness. The Standing Operating Procedures (SOP) for a given dam may require that the spillway gates be opened in direct response to increasing inflows, but if the gate openings dictated by this operation would exceed the safe channel capacity and flood homes and endanger downstream residents, there may be a reluctance to pursue an aggressive release schedule on the part of the dam operator. Assuming a delay in making critical decisions on gate operations (such as the point where downstream populations are dramatically affected) is a way to test the sensitivity of the flood routing results to the flood operations.

Another issue to consider with spillway gates is the potential for one or more of the gates to malfunction during a major flood. Gates can malfunction for a number of reasons including failure of the hoist mechanism, failure of the wire ropes or chains that lift the gates, binding of the gates due to pier deflections or expansions, power failure, or access limitations. This can be simulated by

eliminating the discharge capacity of one or more of the gates during the flood routing to test the vulnerability of the operations to this type of failure.

11.5.3 *Uncertainties Associated with Spillway Discharge*

Spillway discharges assumed in flood routings are often based on idealized discharge curves. If the spillway discharge curve was not based on a site-specific hydraulic model study, and the approach conditions to the spillway are less than ideal, consideration should be given to the impact that this may have in reducing the predicted discharge. Another consideration is the potential for reservoir debris to clog the spillway crest during a large flood and restrict spillway discharges. Sensitivity routings can be performed to evaluate these potential effects. For gated spillways, discharge conditions can vary from free flow to orifice flow depending on the gate opening and the reservoir water surface. This should be accounted for in the routings.

11.6 *Types of Concrete Dam Overtopping Protection*

If it is determined that the potential for failure of a concrete dam is significant and that there is justification to pursue actions to mitigate this potential, there are a number of different types of overtopping protection that can be provided. Generally, overtopping protection for concrete dams must be very robust, since the systems must be capable of withstanding the impact of concentrated jets overtopping the dam that may have a significant fall height. Overtopping protection systems that will be discussed for concrete dams include:

- RCC overlays
- Conventional or mass concrete overlays
- Rock reinforcement
- Tailwater

These systems can be used as single elements or can be combined. The different systems are discussed in detail in:

- Chapter 12 (Roller-Compacted Concrete)
- Chapter 13 (Conventional or Mass Concrete)
- Chapter 14 (Foundation and Abutment Reinforcing)
- Chapter 15 (Tailwater Effects)

11.7 *General Design Considerations*

Once it is decided that flood overtopping of a concrete dam must be mitigated, there are some general design considerations that will apply to any type of overtopping protection. These considerations are presented below:

- ***Current Hydrologic Loadings***.—If overtopping protection is being pursued, it is important to have current hydrologic loadings available for the designs. If the overtopping protection is being designed for PMF flows, it should be verified that the PMF is current. If a risk-informed approach is used to select the IDF, a hydrologic hazard study will either need to be developed or updated to provide information on a range of frequency floods. If outdated information is used, there is a chance that the overtopping protection will be under-designed (possibly leading to failure of the dam for extreme events) or overdesigned (resulting in an overly costly design that is not efficient).

- ***Flood Routing Results***.—Flood routings will be necessary to evaluate the depths and durations of dam overtopping during floods of interest. In some cases a critical flood, such as the PMF, will be the only flood that is evaluated. In other cases, a suite of frequency floods may be used to help determine the extent of flood overtopping protection that is necessary. Routing of frequency floods will be needed if a risk analysis is used as part of the design process. This will require a hydrologic hazard analysis (which will establish relationships between flood frequency and peak flood flows or flood volumes) and developing frequency flood hydrographs.

- ***Trajectory of Overtopping Flows***.—Using the flood routing information, the trajectory of jets issuing from flows that overtop the dam can be predicted. This will be needed to determine which portions of the foundation will be impacted directly from overtopping flows. Predictions of the flow paths, depths, and lateral extent will also be needed for the overtopping flows that collect along the downstream abutment and flow to the river channel. The extent of the direct impact flows and the surface flows will need to be defined to determine which foundation discontinuities and potential foundation blocks will be subjected to pressures and possible erosion from these flows. Splitter piers may be needed on the crest of the dam to aerate overtopping flows and prevent negative pressures from pulling the jet toward the dam, when the dam crest lengths are long.

- ***Depth and Duration and Impacts on Potential Failure.***—The depth and duration of overtopping flows will be important to determine, as this will help determine the level of protection needed. This information will be useful in assessing the potential for significant scour depths to develop and the potential for headcutting, once scour initiates.

- ***Tailwater Depths***.—Tailwater depths will be important to determine for a range of overtopping flows. Tailwater will serve to dissipate the energy of overtopping flows and a determination of the depths and extent of tailwater will be needed to determine if and where overtopping protection may be needed.

- ***Hydraulic Model Studies.***—Hydraulic model studies can be very useful in designing overtopping protection systems for concrete dams. The models can be either physical models or numerical models. The models have the ability to capture three-dimensional effects which may be critical to successfully designing the overtopping protection. A two dimensional study will be able to predict the jet trajectory and impact area of overtopping flows at various locations along the dam axis, but the effect of flows impacting and then collecting and flowing down the downstream groin cannot be easily captured. A three dimensional model study will allow this behavior to be evaluated.

- ***Streampower/Erodibility Index Method***.—This method can be used to determine if erosion is likely to occur and also to estimate the vertical extent of the erosion, if it initiates. This information can be used to determine if overtopping protection is necessary and if so to what extent. Erosion from the impingement of overtopping flows on the foundation and from the surface flows that collect and travel down the abutments to the river channel should be considered. A detailed presentation of this method is provided in Chapter 15.

11.8 *Vulnerabilities*

Overtopping protection can improve the ability of a dam foundation to withstand overtopping flows but overtopping protection is not foolproof. The protection may not be effective in certain situations.

11.8.1 *Inadequate Extent of Protection*

To be cost effective, overtopping protection of dam foundations must be targeted to those areas of the foundation likely to experience erosive flows. If the overtopping protection is designed for a specific flood and a related depth of overtopping but a larger flood occurs, the impinging jet from overtopping flows may extend beyond the overtopping protection. It may also be the case that the

streampower of overtopping flows increases substantially for larger events and that this is sufficient to cause unacceptable erosion. When evaluating overtopping protection that is already in place, a determination of the design level of the protection should be made and an assessment of the adequacy of the protection for larger flood events should be considered. If a determination is made that the design flood level needs to be updated (possibly because of increased downstream populations and increased risk or if the original design flood has become more frequent due to updated hydrologic studies) and if it is concluded that the existing protection is inadequate for the new design level, an extension of the protection may need to be considered.

11.8.2 *Deterioration of Overtopping Protection or Scheme*

Overtopping protection that is installed may deteriorate over time. If the overtopping protection consists of rock reinforcement, such as rock bolts or rock anchors, the reinforcing steel may corrode if adequate corrosion protection has not been provided. Even if corrosion is very localized, it has the potential to reduce the cross sectional area of the reinforcement and significantly reduce the capacity of the reinforcement. If the overtopping protection consists of concrete or RCC overlays on the dam foundation, the concrete may deteriorate due to alkali-aggregate reaction or freeze-thaw damage. If concrete or RCC overlays are damaged due to deterioration, the protection could fail during a flood overtopping event and expose the foundation to overtopping flows. If overtopping protection does exist at a dam, it is important to review the design considerations for the protection, to determine if it is still adequate. The physical condition of the overtopping protection should also be determined from an inspection and any observed deterioration should be considered when evaluating the design adequacy of the protection.

11.8.3 Erosion Downstream from Overtopping Protection

Overtopping protection can be defeated if erosion occurs downstream from the protection and the protection is undermined due to headcutting. It is important to identify the areas of the foundation that will be exposed to erosive flows and determine if erosion of non-protected areas is likely. If there is the potential for erosion downstream from the protected areas, consideration should be given to extending the erosion protection.

11.8.4 *Exceeding Design Discharge*

If discharges occur that exceed the design discharge for the overtopping protection, the protection may be compromised. This could occur as a result of a change in the hydrologic hazard characterization, the result of plugged or otherwise inoperable spillways or simply from the occurrence of an extremely remotely possible flood event.

11.8.5 *Loss of or Miscalculated Tailwater*

Tailwater may be a consideration in the design of concrete overlays as overtopping protection. The tailwater may limit the areas that require protection or may reduce the thickness and/or extent of the concrete overlays. If the tailwater depths that were assumed in the design do not develop (due to a change in downstream conditions or from a miscalculation in the tailwater study) the existing overtopping protection may be compromised for larger flows.

Chapter 12. Roller-Compacted Concrete

Potential concerns for overtopping of concrete or masonry dams generally involve blocky or erodible abutments or foundations, rather than concerns for the structure itself. In these cases, overtopping protection may be required for the exposed abutments and foundation within the impact zone of the overtopping flow, to prevent the loss of materials and undermining of the dam which could otherwise result in instability and failure. Alternatively, higher hydrostatic loads on concrete or masonry dams resulting from the passage of a flood event could produce lower factors of safety for sliding at a lift line within the body of the dam, at the dam-foundation contact, or along a potential slide plane within the foundation. The most common use of RCC for overtopping protection of a concrete or masonry dam is to provide a massive buttress for the structure to improve sliding stability. RCC may also be used to protect the dam foundation from erosion and headcutting from an impinging jet, but would not lend itself to the protection of steep abutments.

12.1 *Historical Perspective*

Reclamation has constructed RCC buttresses for a straight masonry gravity dam (e.g., Camp Dyer Diversion Dam in Arizona), for a curved concrete arch dam (e.g., Santa Cruz Dam in New Mexico), and for a concrete overflow spillway structure (e.g., Pueblo Dam in Colorado). In each case, RCC was placed in horizontal lifts along the downstream face of the existing structure to improve the stability of the structure for the design loads.

Camp Dyer Diversion Dam was completed in 1926 as a masonry and concrete gravity structure, and impounds a small reservoir (Lower Lake) for the diversion of irrigation releases to Beardsley Canal. The main dam had a 613-foot crest length and a maximum structural height of 75 feet. A smaller concrete gravity dike to the right had a 263-foot crest length and a maximum structural height of 25 feet. The dam and dike are located on the Agua Fria River, approximately 35 miles northwest of Phoenix, Arizona, and less than 1 mile downstream from Reclamation's New Waddell Dam. Outlet releases to the Agua Fria River from New Waddell Dam which exceed the capacity of the canal would overtop the dam and dike crest. The construction of New Waddell Dam reduced the storage capacity of Lower Lake. In 1988, Reclamation agreed to increase the height of Camp Dyer Diversion Dam by 3.9 feet to maintain the original storage capacity of the lake for potential peaking power development by the dam owner. The modified structure was to meet all Reclamation criteria for static and dynamic stability to ensure continued diversion releases and sufficient tailwater for operation of the river outlet works at New Waddell Dam. A concrete buttress was

required for the downstream face of the dam and dike to increase the dead load and sliding resistance of the modified structure. RCC was selected over conventional concrete for its relative economy and ease of construction. Construction was completed in 1992 (Figure 12-1). The structure performed well during overtopping in 1993 (Figure 12-2). Details of this modification can be found in Hepler (1982).

Figure 12-1.—Completed RCC buttress at downstream face of Camp Dyer Diversion Dam in Arizona. Conventional concrete was used for the overflow crest and approach apron. The stepped surface provides energy dissipation for overtopping flows (Reclamation).

Figure 12-2.—RCC buttress for Camp Dyer Diversion Dam during overtopping in January 1993 (Reclamation).

Santa Cruz Dam is a cyclopean concrete arch dam located about 25 miles north of Santa Fe, New Mexico on the Santa Cruz River. The dam was completed in 1929 with a height of 150 feet, a crest length of 500 feet, and a radius of 300 feet. The dam had safety concerns related to the maximum credible earthquake (MCE) and the PMF, and was experiencing severe concrete deterioration due to freeze-thaw. An RCC buttress was constructed on the downstream face of the dam to address the seismic concerns related to the MCE, and the entire dam crest was designed for overtopping to address the hydrologic concerns related to the PMF (see Figures 12-3 and 12-4). Completed in 1990, the Santa Cruz Dam modification was the first RCC project to use an air-entraining admixture to improve freeze-thaw durability. Details of this modification can be found in Metcalf et al (1992).

Figure 12-3.—Concrete overtopping protection for Santa Cruz Dam in New Mexico. Splitter piers were provided for overtopping of the entire dam crest (Reclamation).

Figure 12-4.—Service spillway flows confined by training walls on stepped downstream face of Santa Cruz Dam (Reclamation).

Pueblo Dam is a composite concrete and earthfill structure located on the Arkansas River, 6 miles west of Pueblo, Colorado, and was completed in 1975. The concrete section consists of 23 massive-head buttresses and has a structural height of approximately 245 feet to the lowest point in the foundation with a total crest length of 1,750 feet. The earthfill sections consist of the left and right embankments totaling 8,480 feet in length. The spillway, within the central concrete section, consists of a 550-foot-wide uncontrolled ogee crest, with downstream training walls, a flip bucket energy dissipator, and a 550-foot-wide plunge pool at the downstream toe. The original plunge pool was 80 feet long, with an invert approximately 31 feet below the spillway outlet channel and 45 feet below the dam buttress foundation.

Dam safety modifications were completed in 1998 to reduce the potential for sliding failure of the spillway foundation under static and hydrologic loads. The modifications included the construction of a 20-foot-thick (vertical dimension) RCC plug within the original plunge pool (Figure 12-5), and a 45-foot-thick (horizontal dimension) RCC toe block against the upstream stilling basin apron (Figure 12-6). High strength rock bolts were used to reduce the tensile stresses that could develop in the RCC toe block, and to provide additional active resistance across the assumed foundation failure surface. The exposed RCC

surfaces were capped using conventional reinforced concrete, and concrete impact blocks were provided to improve stilling basin performance. The large RCC placement was expected to crack as it contracted during cooling. Concrete cracking was controlled by installing vertical contraction joints in the RCC at specified intervals (based on predicted RCC temperatures and joint openings using thermal analyses) and grouting the open contraction joints. Details of this modification can be found in Reclamation (2002).

Figure 12-5.—RCC buttress construction within the original spillway plunge pool for Pueblo Dam in Colorado (Reclamation).

Figure 12-6.—Mechanical anchors being installed through the RCC toe block into the foundation for Pueblo Dam spillway, to improve sliding resistance (Reclamation).

12.2 *Design and Analysis*

Methods to determine the dam overtopping depths and durations for design floods, the corresponding trajectory and downstream impact zone of overtopping flows, the resulting impact forces and potential for foundation erosion and scour, and tailwater considerations are discussed in Chapter 11. The RCC overlay or buttress for a concrete or masonry dam must be sized to meet the design requirements, either to provide sufficient coverage for overtopping protection of a weak foundation, or additional resistance to potential sliding of the dam or foundation. RCC placements should be at least 20 feet wide to provide for the passage of standard construction equipment, although narrower placements may be possible, as discussed in Chapter 2.

- ***Camp Dyer Diversion Dam.***—A minimum RCC buttress width of 20 feet, with an 0.8:1 downstream slope, was selected for Camp Dyer Diversion Dam to accommodate two lanes of construction traffic on the RCC lifts for both the dam and dike sections (Figure 12-7). This was larger than that required by analysis to provide a minimum sliding factor of safety of 3.0. A conventional concrete block having a vertical downstream face was used within the narrow river channel at the maximum section of the dam to facilitate construction and reduce the overall concrete volume. The RCC buttresses were capped by a conventional, reinforced concrete apron and ogee overflow crest to improve hydraulic performance. Although the conventional concrete had joints every 25 feet, no joints were specified for the RCC.

  The downstream face of the overflow crest and RCC buttress included 1-foot high formed steps for energy dissipation of the maximum 2-foot-deep overtopping flow. The hard rhyolite bedrock at the downstream toe was sufficiently erosion resistant so that a concrete apron or terminal structure was not required. Pressure grouting of the existing masonry dam was required prior to buttress construction to improve its structural integrity and reduce reservoir seepage. Any remaining seepage would be collected by a series of vertical flat drains spaced on 10-foot-centers at the dam/buttress contact. Surface treatment at the dam/buttress contact consisted of cleaning using a high-pressure water jet, and the placement of conventional leveling concrete ahead of the RCC. No mechanical anchorage was used for the RCC buttress.

Figure 12-7.—RCC buttress being constructed at downstream face of Camp Dyer Diversion Dam. Width of RCC placement is sufficient for passing construction equipment. Note flat drains on contact surface between dam and buttress. (Reclamation)

Figure 12-8.—RCC placements followed curvature of existing arch dam, Santa Cruz Dam (Reclamation).

- ***Santa Cruz Dam.***—The RCC buttress for Santa Cruz Dam maintained the curvature of the existing arch dam, and provided 2-foot-high steps on the downstream face for energy dissipation of overtopping flows (Figure 12-8). The stilling basin at the downstream toe was designed assuming a 75 percent reduction of the total energy resulting from the steps. The design requirements for the RCC included a minimum compressive strength of 3,000 lb/in^2 at 1 year, cohesion between the RCC and existing concrete dam of 50 lb/in^2 at 1 year, and freeze-thaw durability of 500 cycles (ASTM C666). The use of an air-entraining admixture significantly improved the freeze-thaw durability. Leveling concrete was used around the perimeter of the RCC placement, so that adequate bond would be obtained with the existing dam concrete surface. No mechanical anchorage was provided at the RCC buttress/dam contact.

- ***Pueblo Dam.***—For the design of the Pueblo Dam buttress, Reclamation originally assumed a cohesion value of 290 lb/in^2 (based on 85 percent of the surface being bonded) and a friction angle of 45 degrees for the RCC lift lines, based on the proposed RCC mix design. However, the Consultant Review Board (CRB) suggested that a safety factor of 3.0 be applied with cohesion, ultimately resulting in a design cohesion value of 90 lb/in^2. The CRB also suggested a safety factor of 1.5 be applied for use of the friction angle without cohesion, resulting in a value of 30 degrees.

  The final designs used the safety factors for the potential foundation sliding surfaces that were reinforced by RCC and rock bolts, based on the CRB recommendations. Mechanical anchorage for the RCC toe block consisted of rock bolts placed through the apron. The rock bolts were double corrosion protected, and consisted of 1-$^3/_8$ -inch-diameter high strength bars, grouted into polyethylene sheaths. Drainage pipes were provided beneath the stilling basin floor to relieve potential uplift pressures. Contraction joints were provided in both longitudinal and transverse directions for crack control. Design and construction considerations for RCC can be found in Reclamation (2005b).

12.3 *Construction Considerations*

General construction considerations for RCC buttresses are similar to those for other types of RCC construction, including RCC mix design, batching, transportation, placing, spreading, compaction, and curing (Reclamation, 2005b). RCC buttresses for a concrete or masonry dam will not require upstream forming. However, they will require special surface preparation and treatment for the upstream contact surface, which may consist of cleaning using a high-pressure water jet, and the use of conventional leveling concrete or grout-enriched RCC to ensure bond between the RCC and the existing concrete or masonry surface.

Extensive testing was performed by Reclamation for the conventional concrete overlay for the modification of Theodore Roosevelt Dam in Arizona to demonstrate the effectiveness of these treatment methods, without the requirement of mechanical anchorage. Grouting of the existing dam may be necessary to reduce potential seepage at the contact surface, and the installation of a drainage system at the contact surface may be necessary to ensure that potential future seepage can be collected and drained (as was required for Camp Dyer Diversion Dam).

The stepped downstream face for an RCC buttress subjected to overtopping flows may be constructed using standard forms with steel pins and custom brackets, with external bracing as required. Flat strap tiebacks were used on the upper lifts of the dike buttress for Camp Dyer Diversion Dam. RCC was hand shoveled against the forms to minimize segregation and rock pockets, and compacted by a power tamper and plate vibrator. Surface repairs were generally not required following form removal. If the buttress is constructed against a sloping dam face, the buttress width may be fairly constant and may affect RCC construction for the full height of the placement. When the RCC placements became 15 to 25 feet wide at Santa Cruz Dam, a crane with a 2-yd^3 bucket was used to place concrete.

Some of the main concerns during construction of the Pueblo Dam buttress and toe block included the quality of RCC lift lines in the stilling basin area, the compaction of RCC in the sloping toe block, finish tolerances of the sloping portion of the conventional concrete overlay for spillway flows, and installation of the mechanical anchorage. Pull-out tests indicated that some of the rock bolts did not meet specification requirements due to manufacturing problems and had to be replaced. Core testing was performed after construction for evaluating lift line integrity, which raised concerns related to RCC lift line bond strength. It is believed that some damage occurred below the lift lines when construction traffic was allowed on the compacted lift surface approximately one day after placement.

A weak, somewhat porous zone within 2 inches below the lift surface was identified in the cores taken from the RCC in the stilling basin. The lift surfaces were also suspected of being too dry when the subsequent lift was placed due to windy conditions at the site. The rounded aggregates and a lower paste content used in the RCC mix may also have contributed to the problem. However, it was finally concluded that the lift lines and the weak zones beneath the lift lines would provide adequate strength for sliding resistance of the structure.

12.4 *Vulnerabilities and Risk*

The RCC buttress for Camp Dyer Diversion Dam was overtopped within 8 months of completion when a large flood event occurred in January 1993 during the first filling of New Waddell Dam. The ogee crest and stepped downstream face performed as designed with no reports of damage to the modified structure.

Potential failure modes for RCC overtopping protection for a concrete or masonry dam could include:

- Undermining of the downstream end of the RCC protection due to inadequate energy dissipation resulting in erosion or scour within the outlet channel
- Inadequate coverage of RCC protection, resulting in erosion or scour of the foundation due to impact from the overtopping flow
- Deterioration or cracking of the RCC protection, resulting from poor compaction, freeze-thaw damage, or thermal stresses
- Inadequate bond at lift surfaces, resulting in insufficient sliding resistance.

Proper design and construction methods should ensure that these or other potential failure modes do not represent an unacceptable risk to the completed structure.

Chapter 13. Conventional or Mass Concrete

13.1 *General*

Conventional or mass concrete can be used to provide overtopping protection in the form of concrete overlays that protect the underlying rock foundation at the downstream toe of the dam and along the downstream abutment. The overlays protect the rock from overtopping flows that could pluck rock blocks from the rock foundation or that could scour and remove material along shears or faults within the dam foundation. Splitter piers are often used in conjunction with concrete overlay overtopping protection to aerate the overtopping flow jet and prevent it from being pulled close to the toe of the dam (see Figures 13-1 and 13-2). Concrete overlays can protect the foundation from impinging flows or from overtopping flows that collect and flow down the groin of the dam to the river channel (see Figures 13-3 and 13-4). In addition to providing concrete overlays to protect the foundation, concrete walls are often constructed to contain overtopping flows and direct them to the downstream river channel (see Figure 13-5). Concrete overlays can be constructed of either conventional or mass concrete. Conventional concrete overlays are thinner (2 to 2.5 feet thick), are continuously reinforced to ensure structural integrity, generally have MSA of 1½ inches or less, and typically have a 28-day compressive strength of at least 4,000 lb/in^2.

Mass concrete is defined as any large volume of concrete cast-in-place, generally as a monolithic structure. Dimensions of the structure are of such magnitude that measures must be taken to cope with the generation of heat and the resulting volume changes and cracking. Mass concrete may not be reinforced (and if so, the reinforcement may only be temperature steel to control concrete cracking); maximum aggregate size may approach 6 inches or more; and thicker placements would typically be used (greater than 3 feet). A typical mass concrete mix may have a design of 3,000 lb/in^2 at one year.

13.2 *Historical Perspective*

Reinforced concrete overlays have been provided at a number of concrete dams to protect the foundation from overtopping flows. Five examples are provided below. Detailed descriptions of the modifications are provided in the Appendix.

- ***Gibson Dam.***—Gibson Dam is a thick concrete arch dam on the North Fork of the Sun River near Augusta, Montana. Modifications to Gibson Dam were completed in 1981 to provide protection for overtopping flows that would result in up to 12 feet of overtopping over the parapet walls on the dam crest. The overtopping protection consisted of groutable rock

bolts to reinforce and stabilize jointed rock in the abutments and placement of concrete caps on both abutments. The overtopping protection on the right abutment was more extensive than on the left abutment, because the rock was judged to be more erodible on the right side. The reinforced concrete overlays had a minimum thickness of 2.5 feet. Figures 13-1 to 13-5 are of Gibson Dam.

Figure 13-1.—Crest of concrete dam with splitter piers for overtopping flows (Reclamation).

Figure 13-2.—Splitter piers designed to aerate overtopping flows (Reclamation).

Figure 13-3.—Concrete overtopping protection at downstream toe of dam (Reclamation).

Figure 13-4.—Concrete overtopping protection at downstream toe of dam (Reclamation).

Figure 13-5.—Concrete channel using guide wall to convey overtopping flows (USACE republished in Zaitsoff, 2003).

- ***Railroad Canyon Dam***.—Railroad Canyon Dam is a concrete arch dam on the San Jacinto River in Riverside County, California. Overtopping protection for the dam was constructed in 1995. The overtopping protection consisted of reinforced concrete overlays with rock anchors on the downstream portions of the abutments. The reinforced concrete overlays were 24 inches thick.

- ***Coolidge Dam***.—Coolidge Dam is a multiple domed concrete dam on the Gila River about 10 miles downstream of Peridot, Arizona. Extensive reinforced concrete overlays were provided on the downstream abutments at Coolidge Dam as part of an overtopping protection design. The overlays had a minimum thickness of 2.5 feet and were designed to resist the static uplift due to seepage through the abutments during dam overtopping, dynamic uplift and dynamic impact during dam overtopping and temperature loads. Flat drains and anchor bars were provided to help resist uplift. Control joints with waterstops at 20-foot spacings each way were provided to limit the number and minimize the size of temperature and shrinkage cracks.

- ***Boundary Dam***.—Boundary Dam is a thin concrete arch dam on the Pend Oreille River in northeast Washington, about a mile south of the Canadian border. The dam was modified in the 1990s to provide overtopping protection on the downstream portion of the dam abutments. A reinforced concrete slab was provided on the flatter upper portions of the abutments but shotcrete reinforced with welded wire mesh was used to protect the steeper portions of the abutments (shotcrete placements may be a good alternative to conventional concrete when slopes are steep and conventional concrete forming and placing is not practical).

- ***Tygart Dam***.—Tygart Dam is a concrete gravity dam on the Tygart River in the northern part of West Virginia. The dam was modified in the 1990s to provide overtopping protection at the downstream toe of the dam. A reinforced concrete slab and guidewalls were provided to protect the toe and to direct the overtopping flows to an existing stilling basin.

13.3 *Design and Analysis*

A number of elements need to be considered when designing conventional or mass concrete overtopping protection for concrete dams. These elements include:

- ***Geologic Mapping and Joint Surveys***.—Geologic mapping and joint surveys are needed to define the surface geology of the dam abutments and foundation and to characterize discontinuities in the foundation, which could form potentially removable foundation blocks. Guidance on performing geologic mapping and rock joint surveys can be found in Reclamation (1998).

- ***Coring of Rock Foundations and Testing of Discontinuities***.—If removable foundation blocks exist, a coring and testing program of the foundation rock will be helpful in characterizing the continuity and characteristics of the discontinuities and in estimating the shear strength along the discontinuities.

- ***Flood Hydrology***.—If a major modification is being pursued at a dam, such as adding overtopping protection, the flood hydrology for the damsite should be reviewed and updated as necessary. This will ensure that the modification is being designed for the most up to date loading information.

  A decision should be made on the inflow design flood or the level of protection that will be designed for. Guidance for the evaluation of the hydrologic safety of dams, including guidelines for determination of the IDF for both new and existing dams, is provided by FEMA's new manual, *Selecting and Accommodating Inflow Design Floods for Dams* (FEMA

2013). A risk-informed approach can be used to make these design determinations (Reclamation, 2013b).

- ***Flood Routing Results***.—Flood routings will be necessary to evaluate the depths and durations of dam overtopping during floods of interest. In some cases, a critical flood, such as the PMF, will be the only flood that is evaluated. In other cases, a suite of frequency floods may be used to help determine the extent of flood overtopping protection needed. A suite of frequency floods will be needed if a risk analysis is used as part of the design process and will require a hydrologic hazard analysis (which will establish relationships between flood frequency and peak flood flows or flood volumes) and the development of frequency flood hydrographs (Reclamation and USACE, 2013).

- ***Tailwater Studies***.—Tailwater studies are important to define the depths and extent of tailwater during overtopping flows. Tailwater will dissipate the energy of overtopping flows and may reduce the extent of required overtopping protection.

- ***Trajectory of Overtopping Flows***.—Using the flood routing information, the trajectory of jets issuing from flows that overtop the dam can be predicted. This will be needed to determine which portions of the foundation will be impacted directly from overtopping flows. Predictions of the flow paths, depths, and lateral extent will also be needed for the overtopping flows that collect along the downstream abutment and flow to the river channel. The extent of the direct impact flows and the collected flows will need to be defined to identify which foundation discontinuities and potential foundation blocks will be subjected to pressures and possible erosion from these flows. Chapter 11 provides a detailed discussion on predicting the trajectory, configuration and energy related to overtopping flows.

- ***Depth and Duration and Impacts on Potential Failure***.—The depth and duration of overtopping flows will be important to determine the level of protection needed. This information will be useful in assessing the potential for significant scour depths to develop and the potential for headcutting, once scour initiates.

- ***Hydraulic Model Studies***.—Hydraulic model studies can be very useful in designing overtopping protection systems for concrete dams. The models can be either physical models or numerical models. The models have the ability to capture three-dimensional effects which may be critical to successfully designing the overtopping protection. While a two-dimensional numerical study will be able to predict the jet trajectory and impact area of overtopping flows at various locations along the dam axis, the effect of flows impacting and then collecting and flowing along the

downstream groin can not be easily captured. A three-dimensional model study will allow this behavior to be evaluated.

- ***Streampower/Erodibility Index Method***.—This method can be used to determine if erosion is likely to occur and also to estimate the vertical extent of the erosion, if it initiates. This information can be used to determine if overtopping protection is necessary and if so to what extent. Even if this approach indicates that the erosion will not undermine the dam, there is the possibility that scour downstream of the dam may allow removable blocks to daylight. If concrete erosion protection is in place or being evaluated, the erodibility index of the concrete can be calculated and compared to the streampower introduced by overtopping flows. This comparison can be used to evaluate whether the concrete protection will be adequate. For competent concrete with reasonable strength (3,000 to 4,000 lb/in^2), the range of erodibility indices would typically be 4,000 to 5,500. A detailed presentation of this method is provided in Chapter 15.

Concrete overlays should be designed to protect the foundation from erosion and prevent uplift pressure from seepage of water under the slab or into the foundation. Slab thickness and reinforcement requirements will be dependent on the loading conditions identified and the structural design. The minimum overlay thickness used has generally been 2 to 2.5 feet. For thinner slabs, typically placed with conventional concrete, the slab will typically be continuously reinforced to control cracking, with waterstops provided at control joints (joints where concrete bond is prevented to allow for contraction and expansion of the slab but which includes steel reinforcement extending across the joint). For thicker mass concrete placements, temperature reinforcement at the exposed surface of the slab may be considered to control surface cracking.

To control cracking through the thickness of the concrete mass due to shrinkage of the concrete, contraction joints (joints that prevent concrete bond but allow for contraction and expansion of the concrete) should be provided. Contraction joints and control joints are typically spaced from 30 to 50 feet apart. Geologic units with differing properties may require special treatment to minimize shear stresses in the slab.

A foundation drainage system should be provided below the slab to prevent development of uplift pressures. Drain outlets should be located and designed to prevent the introduction of foundation pressures from impinging overtopping flows. Rock bolts and or anchor bars may be provided to ensure the concrete protective slab remains firmly attached to the foundation. If rock bolts or anchor bars are provided, consideration should be given to the potential corrosion of these elements.

Corrosion protection can be provided by:

- Grouting the perimeter of the rock anchor holes to prevent groundwater access to the anchors,
- Providing an encapsulation to seal the anchor within the borehole and prevent contact with groundwater, and/or,
- Providing epoxy coating on the anchors or rock bolts.

For more guidance on corrosion protection systems, refer to the Post-Tensioning Institute, Recommendations for Prestressed Rock and Soil Anchors (2004).

When protection is planned for steep abutment slopes, shotcrete can be considered in lieu of concrete overlays. The shotcrete can be installed more easily under these conditions and will prevent forming issues with conventional concrete on steep slopes.

Overtopping of a concrete dam can be controlled by adjusting the top of dam or top of parapet wall elevations. The effective top of dam can be raised near the abutments (or lowered at the center of the dam) to allow for overtopping (at least initially) only in the center of the dam and not on the abutments. Doing so will reduce the portion of the crest of the dam that is overtopped, but will allow for tailwater and/or overtopping protection to accommodate focused overtopping flows. Such a scheme could allow for controlled overtopping up to a certain return period flood but complete overtopping of the dam crest for more remote floods.

Overtopping protection for concrete dams should be designed for the following loads:

- ***Impinging jet load.***—Impact loads from impinging jets may induce compressive, shear and bending stresses in protective slabs. Impact pressures may be estimated on foundation areas without tailwater using the Bernoulli equation, and converting the static head to a pressure head. Flow aeration and reducing the angle of impingement will reduce the actual pressure on the foundation. Chapter 11 provides details on identifying impact areas and calculating the jet area and the pressures on impacted areas.
- ***Uplift due to impinging jet.***—Impinging jets entering open joints in the foundation or open cracks in a protective slab may develop local uplift pressures equal to the full energy head if the foundation is not adequately drained.
- ***Steady-state uplift.***—Seepage under the reservoir head will produce an uplift pressure distribution between the upstream face of the dam and the

downstream end of the protective slab. The protective slab should be designed to resist the maximum loads from the uplift pressure distribution—but generally not less than 10 feet of design head. Uplift pressures can be determined from seepage models calibrated to available instrumentation data. For preliminary designs or final designs, where limited information exists, uplift pressures may be assumed to vary uniformly between the:

- Upstream face, using full reservoir head
- Drainage gallery, using tailwater head plus the difference between the reservoir and tailwater heads multiplied by a drainage effectiveness factor
- Downstream end of the protective slab, using full tailwater head

The drainage effectiveness factor is usually taken as one-third to one-half, depending on the quality of the drains and their accessibility for periodic maintenance.

Designs for overtopping protection systems for concrete dams should provide for redundancy, depending on the duration of the event. Overtopping of only a few hours would require minimal redundancy, while overtopping flows of several days would require greater redundancy to avoid potential failure. The design should provide for uplift resistance and drainage, and make the foundation materials act as a single unit. The following protective features should be considered: a protective concrete slab to resist the impact of overtopping flows and establish a smooth flow surface and prevent seepage into the foundation, a drainage system below the protective concrete slab, and anchor bars to tie the protective concrete slab into the foundation.

The design details of the concrete overtopping protection will be important. For thinner conventional concrete slabs, reinforcement should be designed to resist moments and shears from uplift pressures. For mass concrete placements, structural reinforcement may not be necessary, but reinforcement at exposed surfaces should be considered to minimize surface cracking.

Control or contraction joints should also be included for concrete overtopping protection to minimize the extent of cracking in the concrete. The joint details will be important to ensure the integrity of the overtopping protection and to prevent the development of stagnation pressures at the concrete joints. Stagnation pressures typically develop for thinner slabs at joints with an offset into the flow that are oriented transverse to the direction of flow. Design details can mitigate against the development of stagnation pressures for thinner slabs and include:

- Waterstops (to prevent water infiltration through the joints)
- Joint details to minimize the chance of the downstream portion of the joint from raising relative to the upstream portion of the joint
- Rock bolts and/or anchor bars (to anchor the concrete protection to the foundation and provide additional stability)
- Drainage under the overtopping protection (to reduce uplift pressures and improve stability of concrete protection)
- Continuous reinforcement across the joint (to provide additional resistance and stability across overtopping protection slabs)

Training walls are often provided to channel overtopping flows to the downstream tailwater pool and prevent overtopping flows from flowing on unprotected portions of the downstream foundation. The walls should be designed to contain the anticipated depths of overtopping flows and the impact from the overtopping flows. Water surface profiles can be used to estimate flow depths along the downstream groins of the dam. When concentrated flows are collected and confined in a channel, energy dissipation of the flows being discharged into the downstream river channel may need to be considered (either relying on an existing stilling basin or ensuring that a plunge pool exists to dissipate flows).

13.4 *Construction Considerations*

When concrete overlays are placed on the downstream foundation areas, the foundation will need to be prepared for concrete placement. This will involve removing loose and weathered foundation materials so that a sound surface can be achieved. In the process of foundation cleanup, weak zones in the foundation may be uncovered that may require additional treatment or require that the foundation protection be extended further. If faults or shears are encountered, this weak material should be removed to an acceptable depth and replaced with backfill concrete. For areas just beyond the extent of the concrete overlay, the foundation should be mapped and an assessment made as to whether the condition of the unprotected foundation is as expected. If a determination is made that the foundation is not as competent as expected and if the unprotected portions of the foundation will be exposed to potentially erosive flows, consideration should be given to extending the concrete overlays.

13.5 *Vulnerabilities and Risk*

Concrete overlays can be very effective in protecting portions of the dam foundation exposed to overtopping flows by sealing the surface of the foundation

and preventing high velocity flow from entering joints and fractures in the rock and initiating plucking of the foundation rock. To be effective, the overlays will need to extend over the areas impacted from overtopping flows and the collective flows which travel down the groin of the dam (which will change with the depth of overtopping flows and will be a function of the flood magnitude) and will need to remain intact during large flood events and be able to withstand the environmental conditions. Hydraulic studies of the overtopping flows will be needed to ensure that the coverage of the overlays is adequate. Good quality control measures during foundation preparation and concrete placement and regular inspections of installed concrete overlays will be needed to ensure that the overlays are capable of withstanding overtopping flows.

- ***Updated frequency floods.***—This may result in a change of flood magnitude for the design return period. This change in magnitude may result in overtopping flows impacting beyond the concrete overtopping protection, with the potential for erosion to initiate. If the design flood return period must be maintained to ensure acceptable risks for potential failure modes related to the dam foundation eroding during flood events, then additional overtopping protection may be needed.

- ***Weathering or deterioration of concrete protection.***—If good quality concrete is initially provided, the concrete should be durable and able to withstand the elements. If localized damage occurs, then repairs should be considered, especially if the damage has exposed reinforcing steel that could deteriorate if left exposed or if cracking exists which could lead to breakup and removal of the concrete protection. If damage to the overtopping protection concrete is extensive, then an assessment will have to be made on the ability of the overtopping protection to function as intended. In some cases, the overtopping protection concrete may have to be replaced.

- ***Plugging of drainage system.***—Drainage systems can become plugged over time due to calcium carbonate, iron bacteria, migration of sands and gravels in the dam foundation, or from other mechanisms. The drainage system should ideally be designed to allow access for an inspection camera, so that the condition of the underdrain system can be periodically checked. This may require designing a number of access points into the drainage system where a camera can be inserted. Drain flows should be at least visually monitored and if drain flows have visibly decreased, a camera inspection should be initiated. If drains are plugged, drain cleaning should be initiated. For guidance on monitoring, inspecting and cleaning underdrain systems, see Reclamation (2004).

- ***Inaccurate prediction of jet trajectory.***—A potential issue with concrete overtopping protection is that the trajectory of the overtopping flows may be estimated incorrectly. These inaccurate predictions could be due to the

lack of a hydraulic model study. If the jet impinges further downstream than predicted and impacts on unprotected foundation, erosion may initiate. The design calculations should be reviewed to confirm that the approach used and assumptions made are valid. During dam overtopping, the flow characteristics of overtopping discharges should be documented and compared to design calculations.

Chapter 14. Foundation and Abutment Reinforcing

Foundation and abutment reinforcing can be an effective means of stabilizing rock masses against overtopping flow. In many cases, this reinforcing will be most effective if combined with concrete overlays. Without overlays, the joints and discontinuities that form wedges in the rock mass will be subjected to potentially large dynamic pressures and impact loads from the overtopping flows. Figures 14-1 through 14-3 show some examples of typical removable foundation blocks.

14.1 *Historical Perspective*

Foundation and abutment reinforcing has been provided at a number of concrete dams to stabilize foundation and abutment rock blocks for static and seismic loading. A less common reason for stabilizing rock blocks has been to improve stability during flood overtopping flows. Several dams have been modified for this reason and three examples are provided below Detailed write-ups of these case histories can be found in the Appendix.

- ***Gibson Dam.***—Gibson Dam is a thick concrete arch dam on the North Fork of the Sun River near Augusta, Montana. Modifications to Gibson Dam were completed in 1981 to provide overtopping protection for overtopping flows that would result in up to 12 feet of overtopping over the parapet walls on the dam crest. The overtopping protection consisted of groutable rock bolts to reinforce and stabilize jointed rock in the abutments and placement of concrete caps on both abutments. The overtopping protection on the right abutment was more extensive than on the left abutment, because the rock was judged to be more erodible on the right side. Rock bolt spacings and rock bolt lengths were not well documented, but Figure 14-4 indicates that the rock bolting was extensive. The rock on the left abutment of the dam was not judged to be erodible, except for two weaker beds. Pairs of anchor bars at 5-foot spacings were provided on each side of the beds. The anchor bars extended 5 feet into rock and were grouted in place.

- ***Railroad Canyon Dam.***—Railroad Canyon Dam is a concrete arch dam on the San Jacinto River in Riverside County, California. Overtopping protection for the dam was constructed in 1995. The overtopping protection consisted of reinforced concrete overlays with rock anchors on the downstream portions of the abutments. Details on the rock anchor spacings and lengths are not available.

- ***Boundary Dam***.—Boundary Dam is a thin concrete arch dam on the Pend Oreille River in northeast Washington, about one mile south of the Canadian border. Overtopping protection was provided on the downstream abutments in the 1990s. A hydraulic model study was conducted to determine a number of parameters, including: the trajectory of overtopping flows, the impingement areas on the abutments, and the hydrodynamic forces on the abutments during impingement. Erosion protection included reinforced concrete slabs on the upper abutments, with rock bolts to anchor the concrete slabs (No. 8 fully grouted 10-foot long bolts) to the foundation.

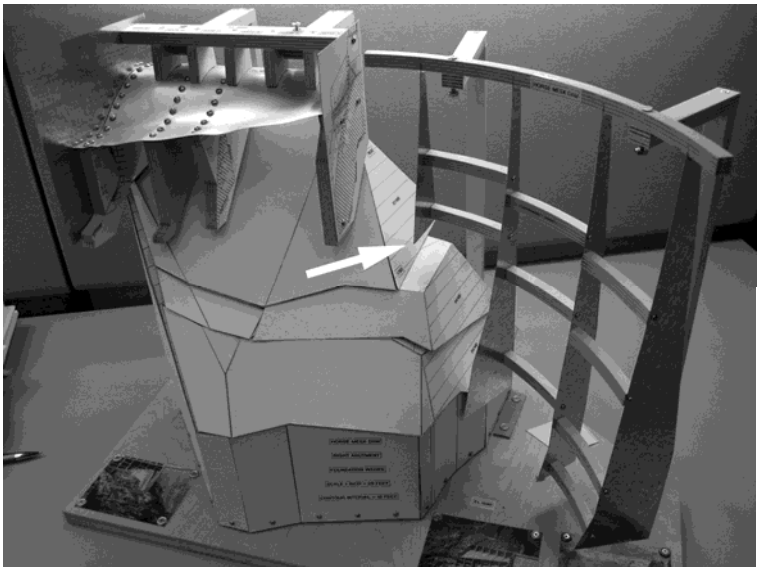

Figure 14-1.— Nested foundation blocks, view from downstream (Reclamation)

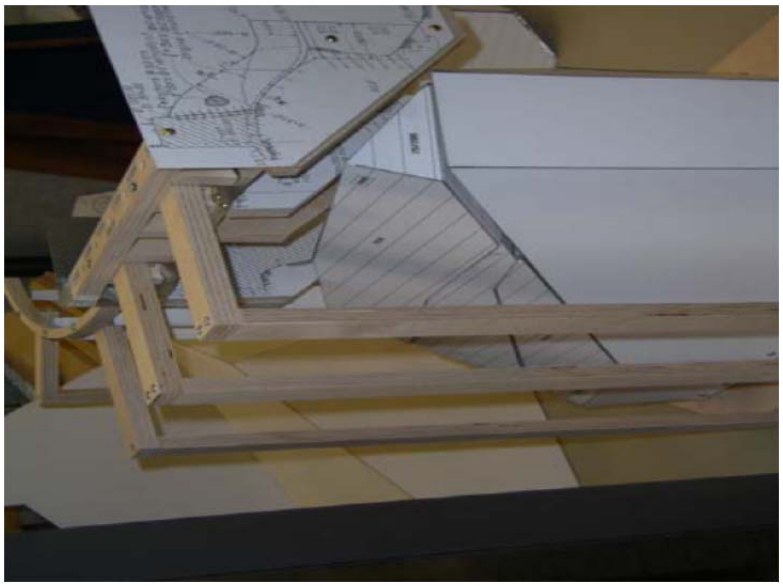

Figure 14-2.— Nested foundation blocks, view from upstream (Reclamation)

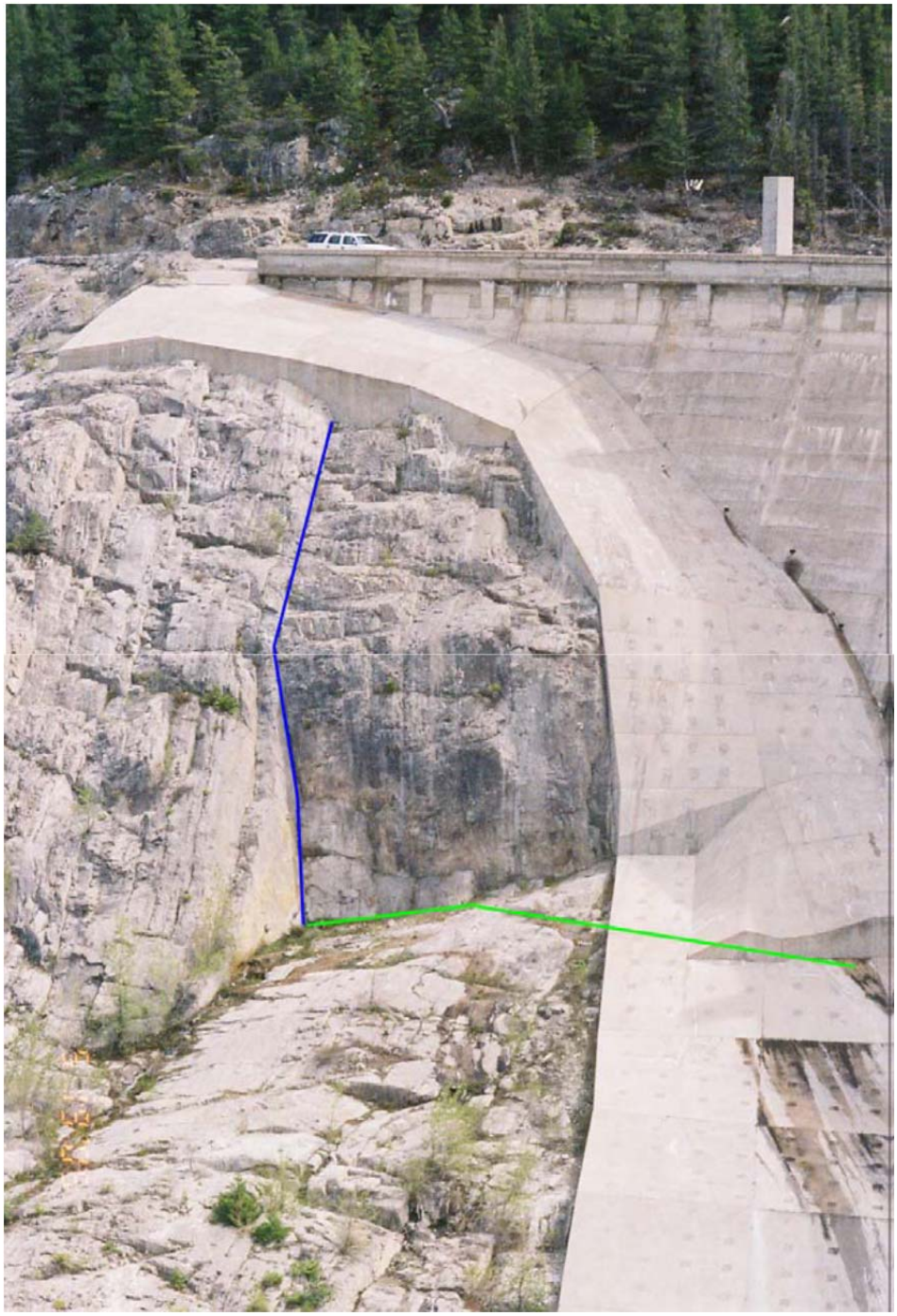

Figure 14-3.—Example of removable rock block in dam foundation. Photograph of the right abutment as seen from the left abutment. Blue line indicates the approximate location of the side plane and the green line indicates the approximate location of the base plane. The side plane extends under the concrete cap and dam until intersecting the release plane. (Reclamation).

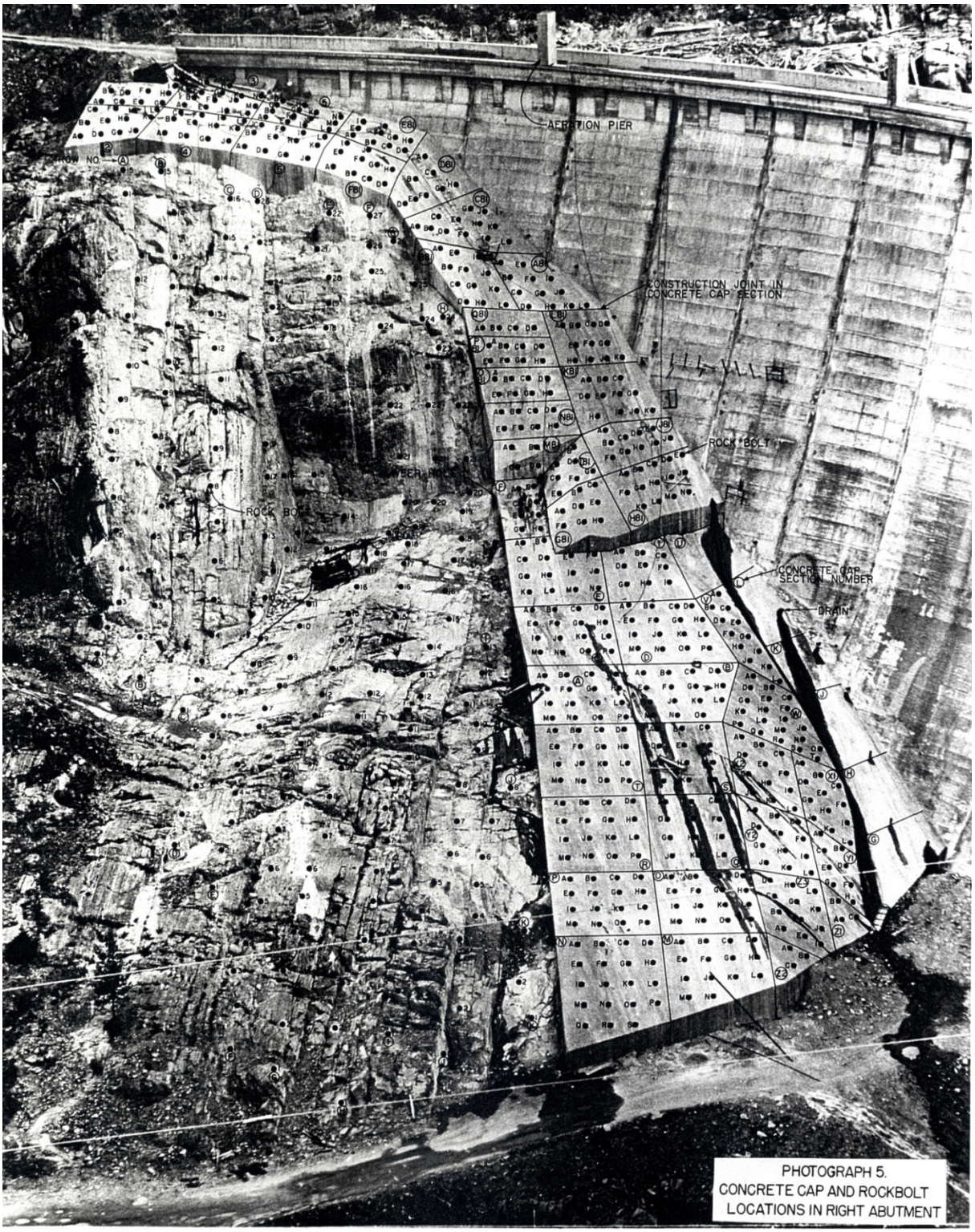

Figure 14-4.—Rock Bolt Installation on Downstream Abutment as Part of Overtopping Protection (Reclamation)

14.2 *Design and Analysis*

A number of elements need to be considered when designing conventional or mass concrete overtopping protection for concrete dams. These elements include:

- ***Geologic Mapping and Joint Surveys.***—Geologic mapping and joint surveys are needed to define the surface geology of the dam abutments and foundation and to characterize discontinuities in the foundation, which could form potentially removable foundation blocks. Guidance on performing geologic mapping and rock joint surveys can be found in Reclamation (1998).

- ***Coring of Rock Foundations and Testing of Discontinuities.***—If removable foundation blocks exist, a coring and testing program of the foundation rock will be helpful in characterizing the continuity and characteristics of the discontinuities and in estimating the shear strength along the discontinuities.

- ***Flood Hydrology.***—If a major modification is being pursued at a dam, such as adding overtopping protection, the flood hydrology for the damsite should be reviewed and updated as necessary. This will ensure that the modification is being designed for the most up to date loading information. A decision should be made on the inflow design flood or the level of protection that will be designed for. Guidance for the evaluation of the hydrologic safety of dams, including guidelines for determination of the IDF for both new and existing dams, is provided by FEMA's manual, *Selecting and Accommodating Inflow Design Floods for Dams* (FEMA, 2013). A risk-informed approach can be used to make these design determinations (Reclamation 2013b).

- ***Flood Routing Results.***—Flood routings will be necessary to evaluate the depths and durations of dam overtopping during floods of interest. In some cases, a critical flood, such as the PMF, will be the only flood that is evaluated. In other cases, a suite of frequency floods may be used to help determine the extent of flood overtopping protection that is necessary. A suite of frequency floods will be needed if a risk analysis is used as part of the design process and will require a hydrologic hazard analysis (which will establish relationships between flood frequency and peak flood flows or flood volumes) and the development of frequency flood hydrographs (Reclamation and USACE, 2013).

- ***Tailwater Studies.***—Tailwater studies are important to define the depths and extent of tailwater during overtopping flows. Tailwater will dissipate the energy of overtopping flows and may reduce the extent of required

overtopping protection. Refer to Chapter 15 for a discussion of tailwater plunge pool technologies.

- ***Trajectory of Overtopping Flows.***—Using the flood routing information, the trajectory of jets issuing from flows that overtop the dam can be predicted. This will be needed to determine which portions of the foundation will be impacted directly from overtopping flows. Predictions of the flow paths, depths and lateral extent will also be needed for the overtopping flows that collect along the downstream abutment and flow to the river channel. The extent of the direct impact flows and the collected flows will need to be defined to determine which foundation discontinuities and potential foundation blocks will be subjected to pressures and possible erosion from these flows.

- ***Depth and Duration and Impacts on Potential Failures.***—The depth and duration of overtopping flows will be important to determine the level of protection needed. This information will be useful in assessing the potential for significant scour depths to develop and the potential for headcutting, once scour initiates.

- ***Hydraulic Model Studies.***—Hydraulic model studies can be very useful in designing overtopping protection systems for concrete dams. The models can be either physical models or numerical models. The models have the ability to capture three-dimensional effects which may be critical to successfully designing the overtopping protection. While a two-dimensional study will be able to predict the jet trajectory and impact area of overtopping flows at various locations along the dam axis, but the effect of flows impacting and then collecting and flowing along the downstream groin can not be easily captured. A-three dimensional model study will allow this behavior to be evaluated.

- ***Streampower/Erodibility Index Method.***—This method can be used to determine if erosion is likely to occur and also to estimate the vertical extent of the erosion, if it initiates. This information can be used to determine if overtopping protection is necessary and if so to what extent. Foundation blocks may be eroded as a result of overtopping flows that impinge on the foundation directly or as a result of flows that collect and travel down the abutment to the stream channel. Even if this approach indicates that the erosion will not undermine the dam, there is the possibility that scour downstream of the dam may allow removable blocks to daylight. A detailed presentation of this method is provided in Chapter 15.

- ***Foundation Sliding Stability Analysis.***—If removable foundation blocks exist, their stability should be evaluated for flood overtopping conditions. The evaluation of foundation block stability should consider the potential

for the removal of some of the downstream foundation due to scour. Details on performing foundation stability analyses can be found in Scott (1999).

Overtopping of a concrete dam can be controlled by adjusting the top of dam or top of parapet wall elevations. The effective top of dam can be raised near the abutments (or lowered at the center of the dam) to allow for overtopping (at least initially) only in the center of the dam and not on the abutments. Doing so will reduce the crest of the dam that is overtopped, but will allow for tailwater and/or overtopping protection to accommodate focused overtopping flows. Such a scheme could allow for controlled overtopping up to a certain return period flood but complete overtopping of the dam crest for more remote floods.

When evaluating the foundation for overtopping flows, the concentration of overtopping flows along the abutments should be considered in addition to the effect of impinging flows on the foundation. As overtopping flows travel from the upper abutments to the tailwater in the downstream river channel, flows will accumulate and the streampower and energy in the flow will increase.

Protecting anchors from corrosion is an important design consideration. Corrosion protection can be provided in a variety of ways. In general, some form of corrosion protection should be provided and higher levels of corrosion protection should be considered if the anchors are installed in a corrosive environment or if the anchors are critical to the stability of the foundation and/or the dam. Corrosion protection can be provided by:

- Grouting the perimeter of the rock anchor holes to prevent groundwater access to the anchors,
- Providing an encapsulation to seal the anchor within the borehole and prevent contact with groundwater, and/or,
- Providing epoxy coating on the anchors or rock bolts (see Figure 14-5).

For more guidance on corrosion protection systems, refer to the Post-Tensioning Institute, *Recommendations for Prestressed Rock and Soil Anchors* (2004).

Figure 14-5.—Epoxy coated rock bolts (Reclamation).

Rock reinforcement overtopping protection for concrete dams should be designed for the following loads:

- ***Impinging jet load***—Impact loads from impinging jets will introduce pressures on and into the dam foundation. Impact pressures may be estimated on foundation areas without tailwater using the Bernoulli equation, converting the static head to a pressure head. Flow aeration and reducing the angle of impingement will reduce the actual pressure on the foundation. For additional discussion, see Chapter 11.

- ***Uplift due to impinging jets***.—Impinging jets entering open joints in the foundation may develop local uplift pressures equal to the full reservoir head if the foundation is not adequately drained.

- ***Steady-state uplift***.—Seepage under reservoir head will produce an uplift pressure distribution between the upstream and downstream ends of the dam. Uplift pressures can be determined from seepage models calibrated to available instrumentation data. For preliminary designs or final designs, where limited information is available, uplift pressures may be assumed to vary uniformly between the:

- Upstream face, using full reservoir head
- Drainage gallery, using tailwater head plus the difference between the reservoir and tailwater heads multiplied by a drainage effectiveness factor
- Downstream end of the protective slab, using full tailwater head.

The drainage effectiveness factor is usually taken as one-third to one-half, depending on the quality of the drains and their accessibility for periodic maintenance.

- ***Dam Loads***.—For analysis of foundation blocks underneath the dam, dam loads into the foundation will be needed. This is usually obtained from an uncoupled analysis of the dam.

14.3 *Construction Considerations*

A number of factors should be considered when installing rock reinforcement for overtopping protection of concrete dams. These include:

- ***Adjustment of anchor depths/spacing based on site conditions***.—Rock anchors stabilize a rock mass by reinforcing the rock and providing a compressive force to hold the mass together and can be used to stabilize individual rock wedges by anchoring the wedge to the adjacent rock mass. When drilling holes for rock bolts, it may become apparent that key rock joints are at different orientations or spacings than was anticipated. It may be necessary to extend the length of rock bolts to provide adequate anchorage for the rock bolts and/or to extend the rock bolt anchors beyond planes that form rock blocks. Locations of rock joints within the rock mass should be identified before installing rock bolts and adjustments should be made to the rock bolt lengths, if necessary.

- ***Documentation of foundation conditions during construction***.—It is important to verify foundation conditions in terms of joint orientation and spacing and rock mass quality during construction. The conditions should be documented in the form of geologic maps and logs of drill holes for the rock anchors. If conditions are different than was anticipated, then the design assumptions should be reviewed and if necessary the planned rock reinforcement should be adjusted.

- ***Ability to verify performance of reinforcement over time.***—This may be difficult to achieve but should be considered in the design.

Figure 14-4 shows the installation of rock bolts as part of an overtopping protection modification.

14.4 *Vulnerabilities and Risk*

There are a number of vulnerabilities and risks which can reduce the effectiveness of rock reinforcement and possibly lead to the initiation of a potential failure mode.

- ***Deterioration of anchors over time.***—Rock bolts or rock anchors can deteriorate over time. The biggest concern is that corrosion will occur somewhere along the rock bolt or anchor and the anchor will lose cross sectional area and the structural capacity of the anchor will be reduced.

- ***Insufficient extent of rock anchoring.***—Rock bolt reinforcement must protect the critical portions of the foundation that may be vulnerable to erosion from overtopping flows or vulnerable to large dynamic pressures from overtopping flows. Erosion or dynamic pressures can lead to foundation block displacement. If critical foundation areas are unprotected, foundation erosion may initiate and be allowed to progress.

- ***Daylighting of foundation planes caused by foundation erosion from spillway or overtopping flows.***—This may or may not have been considered in the original design. As foundation conditions change, foundation stability should be reevaluated.

- ***Removal of passive resistance provided by downstream foundation blocks.***—This is a similar consideration from the previous bullet, and this removal could lead to a condition that may need to be reevaluated in terms of foundation stability.

- ***Stagnation pressures or stagnation pressures on blocks.***—Flows traveling along the surface of the foundation may be injected into joints and other discontinuities and create high water pressures within the foundation. This can occur if vertical offsets occur into the flow. If these situations exist, this should be considered in the foundation stability analysis. Insight into the potential for the development of stagnation pressures can be found in a research report from Reclamation (2007). In this research, a variety of crack configurations in concrete slabs were evaluated (with the crack width, offset at the crack and crack geometries (rounded vs sharp corners)) and the corresponding stagnation pressures and flow volumes were measured.

- ***Reinforcement not extending deep enough (not beyond block planes).***—If rock reinforcement is installed and the location and orientations of discontinuities are not verified during drilling of rock reinforcement holes (from coring or downhole cameras), then the extent of the rock reinforcement may be inadequate to stabilize blocks.

- ***Plugging of foundation drains.***—Foundation drains can become plugged over time due to calcium carbonate, iron bacteria, migration of sands and gravels in the dam foundation, hole caving, or other mechanisms. The foundation drains should ideally be designed to allow access for an inspection camera, so that the condition of the drains can be periodically checked. Drain flows should be at least visually monitored. If drain flows have visibly decreased, a camera inspection should be initiated. If drains are plugged, drain cleaning should normally be initiated. For guidance on monitoring, inspecting and cleaning foundation drains, see Reclamation (2004).

- ***Inaccurate prediction of jet trajectory.***—A potential issue with concrete overtopping protection is that the trajectory of the overtopping flows may be estimated incorrectly (either due to inadequate or improper analysis or due to a lack of a hydraulic model study). If the jet impinges at a different location than what was predicted and impacts blocks that have not been stabilized with reinforcement, erosion may initiate. The design calculations should be reviewed to confirm that the approach used and assumptions made are still valid. During dam overtopping, the flow characteristics of overtopping discharges should be documented and compared to design calculations.

Chapter 15. Tailwater Effects

This chapter describes the hydraulics of a free-falling jet from concrete dam overtopping into a plunge pool of rock material. The jet will either impinge into the pool below the dam and disperse into the pool before impinging on the rock surface or it will not disperse. If the jet will disperse because of adequate tailwater pool depth, then no energy remains to erode the rock material on the sides or base of the pool. If not, then scour may occur, depending upon the rock materials. If scour is predicted and is determined by the designer to be unacceptable, a protective measure, such as a downstream weir may be constructed artificially raise the tailwater pool depth and prevent scour at the toe of the dam.

Tailwater effects should be a consideration when evaluating a concrete dam for overtopping flows. Even without any special design measures in place, tailwater will help dissipate the energy of overtopping flows and may reduce the need for or eliminate the need for other forms of overtopping protection. The downstream dam foundation areas protected by tailwater will be limited, however. An additional limitation on the protection provided by tailwater is that tailwater levels can be reduced for a given discharge if downstream channel degredation occurs. If tailwater by itself is not effective in reducing the energy of overtopping flows, the designer must then determine an appropriate protective measure (e.g., adding a reinforced concrete liner to a previously unprotected rock plunge pool or adding a feature to the top of dam or release structure to break up the jet).

15.1 *Historical Perspective*

Erosion or scour of granular materials has been investigated for many years and empirical relationships developed that related scour depth to various hydraulic parameters.

Equations used in the past to calculate plunge pool scour are the Veronese, Mason and Arumugam, and Yildiz and Üzücek equations. Of these equations only the Mason and Arumugam equation acknowledges that material resistance plays a role in scour. The Veronese (1937) equation (Equation 15-1) is:

$$Y_S = 1.90H^{0.225}q^{0.54} \qquad \text{Eq. 15-1}$$

Where:

Y_S = depth of erosion below tailwater (meters)

H = elevation difference between reservoir and tailwater (meters)

q = unit discharge ($m^3/s/m$)

Yildiz and Üzücek (1994) present a modified version of the Veronese equation (Equation 15-2), including the angle, α, of incidence from the vertical, of the jet:

$$Y_S = 1.90H^{0.225}q^{0.54}\cos\alpha \qquad \text{Eq. 15-2}$$

The Mason and Arumugam (1985) prototype equation is given in (Equation15-3):

$$Y_S = K(q^xH^yh^w)/(g^vd^z) \qquad \text{Eq. 15-3}$$

Where:

- h = tailwater depth above original ground surface (meters)
- d = median grain size of foundation material, d_{50} (meters)
- g = acceleration of gravity (m/s^2)
- K = $6.42-3.1H^{0.10}$
- d = 0.25m
- v = 0.3
- w = 0.15
- x = 0.6-H/300
- y = 0.15+H/200
- z = 0.10

Unlike the Veronese and the Yildiz and Uzucek equations, the Mason and Arumugam equation includes a material factor, *d*. Although it is an attempt to acknowledge the role that material properties play in resisting scour, it is unlikely that this factor adequately represents the variety of material properties found in foundation materials. In addition, the materials in the movable beds of the hydraulic model studies may not scale very well to the rock material at a particular site. In most cases these equations are likely to result in a conservative estimate of maximum plunge pool scour depth, but not in all cases, particularly if the rock is likely to break into platy slabs or smaller blocks. Progression of erosion upstream also may not be realistically predicted for some rock geometries.

Pioneering work on plunge pool geology was conducted by Spurr (1985). He proposed a procedure that compares the hydraulic energy with the erosion resistance of the rock mass. The concept of using a rock mass index to correlate with the power it would take to remove the rock was original developed by Kirsten (1983) to characterize the rip-ability of earth materials using mechanical equipment and its associated horsepower. This was extended to examine the removal of rock from flowing water, and at that time the term “erodibility index” was coined. This index was correlated empirically to the erosive power of flowing water, or the energy rate of change, termed “stream power.” Data from the

performance of unlined spillways in both soil and rock were used to calibrate the method for erosion potential. Thus, this method can also be used for either soil or rock, but this section focuses on its use for estimating rock erosion.

Initial attempts to use the stream power-erosion relationship for predicting rock erosion began with investigation of continuing erosion below the spillway at Bartlett Dam, Arizona. The stream power-erosion relationsip was also applied to a new spillway design for Theodore Roosevelt Dam, Arizona that called for replacing the existing spillways with superelevated spillways that would direct jets to impact each other and then fall into an unlined rock plunge pool below the dam. (Reclamation, 1990b and 1993 and Frizell,1990).

The initial plots of erodibility were of soil materials, primarily from NRCS database. When the erosion resistance of rock was added to the chart, questions arose about the applicability of the method. Since then, many investigations have been performed comparing existing prototype rock erosion, primarily from spillway releases from high dams, with the methodology (Annandale, 2006). Good agreement has generally been found.

Overtopping of Gibson Dam occurred in 1964, Figure 15-1. Based on a detailed evaluation, the erodibility index of the dolomite abutment rock was estimated to be between 5,100 and 12,000 and the stream power was estimated to be between 43 kW/m^2 on the upper abutments and 258 kW/m^2 on the lower abutments. With these values, the stream power versus erodibility index would predict a probability of erosion of at most a few percent. In fact, there was very little erosion observed (see case history summary in the Appendix).

The erosion associated with overtopping is caused by a free-falling rectangular jet as the jet impacts on the abutments or into the tailwater pool below. This section will discuss only this type of jet and subsequent application related to impingement onto the exposed rock and into a tailwater pool. The hydraulic characteristics and erosive power associated with other types of flow and erosional applications will not be discussed.

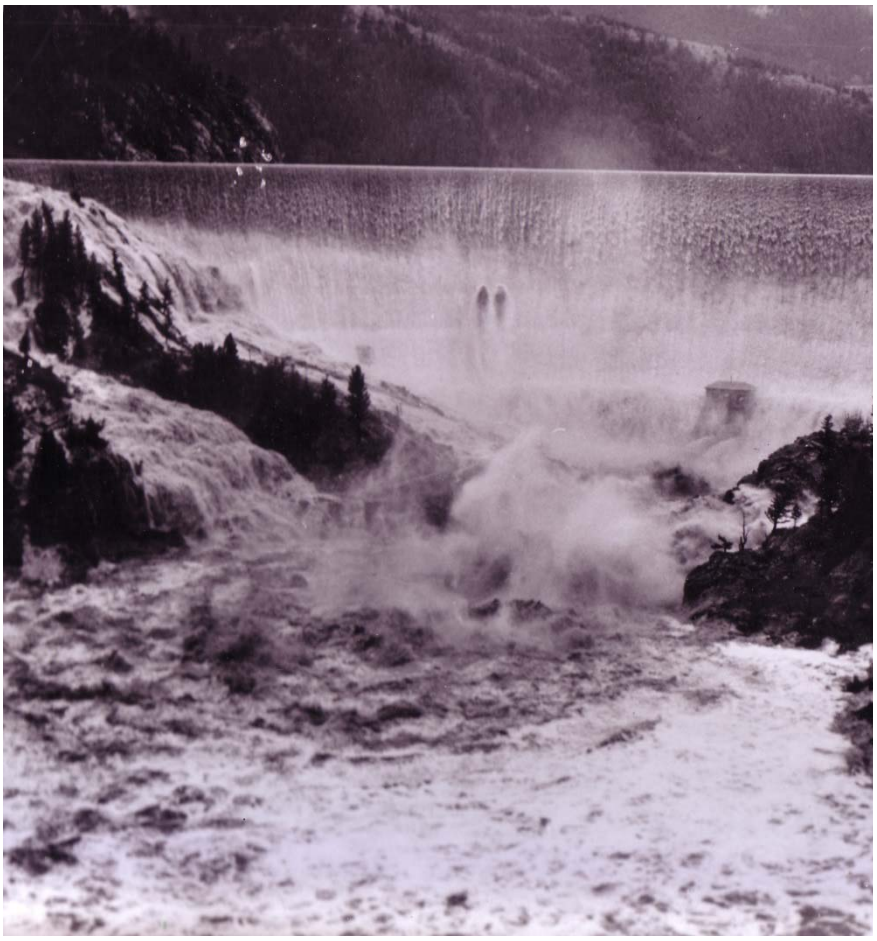

Figure 15-1.—Overtopping of Gibson Dam in 1964 by about 3 feet (Courtesy of the U.S. Geological Survey [USGS] and USFS).

15.2 *Design and Analysis*

Current design philosophy is to determine the energy in the flow at the point of entry to the plunge pool by determining the geometry and characteristics of the overtopping jet and then determining if the material can withstand the force of the water without eroding.

15.2.1 *Jet Characteristics*

The hydraulic properties of the jet that are included in the design are:

- Initial depth, velocity, discharge, aeration, turbulence, angle of issuance, and shape
- Jet break up
- Aeration and spread of the falling jet

- Jet velocity, depth, and angle at impingement with plunge pool
- Dissipation and/or spread in a plunge pool

Figure 15-2 shows a schematic of the jet properties that must be determined. A jet overtopping a concrete dam is usually of low initial turbulence and velocity and the trajectory is as described by Wahl et al. (2008). The footprint of the location of the impingement of the jet on the rock abutment, dam or in the tailwater below is then determined.

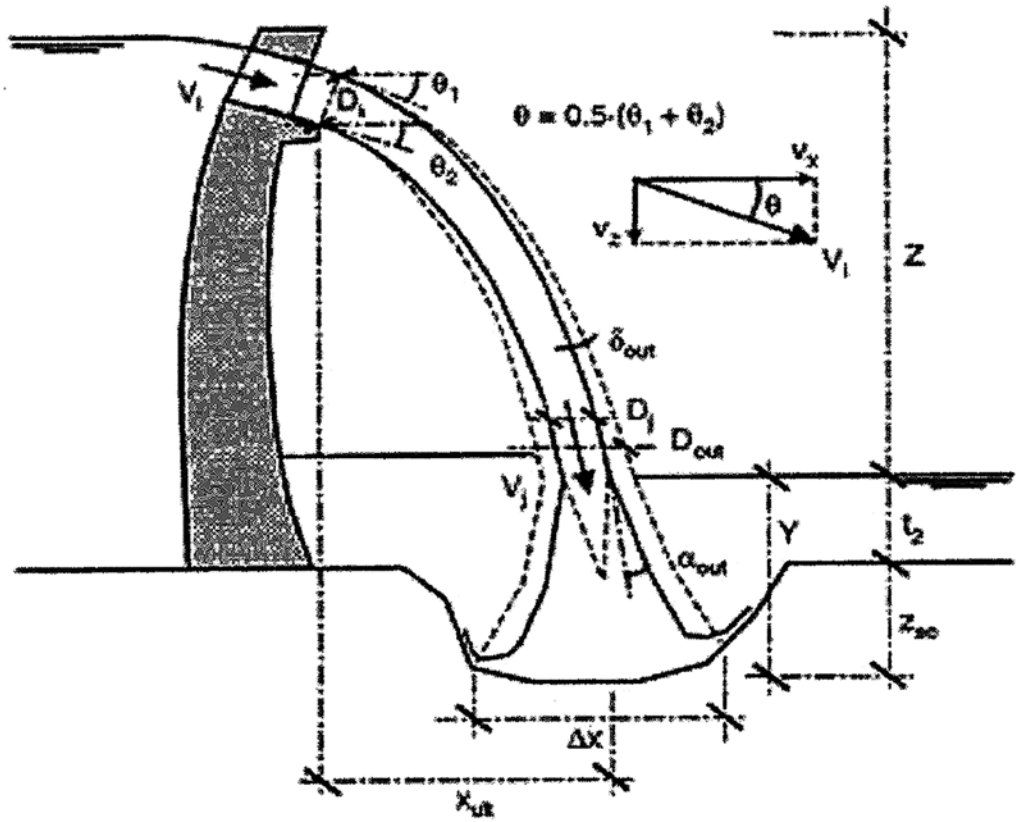

Figure 15-2.—Definition sketch for parameters of a free falling jet into a plunge pool. (Courtesy of Bollaert, 2002, all rights reserved).

The series of equations that are used to determine the jet characteristics of a rectangular jet are provided by Annandale (2006), and Castillo (2006). Jet spread and the presence of a water core are determined from Ervine and Falvey (1987) and reported in Annandale (2006). A more detailed discussion of the hydraulic characteristics of overtopping jets is provided in Chapter 11.

Stream Power

The stream power of the falling jet (Equation 15-4) is then determined from:

$$P = \frac{\gamma q Z}{d} \qquad \text{Eq. 15-4}$$

Where:

γ = the unit weight of water (9.82 KN/m^3)

q = the unit discharge at the location being examined ($m^3/s/m$)

Z = the head or height through which the jet falls (m)

d = the depth of the jet as it flows over the structure (the brink depth, shown as D_i in Figure 15-2) assumed to be the thickness of the jet as it impacts the rock (m)

This equation does not account for the contraction of the jet or the cushioning effects of tailwater (more cushioning with deeper tailwater) which occurs where the jet impacts on tailwater. For additional discussion on the effects of tailwater and a more detailed approach to calculating stream power, see Chapter 11.

Tailwater Pool

Bollaert (2002) and Annandale (2006) describe the behavior of the jet entering the plunge pool and provide a methodology to determine the impact pressure and potential for pressure fluctuations that may cause rock scour in the pool. Ervine et al. (1997) presented the basic relationship between the average dynamic pressure and dimensionless depth below the plunge pool water surface for round jets with a breakup length ratio (the ratio of the length of the jet divided by the breakup length) of 0.5 as shown in Figure 15-3.

The mean dynamic pressure coefficient, C_p, can be used to calculate the average dynamic pressures at the base of a plunge pool, using Equation 15-5:

$$P = C_p \gamma V_j^2/2g \qquad \text{Eq. 15-5}$$

Where:

C_p = the mean dynamic pressure coefficient

γ = the unit weight of water

V_j = the jet velocity at the water surface of the plunge pool

g = acceleration due to gravity

Other work by Castillo provides guidance on rectangular jets. Ervine (1997) and Bollaert (2002) provide equations and graphical results for predicting pressure fluctuations based upon turbulence intensity of the jet and aeration of the jet entering the pool.

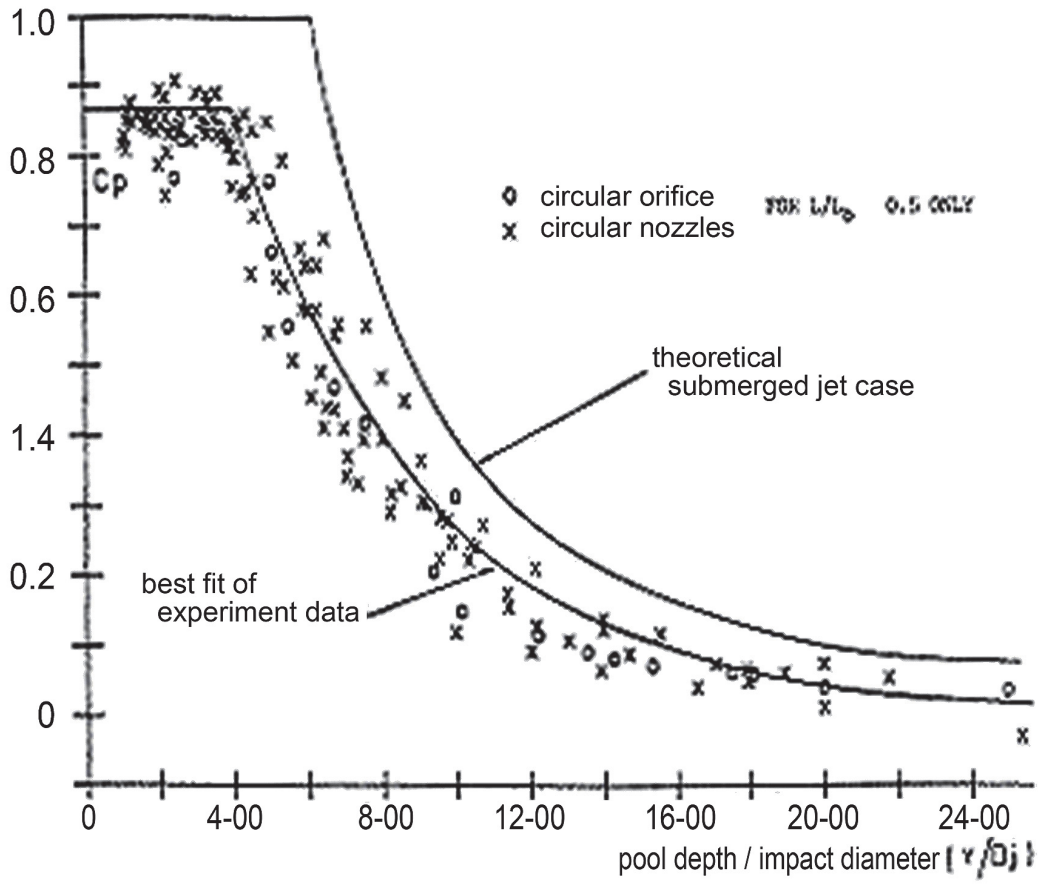

Figure 15-3.—Variation of mean dynamic pressure coefficient versus ratio of pool depth to jet impact diameter. (Ervine et.al., 1997 reprinted courtesy of Journal of Hydraulic Research, all rights reserved).

Erodibility Index

The rock properties are expressed as a function of the block size, K_b, material strength or mass strength, M_s, shear strength of joints, K_d, and relative ground structure number, J_s.

The erodibility index, K, (Equation 15-6) is the product of these four factors:

$$K = M_s K_b K_d J_s \qquad \text{Eq. 15-6}$$

Where:

M_s= the mass strength, usually defined as the uniaxial compressive strength (UCS) for rock (expressed in MPa) when the strength is greater than 10 MPa, and (0.78)(UCS)-1.05 when the strength is less than 10 MPa.

K_b defines the particle or fragment size of rock blocks that form the mass, which can be determined from joint spacing or rock mass classification parameters.

The simplest and most straight forward relationship is shown in Equation 15-7:

$$K_b = RQD/J_n \qquad \text{Eq. 15-7}$$

Where:

RQD = the rock quality designation and is measured by the percentage recovery of core in lengths greater than twice the core diameter

J_n = a modified joint set number, shown in Table 15-1.

K_d describes the interblock strength and is usually taken as J_r/J_a

J_r and J_a are based on joint surface characteristics defined by Barton's Q-system (1977) shown in Tables 15-2 and 15-3.

The relative shape and orientation of the blocks is accounted for by the J_s parameter. This represents the ease with which the water can penetrate the discontinuities and dislodge the blocks. Table 15-4 can be used to determine J_s.

The stream power -erodibility index method can be used to estimate the likelihood of rock erosion initiating. The erodibility index (and its possible variability) represents how erodible the foundation material is. It is relatively simple to calculate. The stream power represents the erosive power of the overtopping flows and is much more complicated to rigorously compute. This method will provide an indication as to the likelihood that erosion will initiate, and if so, additional judgment is needed as to whether the erosion will progress to the point of undermining and failing the dam. This requires evaluating the likelihood of erodibility at various depths and locations. The duration of overtopping flows should also factor into the judgment on the potential for reservoir breach.

Table 15-1.—Modified Joint Set Number Values (adapted from Annandale, 2006).

Jointing Description	Modified Joint Set Number (J_n)
Intact, no or few joints	1.00
One joint set	1.22
One joint set plus random joints	1.50
Two joint sets	1.83
Two joint sets plus random joints	2.24
Three joint sets	2.73
Three joint sets plus random joints	3.34
Four joint sets	4.09
More than four joint sets	5.00

Table 15-2.—Joint roughness number (adapted from Barton, 1977)

Joint Separation	Joint Condition	Joint Roughness Number
Tight—rock wall contact (or rock wall contact before 10 cm shear)	Discontinuous	4
	Rough or irregular, undulating	3
	Smooth, undulating	2
	Slickensided, undulating	1.5
	Rough or irregular, planar	1.5
	Smooth, planar	1.0
	Slickensided, planar	0.5
Open—no rock wall contact (even when sheared)	Clay mineral filling	1.0
	Sand, gravel, or crushed zone	1.0

15.2.5 *Erosion Potential*

The erodibility index is plotted against the stream power on Figure 15-4. This figure represents an evaluation of the original data used to develop the streampower erodibility index relationship evaluated using logistic regression by Wibowo et al. (2005a). The upper (blue line) represents a 99 percent chance of erosion initiating. The bottom orange line represents a 1 percent chance of erosion initiating, and the red line in the middle represents a 50 percent chance of erosion initiating. The green line just below the middle red line is the initial erosion threshold proposed by Annandale (2006). It can be seen that this represents about a 40 percent chance of erosion initiation based on the regression analysis. The likelihood of erosion initiation can be interpolated between these lines.

If erosion is predicted, but the character of the rock or hydraulic characteristics change with depth, then an iterative procedure can be employed whereby the rock is assumed to erode to a certain depth, and then the stream power and erodibility index are recalculated for the new geometry and geologic conditions, and re-plotted on the empirical chart. Due to uncertainties in obtaining input parameters, it is often necessary to look at a range of conditions. In addition, a jet plunging from the crest of a concrete dam will have different stream power values depending on the height of the dam and the distance to the foundation at any given point.

Some judgment is required when applying this method. The results can be sensitive to K_b, which is somewhat difficult to assess. In addition, materials will be more easily eroded on an abutment slope where there are more degrees of freedom for movement than in the bottom of a plunge pool where only the top of rock blocks are exposed. Cross jointing, if not present, can also increase the erosion resistance of the rock. These issues are not directly accounted for in this method. Unless there are very weak rocks, it takes at least three discontinuities to form a removable block. If removable foundation blocks do not exist, then erosion of the foundation becomes more difficult as fracturing of the rock will be required. A rigorous theorem for identifying removable blocks is given by Goodman and Shi (1985, page 23).

Table 15-3.—Joint Alteration Number (adapted from Barton, 1977)

Joint Separation	Joint Condition	Joint Alteration Number
Tight, rock wall contact	Tightly healed, hard, non-softening filling (quarts or epidote)	0.75
	Unaltered joint walls, surface staining only	1.0
	Slightly altered joint walls, non-softening mineral coatings (sandy particles)	2.0
	Silty or sandy-clay coatings (non-softening)	3.0
	Softening or low friction clay mineral coatings (< 1–2 mm thick)	4.0
Rock wall contact before 10 cm shear	Sandy particles (clay-free disintegrated rock)	4.0
	Strongly over-consolidated non-softening clay mineral fillings (< 5 mm thick)	6.0
	Clay mineral fillings, not strongly over-consolidated (<5 mm thick)	8.0
	Swelling clay fillings (< 5 mm thick, J_a increases with increasing percent of swelling clay)	8.0–12.0
No rock wall contact (even when sheared)	Zones or bands of silty or sandy clay (non-softening)	5.0
	Zones or bands of crushed rock and strongly over-consolidated clay	6.0
	Zones or bands of crushed rock and clay, not strongly over-consolidated	8.0
	Zones or bands of crushed rock and swelling clay fillings (J_a increases with increasing percent of swelling clay)	8.0–12.0
	Thick continuous zones or bands of strongly over-consolidated clay	10.0
	Thick continuous zones or bands of clay, not strongly over-consolidated	13.0
	Thick continuous zones or bands of swelling clay (J_a increases with increasing percent of swelling clay)	13.0–20.0

Table 15-4.—Determination of J_S (adapted from Annandale, 2006)

Joint Dip Angle in Flow Direction	Dip Down in Flow Direction Block Length/Thickness				Dip Up in Flow Direction Block Length/Thickness			
	1:1	1:2	1:4	1:8	1:1	1:2	1:4	1:8
0	1.14	1.09	1.05	1.02	1.14	1.09	1.05	1.02
1	1.50	1.33	1.19	1.10	0.78	0.85	0.90	0.94
5	1.39	1.23	1.09	1.01	0.73	0.79	0.84	0.88
10	1.25	1.10	0.98	0.90	0.67	0.72	0.78	0.81
20	0.84	0.77	0.71	0.67	0.56	0.62	0.66	0.69
30	0.63	0.59	0.55	0.53	0.50	0.55	0.58	0.60
40	0.53	0.49	0.46	0.45	0.49	0.52	0.55	0.57
50	0.49	0.46	0.43	0.41	0.53	0.56	0.59	0.61
60	0.50	0.46	0.42	0.40	0.63	0.68	0.71	0.73
70	0.56	0.50	0.46	0.43	0.84	0.91	0.97	1.01
80	0.67	0.60	0.55	0.52	1.26	1.41	1.53	1.61
85	0.73	0.66	0.61	0.57	1.39	1.55	1.69	1.77
89	0.78	0.71	0.65	0.61	1.50	1.68	1.82	1.91
90	1.14	1.20	1.24	1.26	1.14	1.20	1.24	1.26

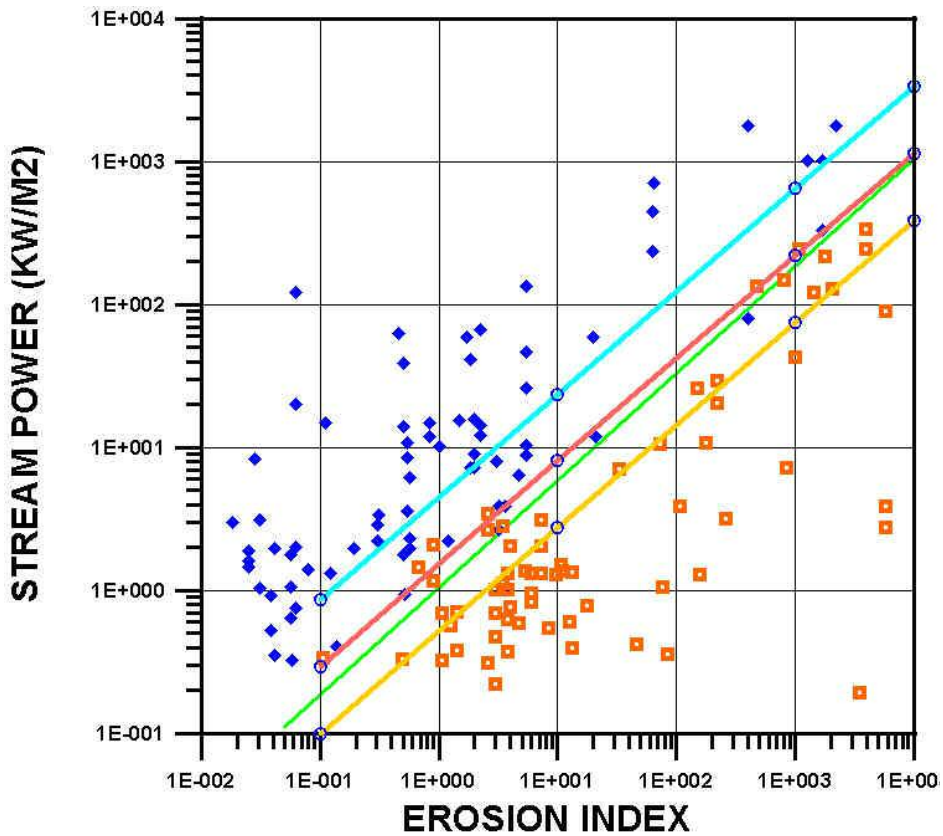

Figure 15-4.—Probability that erosion will occur based upon the available flow energy or stream power and the characteristics of the rock in terms of the erosion index. Probability of erosion by logistic regression for Annandale's regression line (Courtesy of Wibowo, 2005, USACE).

15.2.6 *Alternative Methods for Scour from a Plunging Jet*

An alternative method that predicts scour from a plunging jet into a tailwater pool is the Comprehensive Scour Model (Bollaert and Schleiss, 2003a and 2003b and Boellaert, 2004). This model is more rigorous than the streampower-erodibility index method. The numerical model was developed to account for the physical-mechanical processes that lead to scour in rock channels exposed to a plunging jet. The comprehensive scour model predicts the fracturing the rock joints due to dynamic water pressures (which completes rock joint networks and allows for the formation of rock blocks) and also models the ejection of individual rock blocks due to uplift pressure. The comprehensive scour model predicts the ultimate scour depth and the scour progression with time in a jointed rock mass.

15.3 *Construction Cnsiderations*

This chapter does not present construction of a protection measure. However, should a concrete plunge pool liner be determined to be necessary, the pressures of uplift and impact, average and fluctuating must be taken into account in the design and construction of the concrete lining (see Annandale, 2006, pp. 328–330).

15.4 *Vulnerabilities and Risk*

This complex issue requires a team of designers capable of determining the hydraulics of the jet and the geologic features of the rock with as much accuracy as possible. This may require extensive drilling to determine the rock characteristics and/or review of construction photos of the abutment and foundation areas.

Judgment is still required by the designer to apply the methodology as intended. The duration of the event is still an important parameter that is not accounted for in the erodibility index or the stream power.

Chapter 16. Summary of Overtopping Protection Alternatives for Concrete Dams

Several different types of overtopping protection systems have been considered or used for concrete dams. These systems are often used in combination, such overtopping protection for a concrete arch dam, where the upper abutments are reinforced with rock bolts, conventional concrete overlays are provided on the upper dam abutments in the areas where the overtopping jet will impact the dam foundation and tailwater is relied on in the center section of the dam to dissipate the energy of overtopping flows.

Overtopping protection for concrete dams differs from overtopping protection for embankment dams in that the areas typically protected for concrete dams focus on the foundation. Erosion of the dam itself is typically not a concern. Overtopping protection of the foundation should consider the effects of tailwater in dissipating the energy of overtopping flows and the characteristics of the foundation and the ability of the foundation to resist erosion from overtopping flows. It may be concluded that some areas of the foundation that are exposed to overtopping flows may be erosion resistant and that no protection is required in these areas.

As is the case for embankment dams, overtopping of a concrete dam should only be allowed for remote flood events. There will always be some uncertainty on the reliability of overtopping protection—and if overtopping protection fails, it is unlikely that intervention would be successful if an overtopping event initiates erosion of the dam foundation. Limiting the overtopping of the dam to remote events will reduce the annualized failure probability for flood overtopping potential failure modes.

The preceding chapters describe each of the overtopping protection systems in some detail, including a historical perspective of their development and use, design and analysis guidance, construction considerations, and a discussion of their potential vulnerabilities and risks, including potential failure modes. Selected case histories of these various types of systems have also been provided in the Appendix. The following sections provide a brief assessment of each of these systems using physical, hydrologic, and socio-economic factors as a means of comparison.

16.1 *Physical Factors*

Physical factors for assessment of overtopping protection systems for concrete dams include the physical dimensions of the dam itself, the physical properties of the system components, and the physical and geologic conditions of the site.

16.1.1 *Dam Dimensions*

The height of the concrete dam, or the difference in elevation between the dam crest and the downstream abutment (or downstream channel), determines the drop height for the dam overtopping protection, and will directly influence the energy of the overtopping flows that will impact on the downstream abutments or on overtopping protection that is in place. The dam height also affects the potential breach outflow in the event of dam failure and loss of reservoir, and therefore the downstream consequences and the hazard potential classification.

The crest length of the dam will determine the total discharge capacity (along with spillway and outlet works releases) which will determine the overtopping depths and durations when frequency floods are routed at the dam.

Overtopping flows will concentrate at the downstream groins of the dam, as overtopping flows from the upper portions of the abutments collect and flow to the downstream river channel. If parapet walls are provided at the crest of a concrete dam and the parapet walls do not extend all the way to the abutments, overtopping flows may be concentrated at the ends of the dam.

Additional protective measures and more robust overtopping protection designs may be required where flows may concentrate.

16.1.2 *Physical Properties of System Components*

The system components will have varying physical properties related to durability, constructability, drainage, performance, and maintenance. Durability relates to how resistant the system components are to corrosion, abrasion, cavitation damage, freeze-thaw damage. Systems relying upon steel components, such as rock reinforcement must consider corrosion protection in the design. Epoxy coated bars, greased and sheathed bars, or encapsulated anchors can be used. Concrete systems should also consider potential abrasion damage and debris loads during overtopping flows, which could lead to specifying higher concrete compressive strengths, or possibly allowing for a sacrificial surface subject to future loss as for RCC. Conventional concrete is commonly air-entrained for improved freeze-thaw performance. Most systems are not subjected to flow velocities sufficiently high to produce cavitation.

Constructability and contract duration will vary with the system and with the site. RCC and conventional and mass concrete designs will require contractors experienced with that specific type of construction. RCC construction can generally be performed faster than for conventional concrete, but the schedule may depend upon the details of the design and the working space.

Some form of drainage or pressure relief will be required for all overtopping protection systems. This will require special drainage layers, collector pipes, weep

holes and outlets. Drainage systems must protect against the development of uplift pressures.

The performance of most overtopping protection systems in the field under design loads is largely untested due to the remoteness of the design flood events. Some RCC overtopping protection projects have been shown to perform well for long durations and for overtopping depths of up to a few feet. The potential vulnerabilities and risks of each system should always be carefully evaluated before selection for final design and construction.

A terminal structure may be required at the downstream end of the system to provide energy dissipation for the overtopping flows. Most systems require some additional strength or capacity to resist the larger hydraulic forces normally associated with a hydraulic jump, such as an increased thickness or additional reinforcement.

Maintenance requirements will also vary with the system. All systems should be inspected regularly to the extent possible for signs of deterioration or damage. Trees, shrubs or other woody vegetation should never be permitted on the overtopping protection, to avoid potential damage by roots, allow proper inspection, and avoid flow disturbance during operation. Exposed concrete surfaces should be inspected for cracks and open joints. Drains should be periodically inspected and outlets should be maintained open and free-draining. Systems relying upon steel components, such as rock reinforcement must be periodically inspected for corrosion or abrasion damage.

16.1.3 *Site Conditions*

The foundation geology will greatly influence the ability of the foundation to resist overtopping flows and the need for overtopping protection. The orientation, spacing and openness of joints and fractures in the foundation rock will influence the erosion resistance of the foundation. If the foundation for a concrete dam consists of soil, the foundation will likely be very erodible.

Site conditions include climatic conditions, and will affect the availability of system components or materials. Climatic conditions will determine whether freeze-thaw protection is a consideration (not a concern in warmer climates). High temperatures or extreme temperature ranges may cause expansion and delamination or cracking of cast-in-place concrete systems.

Site access and the availability of materials will affect construction costs and may favor some systems over others. RCC and conventional or mass concrete overlays require a sufficient source of good quality sand and coarse aggregates and of cementitious materials.

16.2 *Hydrologic/Hydraulic Factors*

Hydrologic factors resulting from selecting the IDF, which may or may not be equal to the PMF for the overtopping protection system include:

- Design unit discharge and total discharge
- Design head on the crest
- Maximum flow velocity
- Jet trajectory and area
- Potential for breakup of the jet
- Downstream tailwater elevations

These factors are interrelated, as the:

- Total discharge is the product of the design unit discharge and the crest length
- Design head is a function of the unit discharge and the crest coefficient
- Flow velocity (or terminal velocity in some cases) is a function of the unit discharge, the drop height and the jet trajectory
- The potential for erosion of the foundation and/or the overtopping protection is a function of the energy of the overtopping jet or surface flow (streampower) and the erosion resistance of the foundation or overtopping protection (erodibility index).

The need for overtopping protection systems and the design of overtopping protection systems can be based on a streampower-erodibility index analysis in which the relative values for these two parameters are compared to empirical data and an estimate made on the likelihood of erosion initiating. Other more advance techniques that consider the rate at which erosion might occur and incorporate three dimensional effects have also been developed. The potential for erosion should be evaluated both for overtopping flows that impact directly on the foundation but also for surface flows that collect as overtopping flows travel down the dam abutments.

16.3 *Socio-Economic Factors*

Socio-economic factors affecting the selection of an overtopping protection system include construction cost, aesthetics, and downstream consequences. A detailed evaluation of construction costs for the various systems is beyond the

scope of this manual and will depend on the site characteristics and the foundation area downstream of the dam requiring protection.

Aesthetics may play an important role in the final appearance of an overtopping protection project. Although uncommon, colored concrete or concrete stains could be considered for RCC, conventional concrete or mass concrete installations if necessary.

Hazard potential classification is based on the probability of life loss, and the extent of property damage, in the event of dam failure. Dams located in or near populated areas will generally have a significant or high hazard potential classification. The designer of any overtopping protection project must determine whether there are any regulatory requirements or constraints that may limit the types of overtopping protection systems available for further consideration.

16.4 *Summary of Concrete Dam Overtopping Alternatives*

Where overtopping protection has been provided for concrete dams, a number of elements have been combined to provide the necessary protection. In a number of the cases, rock reinforcement, concrete protection and tailwater were all provided. Table 16-1 provides a summary of the case histories and provides information on the overtopping protection systems that were used.

Table 16-1 Summary of concrete dam overtopping protection case histories

Project	State	Type of Overtopping Protection			Hydraulic Model Study	Notes
		Concrete	Rock Reinforcement	Tail-water		
Boundary Dam	WA	conventional shotcrete	rock bolts	yes	Yes	Reduced overtopping on abutments.
Coolidge Dam	AZ	conventional	rock bolts	yes	Yes	Extensive concrete overlays on downstream abutments.
Gibson Dam	MT	conventional	rock bolts	yes	No	Dam overtopped by 3 feet in 1964 prior to addition of overtopping protection.
Railroad Canyon Dam	CA	conventional	rock anchors	tailrace weir added	No	Training walls guided flow from lower abutments to the tailrace area.
Sweetwater Dam	CA	mass	no	tailrace weir added	No	Dam overtopped a number of times in its early history and reservoir was breached in 1916 due to erosion around ends of dam.
Tygart Dam	WV	conventional	no	no	Yes	Overtopping protection provided at the toe of the dam on the abutments; training walls were used to control the flow at the toe of the dam and guide the overtopping releases to the spillway stilling basin.

References

The following references have been specifically cited in this manual.
An * indicates that this report is available on this DVD.

Abdo, F.Y. and W.S.Adaska. 2007. Performance Review of RCC Spillways and Overtopping Protection. Proceedings, 2008 Lawrence Kansas Dam Safety Conference, Portland Cement Association, Skokie, Illinois.

Abt, S.R. and T.L. Johnson. 1991. Riprap Design for Overtopping Flow. Journal of Hydraulic Engineering, 117(8), pp. 959 - 972.

Abt, S.R., J.R. Leech, C.I. Thornton, and C.M. Lipscomb. 2001. Articulated Concrete Block Stability Testing, Journal of the American Water Resources Association, Vol. 37, No. 1, pp.
27 -34. February 2001.

Abt, S.R., J.F. Ruff, R.J. Wittler, and D.L. LaGrone, 1987. Gradation and Layer Thickness Effects on Riprap. Proceedings, National Conference on Hydraulic Engineering, ASCE, New York, pp. 564 - 569.

Abt, S.R., R.J. Wittler., J.F.Ruff., and M.S. Khattak. 1988. Resistance to Flow over Riprap in Steep Channels. Water Resources Bulletin, 24(6), pp. 1193 - 1200.

American Concrete Institute (ACI), 2005. ACI 116R-00: Cement and Concrete Terminology, Reapproved 2005.

American Society of Civil Engineers (ASCE). 1994. Alternatives for Overtopping Protection of Dams, Hydraulics Division Task Committee on Alternatives for Overtopping Protection for Dams, New York, New York, 140 pages.

Anderson, A.G., A.S. Paintal, and J.T. Davenport. 1970. Tentative Design Procedure for Riprap Lined Channels. Report No. 108. Highway Research Board, National Academy of Sciences-National Academy of Engineering. Washington, D.C.

Annandale, G.W. 2006. Scour Technology—Mechanics and Engineering Practice, McGraw-Hill Civil Engineering Series, First Edition.

Australian National Committee on Large Dams (ANCOLD). 1982. Report on Mesh Protection of Rockfill Dams and Coffer Dams. March 1982.

Baker, R. 1992. Concrete Blocks for Dam Spillways. Ph.D. thesis, University of Salford, United Kingdom.

Baker, R., 1995. Building Blocks, International Water Power & Dam Construction. November: 16–18, 1995.

Baker, R. 2000a. Field Testing of Brushes Clough Stepped Block Spillway, Proceedings of the International Workshop on Hydraulics of Stepped Spillways, Zürich, Switzerland, H.E. Minor & W.H. Hager (eds). Balkema: pp. 13 - 20.

Baker, R. 2000b. The CIRIA guide for the design of stepped-block spillways, Proc Intl. Workshop on Hydraulics of Stepped Spillways, Zürich, Switzerland, H.E. Minor and W.H. Hager (eds). Balkema: 155–16.

Barton, N. 1977. Estimating the Shear Strength of Complex Discontinuities, International Symposium on the Geotechnics of Structurally Complex Formations. Vol. II, pp. 226 - 232, Capri.

Bass, R.P. and K.D. Hansen. 1998. RCC Overtopping Protection Turns 50, Proceedings, ASDSO Annual Conference, Las Vegas, Nevada.

Bathurst, R.J, R.E.Crowe, and A.C. Zehaluk. 1993. Geosynthetic Cellular Confinement Cells for Gravity Retaining Wall. Richmond Hill, Ontario, Canada, Geosynthetic Case Histories, International Society for Soil Mechanics and Foundation Engineering, March 1993, pp. 266 - 267.

Bollaert, E.F.R. 2002. Transient Water Pressures in Joints and Formation of Rock Scour due to High-Velocity Jet Impact.Communication 013, PhD Thesis No. 2548, Edited by Professor Dr. A. Schleiss, Lausanne, Switzerland, Ecole Polytechnique Federale de Lausanne.

Bollaert, E.F.R. 2004. A Comprehensive Model to Evaluate Scour Formation in Plunge Pools, International Journal of Hydropower & Dams, pp. 94 - 101.

Bollaert, E., A. Schlesiss. 2003a. Scour of rock due to the impact of plunging high velocity jets Part I: A State-of-the-Art Review, International Association of Hydraulic Engineering and Research, Journal of Hydraulic Research, Vol 41, No. 5, pp. 451 - 464.

Bollaert, E., A. Schlesiss. 2003b. Scour of Rock due to the Impact of Plunging High Velocity Jets Part II: Experimental Results of Dynamic Pressures at Pool Bottoms and in One-And Two-Dimensional Closed End Rock Joints. International Association of Hydraulic Engineering and Research, Journal of Hydraulic Research, Vol 41, No. 5, pp. 465 - 480.

Brown, B.S., and P.J.N. Pells. 1983. Analysing Anchor Loads in Rockfill Dams, Water and Power Dam Construction, pp. 50 - 53.

Bureau of Reclamation. See Reclamation.

Castillo, L.G. 2006. Aerated Jets and Pressure Fluctuation in Plunge Pools. Proceedings, 7th International Conference on HydroScience and Engineering, Philadelphia, Pennsylvania, Drexel University, ISBN:0977447405, September 10–13, 2006.

California Department of Transportation (Caltrans). 2003. Erosion Control New Technology Report, CTSW-RT-03-049, June 2003.

Caltrans. 2006.Cellular Confinement System Research Report, CTSW-RT-06-137.20.1, January 2006.

Cassard, A., F. Kern, and G. Mathieu. 1979. Use of Reinforcement Techniques in Earth Dams, Proceedings of International Conference of Soil Reinforcement. pp. 229 - 233 Vol. 1, Paris, France, March 1979.

Chamani, M.R. and N. Rajaratnam. 1994. Jet Flow on Stepped Spillways, Journal of Hydraulic Engineering, ASCE, 120 (2), pp 254 - 259.

Chanson, H. 2005. Hydraulic Design of Stepped Cascades, Channels, Weirs, and Spillways, Pergamon, United Kingdom.

Charman, J., L. Kostov, L. Minetti, J. Stoutesdijk, and D.Tricoli. 2001. Small Dams and Weirs in Earth and Gabion Materials. Food and Agriculture Organization of the United Nations (FOA), Land and Water Development Division, Rome, Italy.

Chinnarasri C., S. Donjadee, and U. Israngkura. 2008. Hydraulic characteristics of gabion-stepped weirs, Journal of Hydraulic Engineering, ASCE, 134 (8), pp. 1147 - 1152, 2008.

Chinnarasri C. and S. Wongwises. 2006. Flow patterns and energy dissipation over various stepped chutes, Journal of Irrigation and Drainage Engineering, ASCE, 132 (1), pp 70–76.

Choi, Ying-Kit and K.D. Hansen. 2005. RCC/Soil-Cement: What's the Difference?, Journal of Materials in Civil Engineering, ASCE, July/August 2005.

Chow, Ven Te. 1959. Open-Channel Hydraulics,McGraw-Hill Civil Engineering Series, McGraw-Hill Book Company, ISBN 07-010776-9.

Christodoulou, G.C. 1993. Energy Dissipation on Stepped Spillways, Journal of Hydraulic Engineering, ASCE, pp. 644-650.

Chugh, A.K. 1992. Stability of Overtopped Embankment Dams, Proceedings for Stability and Performance of Slopes and Embankments II, ASCE.

Clopper, P.E. 1991. Protecting Embankment Dams with Concrete Block Systems, Hydro Review, Vol. X, Number 2, April 1991.

Cooper, C. R. 2005. Closed Circuit Television Inspection of Outlet Works and Spillway Conduits and Toe Drains, ASDSO.

Cox, A.L. 2010. Moment Stability Analysis Method for Determining Safety Factors for Articulated Concrete Blocks, PhD. Dissertation Colorado State University, Fort Collins, Colorado, Summer 2010.

Crowe, R.E., R.J. Bathurst, and C. Alston. 1989. Design and Construction of a Road Embankment Using Geosynthetics, Proceedings of the 42nd Canadian Geotechnical Conference, Canadian Geotechnical Society, Winnipeg, Manitoba, Canada, October 1989,
pp. 266 - 271

CSU. 2013. Personal Communication. Summary of Overtopping Tests. Memorandum from C.I. Thornton, Director, CSU Engineering Research Center and Hydraulics Laboratory, to Bradford Cooley, Watershed Geosynthetics, LLC, May 13, 2013.

de Marinis, G., U. Fratino, A.F. Piccinni. 2000. Dissipation Efficiency of Stepped Spillways, Proceedings International Workshop on Hydraulics of Stepped Spillways, Minor and Hager eds., Balkema: pp. 103 - 110.

Delleur, J. W., J.C.I. Dooge, and K.W. Gent. 1956. Influence of Slope and Roughness on the Free Overfall. Proceedings of ASCE, Vol. 82, No. HY4, Paper No. 1038, pp 1038-30 - 1038-35.

Ditchey, E. J. 1992. Rehabilitating Small Earth Embankments With RCC, Roller Compacted Concrete III, ASCE, New York, New York, February 1992.

*Dodge, R.A. 1988. Overtopping Flow on Low Embankment Dams—Summary Report of Model Tests. REC-ERC-88-3, U.S. Department of Interior, Reclamation, Denver, Colorado, August 1988.

Engel, P. and G. Flato. 1987. Flow Resistance and Critical Flow Velocities. Prepared for GEOWEB Erosion Control System, Research and Applications Branch—National Water Research Institute Canada Centre for Inland Waters, Burlington, Ontario, Canada, March 1987

Ervine, D.A. and H.R. Falvey.1987. Behaviour of Turbulent Water Jets in the Atmosphere and in Plunge Pools, Paper 9136, Water Engineering Group, Proceedings of the Institution of Civil Engineers, Part 2, Volume 83, pp. 295 - 314.

Ervine, D.A.; H.R. Falvey; and W. Withers. 1997.Pressure Fluctuations on Plunge Pool Floors, ASCE Journal of Hydraulic Research, 35(2), pp. 257 - 279.

*Federal Emergency Management Agency (FEMA). 2004. Federal Guidelines for Dam Safety: Hazard Potential Classification Systems for Dams, FEMA 333, Rev 2004.

*FEMA. 2008. Geotextiles in Embankment Dams. Status Report.

*FEMA. 2011. Filters for Embankment Dams. Best Practices for Design and Construction.

*FEMA. 2013. Selecting and Accommodating Inflow Design Floods for Dams. FEMA P-94, August 2013.

Fratino, U. 2004. Nappe and Transition Flow Over Stepped Chutes. Proceedings International Workshop on Fluvial, Environmental, and Coastal Developments in Hydraulic Engineering, Mossa, Yasuda and Chanson eds., Balkema, pp. 99 - 115.

Fratino, U., F.M. Renna. 2009. Flow Features on Gabion Stepped Weir, 33rd (IAHR) Congress Water Engineering for a Sustainable Environment. ISBN 978-90-78046-08-0. Vancouver (Canada), August 10-15, 2009

Frizell, K.H. 1990. Hydraulic Model Study of the Theodore Roosevelt Dam Spillway Modifications. R-90-08. U. S. Department of Interior, Reclamation, Technical Services Center, Denver, Colorado, July 1990.

Frizell, K.H., Yellowtail Dam Issue Evaluation - Analysis of the Erosion Potential of Flow Overtopping, TM No. YEL-8460-IE-2009-1, U. S. Department of Interior, Reclamation, Technical Services Center, Denver, Colorado, September 2009.

Frizell, K.H., P.J. Hensley, D.J. Hinchliff, and C. Henning. 1990. Overtopping Protection for Embankment Dams, ASCE Proceedings of the 1990 National Conference on Hydraulic Engineering, San Diego California, August 1990.

Frizell, K.H., J. Matos, and A.N. Pinheiro. 2000. Design of Concrete Stepped Overlay Protection for Embankment Dams Proceedings International Workshop on Hydraulics of Stepped Spillways, Zurich, Switzerland, H.E. Minor and W.H. Hager (eds), Balkema: pp. 155 - 161.

Frizell, K.H., B.W. Mefford, R.A. Dodge, and T.B. Vermeyen. 1991. Embankment Dams: Methods of Protection During Overtopping. Hydro Review, Vol. X, Number 2, April 1991.

Frizell, K.H., J.F. Ruff, and S. Mishra. 1998. Simplified Design Guidelines for Riprap Subjected to Overtopping Flow. In: Dam Safety '98, Proceedings of the Annual Conference of the Association of State Dam Safety Officials, Las Vegas, Nevada.

Frizell, K.H., D.H. Smith, and J.F. Ruff. 1994. Stepped Overlays Proven for Use in Protecting Overtopped Embankment Dams, Proceedings of the Association of State Dam Safety Officials (ASDSO), 11th Annual Conference, USA.

Gaston, M.L. 1995. Air Entrainment and Energy Dissipation on a Stepped Blocked Spillway. M.Sc Thesis, Colorado State University, Fort Collins, Colorado, 1995.

Gonzalez, C.A. and H. Chanson. 2006. Flow Resistance and Design Guidelines for Embankment Stepped Chutes. Proceedings of the International Symposium on Dams in the Societies of the 21st Century, ICOLD, Leiden, Netherlands, June 2006.

Goodman, R.E. and G.H.Shi. 1985. Block Theory and Its Application to Rock Engineering. Prentice-Hall: Englewood Cliffs, New Jersey.

Hansen, K.D. 1989. Performance of Roller-Compacted Concrete Dam Rehabilitations, Proceedings of the 6th Annual ASDSO Conference, Albuquerque, New Mexico, October 1989.

Hansen, Kenneth, 2014. Personal Communication from Kenneth Hansen, P.E., Individual Consulting Engineer to Tom Hepler, Civil Engineer, Technical Service Center, Reclamation.

Hanson, G.J. and D.M.Temple. 2002. Performance of Bare-Earth and Vegetated Steep Channels under Long-Duration Flows. Transactions of the American Society of Agricultural Engineers. 2002. Vol. (45)3: pp. 695 - 701.

Harris County Flood Control District (HCFCD). 2001. Design Manual for Articulating Concrete Block Systems. Prepared by Ayres Associates, Project No. 32-0366.00, September 2001.

Hartung, F. and H.Scheuerlein. 1970. Design of Overflow Rockfill Dams. Proceedings of the 10th ICOLD Congress, Montreal, Quebec, Canada, Q36, R35, pp. 587 - 598.

Heibaum, M.H. 2000. Scour Countermeasures using Geosynthetics and Partially Grouted Riprap. Transportation Research Record 1696, Vol. 2, Paper Number. 5B0106, pp. 244 - 250.

Henry, J.F. 1977. Rockfill Dams Designed for Overtopping During Construction. Presentation at the winter meeting of the American Society of Agriculture Engineers, December, 1977.

Hensley, P J. and C.C. Hennig. 1991. Overtopping Protection for A.R. Bowman Dam. ASCE Proceedings of the 1991 National Conference on Hydraulic Engineering, Nashville Tennessee, August 1991.

Hepler, T E. 1992. RCC Buttress Construction for Camp Dyer Diversion Dam. 1992 Annual Conference Proceedings, Association of State Dam Safety Officials, Lexington, Kentucky, September 1992.

Hepler, T E. and P.L. Johnson. 1988. Analysis of Spillway Failures Caused by Uplift Pressure. Proceedings of National Conference on Hydraulic Engineering and International Symposium on Model-Prototype Correlations, ASCE, August 8–12, 1988.

Hewlett, H.W.M., R. Baker, R.W.P. May, and Y.P. Pravdivets. 1997. Design of Stepped-Block Spillways. Special Publication 142, Construction Industry Research and Information Association (CIRIA), London, England.

Hewlett, H.W.M., L.A.Boorman, and M.E. Bramley. 1987. Design of Reinforced Grass Waterways. CIRIA Report 116, Construction Industry Research and Information Association, London, England, 116 pp.

Hill, D.M. 1997. Alternative Materials for Overtopping Protection. Proceedings of the 1997 International Conference on Hydropower, ASCE, New York, New York, August 1997.

Horeni, P. 1956. Desintegration of a Free Jet of Water in Air, Sesit 93, Praha, Pokbaba.

Houston, K.L. 1987. Hydraulic Model Studies of Upper Stillwater Dam Stepped Spillways and Outlet Works, REC-ERC-87-6, Reclamation, Denver, Colorado.

*Houston, K.L. and A.T. Richardson. 1988. Energy Dissipation Characteristics of a Stepped Spillway for an RCC Dam, International Symposium on Hydraulics for High Dams, Beijing, China.

Hudock, G.W. and J. Semerjian. 2010. Performance of the Yellow River Roller Compacted Concrete Overtopping Spillways During the September 2009 Georgia Floods, Dam Safety Proceedings, ASDSO, Seattle Washington.

Hunt, S.L. and K.C. Kadavy. 2008a. Velocities and Energy Dissipation on a Flat Sloped Stepped Spillway. ASABE Paper No. 084151, St. Joseph, Michigan.

Hunt, S.L. and K.C. Kadavy.2008b. Energy Dissipation on a 4(H):1(V) Stepped Spillway. Proceedings of the ASDSO Annual Meeting, Lexington, Kentucky.

Hunt, S.L. and K.C. Kadavy.2009a. Inception Point Relationship for Flat-Sloped Stepped Spillways. ASABE Paper No. 096571, St. Joseph, Michigan.

Hunt, S.L. and K.C. Kadavy.2009b. The Effect of Step Height on Energy Dissipation in Stepped Spillways, Proceedings of the ASCE EWRI World Water and Environmental Resources Congress, Kansas City, Kansas.

Hunt, S.L., D.W. Reep, and K.C.Kadavy. 2008. RCC Stepped Spillway for Renwick Dam – A Partnership in Research and Design, Journal of Dam Safety, Volume 6, Issue 2.

Isbash, S.V. 1936. Construction of Dams by Depositing Rock in Running Water. Second Congress on Large Dams, Washington, D.C., Communication No. 3.

Jacobs, M., A. Rotter, T. Cazier, and P. Clopper. 2004. Performance of Articulated Concrete Block on Steep Slopes Following Extreme Storm Events.

King, J.R., R.K.Frithiof, and L.B. Yates. 1997. Dam Engineers Go Over the Top, Civil Engineering Magazine, ASCE, January 1997.

Kirsten, H.A.D. 1983. A Classification System for Excavation in Natural Materials, the Civil Engineer in South Africa, July. Vol. 25, No. 5, May 1983. pp. 292 - 308,.

Knauss, J. 1979. Computation of Maximum Discharge at Overflow Rockfill Dams. Proceedings, International Commission on Large Dams, Thirteenth International Congress on Large Dams, Q.50, R.9, New Delhi, India, p. 143–160.

Kozoreozva, I.M. 1977. Evaluation of Energy Dissipation on Sprawling Membrane Spillways, Novachersassk Institute of Reclamation Engineering, U.S.S.R. December 12, 1977.

Kravitz, D. 2010. Dam Failure Drains Fairfax County Lake, Kills Wildlife. Washington Post, October 5, 2010.

*Lagasse, P.F., P.E. Clopper, J.E. Pagán-Ortiz, L.W. Zevenbergen, L.A. Arneson, J.D. Schall, and L.G. Girard. 2009. Bridge Scour and stream Instability Countermeasures: Experience, Selection, and Design Guidance. Volumes 1 and 2, 3rd Edition, Federal Highway Administration (FHWA), Hydraulic Engineering Circular Number. 23, Publication Nos. FHWA-NHI-09-111 and FHWA-NHI-09-112, 2009.

Leech, J.R., S.R.Abt, C.I. Thornton, and P.G. Combs. 1999. Developing Confidence in Concrete Revetment Products for Bank Stabilization, Journal of the American Water Resources Association. Vol. 35, Number. 4, August 1999, pp. 877 - 885.

Leps, T. M. 1973. Flow Through Rockfill. Embankment Engineering—Casagrande Volume, edited by Hirschfeld, Ronald C. and Poulos, Steve J., Wiley & Sons, New York pp. 87 – 107.

Mason, P.J. and K. Arumugam. 1985. Free Jet Scour below Dams and Flip Buckets. ASCE Journal of Hydraulic Engineering, Vol. 111, No. 2, February 1985.

Matos, J., A. Pinheiro, and Q.A. Carvalho, and Frizell, K.H. 2001. On the Role of Stepped Overlays to Increase Spillway Capacity of Embankment Dams, International Journal of Hydraulic Research.

*Maynord, S.T. 1988. Stable Riprap Size for Open Channel Flows. Technical Report HL-88-4. U.S. Army Corps of Engineers, Waterways Experiment Station, Vicksburg, Mississippi.

Melville, B., R. van Ballegooy, and S. van Ballegooy. 2006. Flow-Induced Failure of Cable-Tied Blocks, ASCE Journal of Hydraulic Engineering, March 2006.

Metcalf, M., T.P. Dolen, and P.A. Hendricks. 1992. Santa Cruz Dam Modification. ASCE Third Conference on Roller Compacted Concrete, February, 1992.

Miller, S. P., and D.C. Ralston. 1987. Embankment Overtopping—Case Histories. Hydraulic Engineering, Proceedings of the 1987 National Conference, ASCE, New York, New York.

Mishra, S.K. 1998. Riprap Design for Overtopped Embankments. PhD Thesis, Colorado State University, Department of Civil Engineering, Fort Collins, Colorado.

Morán R., and Toledo M.A. 2008. Wedge-Shaped Blocks Spillway upon Barriga Dam (Burgos), Proceedings of VIII Jornadas Españolas de Presas, Córdoba, Spain. Ed. SPANCOLD.

Morán R, and Toledo M.A. 2013a. Design and Construction of the Barriga Dam Spillway through an Improved Wedge-Shaped Block Technology. Canadian Journal of Civil Engineering.

Morán, R., 2013b. Improvement of the Safety of Rockfill Dams During Through-flow Processes Using Downstream Rockfill Toes, PhD. Thesis, Technical University of Madrid, Spain.

Moyle, J.H. 1996. Submittal and Review Requirements for Overtopping Protection Utilizing Articulated Concrete Blocks (ACBs), New Jersey Bureau of Dam Safety and Flood Control.

National Concrete Masonry Association (NCMA). 2006. Articulating Concrete Block (ACB) Installation. Tek 11-13.

National Concrete Masonry Association (NCMA). 2010. Design Manual for Articulating Concrete Block (ACB) Revetment Systems. Second Edition., TR220A, 2010. 76 pp.

*Natural Resources Conservation Service (NRCS). 2007. Use of Articulating Concrete Block Revetment Systems for Stream Restoration and Stabilization Projects. Technical Supplement 14L, U.S. Department of Agriculture, 210-VI-NEH, August 2007. http://directives.sc.egov.usda.gov/17822.wba.

Olivier, H. 1967. Through and Overflow Rockfill Dams—New Design Techniques. Proceedings, Institution of Civil Engineers, 36, Paper No. 7012, pp. 433 - 471.

Paxson, G. 2007. Justifying the Ends: Energy Dissipation and Terminal Structures for Embankment Armoring, Proceedings of the 2007 ASDSO Annual Conference, Madison, Wisconsin, September 2007.

Peirson, W.L. and S. Cameron. 2006. Design of Rock Protection to Prevent Erosion by Water Flows Down Steep Slopes. Journal of Hydraulic Engineering, 132(10), 1110–1114.

Peirson, W.L., J. Figlus, S.E. Pells, and R.J. Cox. 2008. Placed Rock as Protection Against Erosion by Flow Down Steep Slopes. Journal of Hydraulic Engineering, Vol. 134, Number 9.

Peterka, A.J. 1953. The Effect of Entrained Air on Cavitation Pitting. Proceedings of the Joint Meeting of the International Association for Hydraulic Research and the American Society of Civil Engineers, Minneapolis, Minnesota, August, 1953.

Peyras, L., P. Royet, and G. Degoutte. 1992. Flow and Energy Dissipation over Stepped Gabion Weirs. Journal of Hydraulic Engineering, ASCE, 125 (5).

Post-Tensioning Institute. 2004. Recommendations for Prestressed Rock and Soil Anchors, Phoenix, Arizona, Fourth Edition.

*Portland Cement Association (PCA). 2002. Design Manual for RCC Spillways and Overtopping Protection, Prepared by URS Greiner Woodward Clyde, Skokie, Illinois.

Powledge, G.R., D.C. Ralston, P. Miller, Y.H. Chen, P.E. Clopper, and D.M. Temple. 1989. Mechanics of Overflow Erosion on Embankments. I: Research Activities and II: Hydraulic and Design Considerations, American Society of Civil Engineering, Journal of Hydraulic Engineering, Vol. 115, Number. 8, August 1989.

Powledge, G.R. and Y.P. Pravdivets. 1994. Experiences with Embankment Dam Overtopping Protection, Hydro Review Magazine, February 1994.

*Reclamation. 1952. Discharge Coefficients for Irregular Overfall Spillways. Engineering Monograph No. 9, Denver, Colorado, March 1952.

*Reclamation.1978. Hydraulic Design of Stilling Basins and Energy Dissipators. Engineering Monograph No. 25, Denver, Colorado.

*Reclamation. 1980. Air-Water Flow in Hydraulic Structures. Engineering Monograph No. 41, December 1980.

*Reclamation. 1987a. Design of Small Dams.

Reclamation.1987b. Design Summary, Big Sandy Dam Safety Spillway Modification. Eden Project, Wyoming, March 1987b.

*Reclamation. 1990a. Cavitation in Chutes and Spillways. Engineering Monograph No. 42, Technical Service Center, Denver, Colorado, April 1990a.

Reclamation.1990b. TM No. TR-3620-09. Theodore Roosevelt Dam—Flip Bucket Foundation Stability for Theodore Roosevelt Dam Modification. Denver, Colorado, June 22, 1990b.

Reclamation. 1993. Plunge Pool Performance Study—Project Data Review/Literature Search - Theodore Roosevelt Dam. Prepared for BOR by Harza Engineering Company, PAP-713, U. S. Department of Interior, Reclamation, Technical Services Center, Denver, Colorado.

Reclamation, 1997. Guide to Concrete Repair. Technical Service Center. Materials Engineering and Research Lab. http://www.usbr.gov/pmts/materials_lab/repairs/guide.pdf

Reclamation. 1998. Engineering Geology Field Manual, Second Edition, Volume 1, Denver, Colorado.

Reclamation. 2002. Report of Findings, Pueblo Dam Modification, Fryingpan-Arkansas Project. Denver, Colorado.

*Reclamation. 2004. Drainage for Dams and Associated Structures, Technical Services Center, Denver, Colorado.

Reclamation. 2005a. Hyrum Dam Issue Evaluation Hydrologic Risk Analysis, Technical Memorandum No. HYM-8130-IE-2005-2, Technical Service Center, Denver Colorado, May 2005a.

*Reclamation. 2005b. Roller-Compacted Concrete—Design and Construction Considerations for Hydraulic Structures, Technical Service Center, Denver, Colorado.

Reclamation. 2006. Hydraulic Investigations of the Erosion Potential of Flows Overtopping Gibson Dam. Hydraulic Laboratory Report HL-2006-02. Technical Service Center Water Resources Research Laboratory.

Reclamation. 2007a. Comprehensive Facility Review, Currant Creek Dam, Bonneville Unit, Central Utah Project, Upper Colorado Region, Technical Service Center, Denver Colorado, August 2007a.

*Reclamation. 2007b. Uplift and Crack Flow Resulting from High Velocity Discharges over Open Offset Joints., Report DSO-07-07, Technical Service Center, Denver Colorado, December 2007b.

Reclamation. 2010. Comprehensive Facility Review, Meeks Cabin Dam, Lyman Project, Upper Colorado Region. Technical Service Center, Denver Colorado, February 2010.

*Reclamation. 2011. Design Standards No. 13, Embankment Dams, Chapter 5—Protective Filters., Technical Service Center, Denver, CO, Rev 2011.

*Reclamation. 2013a. Design Standards No. 13, Embankment Dams, Chapter 7—Riprap Slope Protection. Technical Service Center, Denver, Colorado, Rev 2013.

Reclamation. 2013b. Design Standards No. 14, Appurtenant Structures for Dams (Spillways and Outlet Works), Chapter 2 - Hydrologic Considerations. Technical Service Center, Denver, Colorado, 2013.

Reclamation. 2014 Design Standard No. 13, Chapter 7, Riprap Slope Protection. Technical Service Center, Denver, Colorado, Rev 2013 (in progress).

Reclamation and U.S Army Corps of Engineers. 2013. Dam Safety Risk Analysis Best Practices Training Manual. December, 2013.

Relvas, A.and A. Pinheiro. 2008. Inception Point and Air Concentration in Flows on Stepped Chutes Lined with Wedge-Shaped Concrete Blocks. ASCE Journal of Hydraulic Engineering, Volume 134 (8), pp. 1042 - 1051.

Rice, C.E., K.C. Kadavy, and K.M. Robinson. 1998. Roughness of Loose Rock Riprap on Steep Slopes. Journal of Hydraulic Engineering, 124(2),pp. 179 - 185.

Richards, G.L., A. Miller., P.G. Schweiger, J.E. Demby, and A.J. Hess. 2013. Selecting and Accommodating Inflow Design Floods for Dams: Beyond the Guidelines. The Journal of Dam Safety, ASDSO, Volume 11, Issue 4.

Riley, R.C. 1986. A Procedure for Evaluating Permissible Limits of Overtopping of Vegetated Earthen Embankments. In: Dam Safety '86, Proceedings of the 1986 ASDSO Annual Meeting, Austin, Texas, October 1986.

Robinson, K.M., C.E. Rice, and K.C. Kadavy. 1998. Design of Rock Chutes. Transactions of the ASAE, 41(3), pp. 621 - 626.

Roskie, G.F. 2014. Photograph of Gibson Dam, Sun River, Montana. https://water.usgs.gov/osw/images/2011_Photos/Disaster/11-014_02.jpg. Accessed 3/5/2014.

Rouse, H.R. 1936. Discharge Characteristics of the Free Overfall, Civil Engineering, Volume 6, Number 4.

Schrader, E. 1995. Roller Compacted Concrete Cavitation and Erosion Resistance, March 1995.

Schweiger, P.G. 2002. The State-of-the-Art of Armoring Embankment Dams Using Articulating Concrete Blocks, Proceedings Association of State Dam Safety Officials (ASDSO).

*Scott, G.A. 1999. Guidelines for Geotechnical Studies for Existing Concrete Dams, Reclamation, Denver, Colorado, September 1999.

Shaffer, Darin, 2014. Personal Communication from Darin Shaffer, Supervising Engineer, New Jersey Bureau of Dam Safety & Flood Control to Tom Hepler, Civil Engineer, Technical Service Center, Reclamation, July 9, 2013.

Sherard, J.L. 1972. Guaremal Dam Design Review, Appendix—Spillways Constructed on Top of Earth Dams, June 1972.

Siddiqua, S., J. A.Blatz, and N.C. Privat.2013. Evaluating the Behaviour of Instrumented Prototype Rockfill Dams. Canadian Geotechnical Journal, 50(3), pp. 298 - 310.

Simons, D.B., Y.H. Chen, and L.J. Swenson. 1984. Hydraulic Test to Develop Design Criteeria for the Use of Reno Mattresses, Civil Engineering, Colorado State University, Fort Collins, Colorado, March 1984.

Simons, Li & Associates. 1988. Full Scale Hydraulic Studies of GEOWEB Grid Confinement System for Minimizing Embankment Damage During Overtopping Flows, Report to Presto Products Company, February 1988

Simons, Li & Associates. 1990. Designing Stable Channels with Armorflex Articulated Concrete Block Revetment Systems, Copyright Armortec.

Slovensky, G.G. 1993. Near-Prototype Testing of Wedge-Block Overtopping Protection. Thesis, Colorado State University, Fort Collins, Colorado.

Spurr, K.J.W. 1985. Energy Approach to Estimating Scour Downstream of a Large Dam. Water Power & Dam Construction, Vol. 37, Number 11, pp. 81 - 89.

Stephenson, D. 1979a. Gabion Energy Dissipators. Proceedings 13th ICOLD Congress, New Delhi, India, Q. 50, R. 3, pp. 33 - 43.

Stephenson, D. 1979b. Rockfill in Hydraulic Engineering. Developments in Geotechnical Engineering 27, Elsevier, New York, pp. 50 - 51.

Stephenson, D., 1980. The Stability of Gabion Weir. Water Power and Dam Construction, April 1980.

Stephenson, D. 1991. Energy Dissipation Down Stepped Spillways. Water Power and Dam Construction, 43 (9), pp. 27 - 30.

Stinebring, D.R. 1976. Scaling of Cavitation Damage. Masters Thesis, Pennsylvania State University, August 1976, 160 pp.

Tatro, S.B., J.K. Hinds, and J.L. West. 2008. Properties of Grout Enriched Roller Compacted Concrete. The Journal of Dam Safety, ASDSO, Lexington Kentucky, Vol. 6, Issue 3.

Tayabaji, S.D. and P.A. Okamoto. 1987. Bonding of Successive Layers of Roller Compacted Concrete, Construction Technologies Report to U.S. Department of Interior, Reclamation.

Taylor, E. H. 1991. The Khasab Self Spillway Embankment Dams. Proceedings of the International Commission on Large Dams (ICOLD), Vienna, Austria, Question Number 67, Response Number 12.

Temple, D.M. 1987. Vegetal Protection of Embankments and Spillways. In: Hydraulic Engineering, Proceedings of the 1987 ASCE National Conference on Hydraulic Engineering, Williamsburg, Virginia, August 3-7, 1987, p. 745-750.

*Temple, D.M., K.M. Robinson, R.M. Ahring, and A.G. Davis. 1987. Stability Design of Grass-Lined Open Channels. USDA Agriculture Handbook Number 667, 167 pp.

Temple, D.M., K.R. Cook, M.L. Neilsen, and S.K.R. Yenna. 2003. Design of Grass-Lined Channels: Procedure and Software Update. American Society of Agricultural Engineers, 2003 Annual International Meeting, Las Vegas, Nevada, July 27-30, 2003.

Temple, D.M., and W. Irwin. 2006. Allowable Overtopping of Earthen Dams. In: Dam Safety 2006. Proceedings of the Association of State Dam Safety Officials Annual Conference, September 10–14, 2006, Boston, Massachusetts. 2006 CDROM.

Thornton, C.I., M.D. Robeson, D.R. Varyu. 2006. ArmorWedge™ Data Report 2006 Testing for Armortec Erosion Control Solutions, Inc., Colorado State University, Engineering Research Center, Fort Collins, Colorado, April 2006. (Confidential and proprietary).

*Timblin, L.O. 1985. The Use of Geomembranes for Emergency Spillways. Water Power and Dam Construction, December 1985.

Timblin, L.O., P.G. Grey, B.C. Muller, and W.R. Morrison. 1988. Emergency Spillways Using Geomembranes, REC-ERC-88-1, U.S. Department of Interior, Reclamation, Denver, Colorado, April 1988.

Toledo, M. A. 1998. Safety of Rockfill Dams Subject to Overtopping, Dam Safety: Proceedings of the International Symposium on New Trends and Guidelines on Dam Safety, Barcelona, Spain; published by A. A. Balkema, Rotterdam, Netherlands.

*U.S. Army Corps of Engineers (USACE). 1990a. Hydraulic Design of Spillways, EM 1110-2-1603, Washington D.C.

*USACE. 1990b Construction with Large Stone. Engineering Manual. EM 1110-2-2302, Washington D.C.

*USACE. 1992. Design and Construction of Grouted Riprap. Engineering Technical Letter ETL 1110-2-334, August 1992.

*USACE. 1994. Hydraulic Design of Flood Control Channels. Engineering Manual. EM 1110-02-1601.

*U.S. Army Corps of Engineers. 2004. General design and construction considerations for earth and rock-fill dams. Engineering Manual. EM-1110-2-2300, Appendix C.

U.S. Department of Transportation (USDOT), FWHA, and Reclamation. 1988. Minimizing Embankment Damage During Overtopping Flow. Report Number. FHWA-RD-88-181, Washington, DC, November 1988.

*USDOT, FWHA, and Reclamation. 1989. Hydraulic Stability of Articulated Concrete Block Revetment Systems During Overtopping Flow, Report Number. FHWA-RD-89-199, Washington, DC, November 1989.

Veronese, A. 1937. Erosioni de Fondo a Valle di uno Scarico. Annali dei avori Publicci, Vol. 75, No. 9, pp. 717-726, Italy.

Visser, K., G. Hanson, D. Temple, and M. Neilsen, 2012. Earthen Embankment Overtopping Analysis Using the WinDAM B Software. Dam Safety 2012. Proceedings of the Association of State Dam Safety Officials Annual Conference, Denver, Colorado, September 16-20, 2012.

Wahl, T.L., Frizell, K.H., Cohen, E.A., 2008. Computing the Trajectory of Free Jets. ASCE Journal of Hydraulic Engineering. Technical Note, Volume 134, Number 2, February 2008.

Watershed Geosynthetics. 2013. Taking Erosion Protection to a Whole New Level. HydroTurf™ Erosion Armoring Solution Brochure.

Webster, S.L. 1979. Investigation of Beach Sand Trafficability Enhancement Using Sand-Grid Confinement and Membrane Reinforcement Concepts. Report 1, Geotechnical Laboratory, USACE Waterways Experiment Station, Vicksburg, Mississippi, Technical Report GL7920, November 1979.

Webster, S.L. 1981. Investigation of Beach Sand Trafficability Enhancement Using Sand-Grid Confinement and Membrane Reinforcement Concepts. Report 2, Geotechnical Laboratory, USACE Waterways Experiment Station, Vicksburg, Mississippi, Technical Report GL7920(2), February 1981. http://www.prestogeo.com

Webster, S.L. 1986. Sand-Grid Demonstration Roads Constructed for JLOTS II Tests at Fort Story. Virginia, Geotechnical Laboratory, USACE Waterways Experiment Station, Vicksburg, Mississippi, Technical Report GL8619, November 1986.

Webster, S.L. and J.E. Watkins. 1977. Investigation of Construction Techniques for Tactical Bridge Approach Roads Across Soft Ground. Soils and Pavements Laboratory, USACE Waterways Experiment Station, Vicksburg, Mississippi, Technical Report S771, September 1977.

Wibowo, J.L., D.E. Yule, and E. Villanueva. 2005a. Earth and Rock Surface Spillway Erosion Risk Assessment, Proceedings, 40th U.S. Symposium on Rock Mechanics, Anchorage Alaska.

Wibowo, J., D. Yule, E. Villanueva, USACE ERDC, and D. Temple, USDA, 2005b. Unlined Spillway Erosion Risk Assessment, USACE, http://www.dtic.mil/ndia/2005triservice/track5/wibowo.pdf.

Wittler, R.J. and S.R. Abt. 1990. The Influence of Uniformity on Riprap Stability. Proceedings, ASCE National Conference on Hydraulic Engineering, 251–256, 30 July-3 August 1990, San Diego, California.

Wooten, L., G.R. Powledge, and S.L. Whiteside. 1989. CCM Overtopping Protection on Three Parkway Dams. American Society of Civil Engineering, Journal of Hydraulic Engineering, pp. 1154–1157.

Wooten, R.L. and K.E. Wood. 2002. Throwing Rocks at the ½ PMF, Dam Safety 2002. Proceedings of the Association of State Dam Safety Officials Annual Conference, Tampa, Florida, September 2002.

Wright, A.G. 1998. On Common Ground, Engineering News-Record, November 9, 1998.

Yildiz, D., and E. Üzücek. 1994. Prediction of Scour Depth from Free Falling Flip Bucket Jets, International Water Power and Dam Construction, November, 1994.

Zaitsoff, Mark P. 2003.Overtopping Modifications to Tygart Dam. Proceedings, USACE Watershed Systems Conference, Portland, Oregon, May 13-15, 2003

Zou, Y. H., Q. Chen, and C.R. He. 2013. A New Large-Scale Plane-Strain Permeameter for Gravelly Clay Soil Under Stresses, ASCE Journal of Civil Engineering, 17(4), pp. 681-690.

Roller Compacted Concrete Overtopping Protection Projects (USA)

	Dam (Year Completed)	City/State	Owner/Engineer	Max Height (ft.)	RCC Volume (cu yd.)	MSA (in.)	Cement + Fly Ash (lb/cu yd.)	Max Unit Discharge (cfs/ft)	Max Overflow Height (ft)	Prime Contractor
1	Ocoee #2 (1980)	Ocoee, TN	Tennessee Valley Authority	27	4,450	-	-	-	-	
2	North Fork Toutle River (1980) Replacement service spillway	Castle Dale, WA	US Army Corps of Engineers Portland District	38	18,000	1-1/2	500 + 0	-	8	Mountain Eng. & Const. Co. Bozeman, Montana
3	Brownwood Country Club (1984)	Brownwood, TX	Brownwood Country Club Freese & Nichols	19	1,400	1-1/2	310 Type IP	24.7	5.5	Central Plains Const. Co. Shawnee Mission, Kansas
4	Spring Creek (1986)	Gunnison, CO	Colorado Div. of Wildlife Morrison-Knudsen Engineers (Now URS)	53	4,840	1-1/2	225 + 0	44.4	4.5	GEARS, Inc. Crested Butte, Colorado
5	Harris Park #1 (1986)	Bailey, CO	Harris Park Water & San. Dist. Edward Shaw	18	2,300	1-1/2	285 + 0	91	10	Pridemore Const. Co. Montrose, Colorado
6	Comanche Trail (1988)	Big Spring, TX	City of Big Spring Freese & Nichols	20	6,500	1-1/2	232 + 39	60	6	Versatile Const. Co. Logan, New Mexico
7	Addicks & Barker (1988)	Houston, TX	US Army Corps of Engineers Galveston District	48.5 & 36.5	56,700	1-1/2	292 + 244	7.1 & 10.7	2.2	Hassell Const. & Ernst Const. Co. Houston, Texas
8	Bishop Creek #2 (1989) New emergency spillway	Bishop, CA	Southern California Edison So. Cal. Edison / J.M Montgomery (Now MWH)	41	4,000	1-1/2	195 + 195	24	3	El Camino Const. Fresno, California
9	Goose Lake (1989)	Nederland, CO	City of Boulder Harza Engineering (Now MWH)	35	4,200	3	360 + 0	9.1	2.4	Nicholas Const. Co. & SLM Const. Lakewood & Grand Jct., Colorado
10	Comanche (1990) New spillway	Estes Park, CO	City of Greeley Morrison-Knudsen Engineers (Now URS)	46	3,500	1-1/2	300 + 0	101	10	ASI-RCC Buena Vista, Colorado
11	Kemmerer City (1990)	Kemmerer, WY	City of Kemmerer Woodward-Clyde Consultants (Now URS)	31	4,100	3	439 + 0	24	3.6	Nicholas Const. Co. Lakewood, Colorado
12	Thompson Park #3 (1990)	Amarillo, TX	City of Amarillo HDR Engineering	30	2,730	1-1/2	330 + 0	30	4.3	Versatile Const. Logan, New Mexico
13	White Cloud (1990)	White Cloud, MI	City of White Cloud OMM Engineering	15	1,000	3/4	250 + 190	-	1.5	Smalley Const. Scottville, Michigan
14	Ringtown #5 (1991) Combined principal and emergency spillway	Ringtown, PA	Borough of Shenandoah Gannett-Fleming	60	6,300	1-1/2	228 + 174	56	7	Mount-Joy Const. Co. Landisville, Pennsylvania
15	Saltlick (1991) Two emergency spillways	Johnstown, PA	Johnstown Water Authority Gannett-Fleming	110	11,100	1-3/4	117 + 125	54	6.6	Charles J. Merlo, Inc. Mineral Point, Pennsylvania
16	Ashton (1991)	Ashton, ID	Pacific Power-Utah Power Black & Veatch	60	7,700	3/4	300 + 100	122	12	Gilbert Western (a Kiewit Co.) Murray, Utah
17	Lake Lenape (1991)	Mays Landing, NJ	Atlantic County O'Brien & Gere	17	3,050	1	295 + 0	-	3	PHA Const. Cologne, New Jersey
18	Goose Pasture (1991)	Breckenridge, CO	Town of Breckenridge, etc. Tipton & Kalmbach (Now Stantec)	65	4,230	1-1/2	330 + 0	95	10	GEARS, Inc. Crested Butte, Colorado
19	Holmes Lake (1991)	Marshall, TX	T & P Lake, Inc. East Texas Engineering	31	2,800	2-1/2	300 + 0	-	5	Marshall Paving Co. Marshall, Texas
20	White Meadow Lake (1991)	Rockaway, NJ	White Meadow Lake Assn. O'Brien & Gere	20	1,000	1	295 + 0	-	1.4	PHA Const. Cologne, New Jersey
21	Butler Reservoir (1992)	Camp Gordon, GA	US Army Corps of Engineers Savannah District	43	9,150	1-1/2	223 + 162	137	13.2	Curry Contracting Co. Atlanta, Georgia
22	Horsethief (1992)	Rapid City, SD	Black Hills National Forest US Forest Service, Denver	65	6,250	2	325 + 0	17	4.24	GEARS, Inc. Crested Butte, Colorado
23	Meadowlark Lake (1992)	Ten Sleep, WY	Bighorn National Forest US Forest Service, Denver	28	2,550	2	325 + 0	118	10.25	ASI-RCC Buena Vista, Colorado

Roller Compacted Concrete Overtopping Protection Projects (USA)

	Dam (Year Completed)	City/State	Owner/Engineer	Max Height (ft.)	RCC Volume (cu yd.)	MSA (in.)	Cement + Fly Ash (lb/cu yd.)	Max Unit Discharge (cfs/ft)	Max Overflow Height (ft)	Prime Contractor
24	Philipsburg #3 (1992)	Philipsburg, PA	PA - American Water Co. O'Brien & Gere	20	1,400	1	295 + 0	14	6.9	
25	North Potato Creek (1992)	Copperhill, TN	Federal Bankruptcy Court Dames & Moore (Now URS)	35	4,500	1-1/2	170 + 110	340	20	Dames & Moore (Now URS) Atlanta, Georgia
26	Lake Diversion (1993) New emergency spillway	Wichita Falls, TX	City of Wichita Falls, etc. Biggs & Mathews	85	43,230	1-1/2	225 + 37	316	20.4	Central Plains Const. Shawnee Mission, Kansas
27	Lima (1993)	Dell, MT	Beaverhead Co. Red Rock River W&S District HKM Assoc. (Now DOWL HKM)	54	14,800	2	417 + 0	61	9.3	Pete's Excavating Torrington, Wyoming
28	Rosebud (1993)	Rosebud, SD	Rosebud Sioux Tribe Harza Engineering (Now MWH)	33	4,700	1	131 + 151	55	7	Pete's Excavating Torrington, Wyoming
29	Umbarger (1993)	Canyon, TX	US Fish & Wildlife Service GEI Consultants	40	28,500	1-1/2	330 + 0	216	17.5	ASI-RCC Buena Vista, Colorado
30	Ponca (1993)	Herrick, SD	Rosebud Sioux Tribe Harza Engineering (Now MWH)	35	7,700	1	200 + 170	167	16	GEARS, Inc. Crested Butte, Colorado
31	Lighthouse Hill (1993)	Altmar, NY	Niagara Mohawk Power O'Brien & Gere	18	4,700	1-1/2	295 + 0	50	6.5	Tuscarara Const. Co. Pulaski, New York
32	He Dog (1994) Combined principal & emergency spillway	Paramalee, SD	Rosebud Sioux Tribe Harza Engineering (Now MWH)	45	9,500	1	200 + 170	190	17	Pete's Excavating Torrington, Wyoming
33	Long Run (1994)	Lehighton, PA	Borough of Lehighton Gannett Fleming	28.5	3,100	1	250 + 150	15.6	2.5	KC Const. & VFL Huntington Valley, Pennsylvania
34	Lake Dorothy (1994)	Barberton, OH	PPG Industries ICF Kaiser Engineers	35	6,000	1-1/2	197 + 142	-	4	Kokosing Const. Co. Loudenville, Ohio
35	South Dam #1 (1994)	St. Clairsville, OH	City of St. Clairsville Burgess & Niple	40	2,200	1	250 + 0	16	3	Beaver Excavating Canton, Ohio
36	Anawalt (1994)	Anawalt, WV	W.Va. Dept. of Natural Resources Triad Engineering	34	3,000	2	361 + 0	61	7.83	Heeter Const. Co. & Gears Spencer, West Virginia
37	North Poudre #6 (1994)	Wellington, CO	North Poudre Irrigation Co. Smith Geotechnical	40	2,400	1	350 + 0	30	5	National Const. & Gears Boulder, Colorado
38	South Prong (1994)	Waxahachie, TX	Ellis Co., WC&I Dist #1 Freese & Nichols	62	52,000	1-1/2	210 + 105 & 270 + 0	48	6.25	Central Plains Shawnee Mission, Kansas
39	Lake Ilo (1995)	Kildeer, ND	US Fish & Wildlife Service GEI Consultants	38	3,850	1-1/2	312 + 0	58	7	Park Const. Co. & Gears Denver, Colorado
40	Lower Lake Royer (1995) Widened Principal Spillway	Fort Ritchie, MD	US Army Corps of Engineers, Baltimore District	40	10,000	1-1/2	200 + 100	44.4	6	Kiewit Const. Co. & Gears Baltimore, Maryland
41	Warden Lake (1995)	Wardensville, WV	W.Va. Dept. of Natural Resources Triad Engineering	38	3,100	1-1/2	350 + 0	127	12	Heeter Const. Co. Spencer, West Virginia
42	North Stamford (1995)	Stamford, CT	Stamford Water Co. Roald Haestad, Inc.	25	2,100	1/1/2	200 + 128	22	3.8	John J. Brennan Shelton, Connecticut
43	Big Beaver (1995)	Meeker, CO	Colorado Div. of Wildlife Boyle Engineering (Now AECOM)	92	8,600	3	325 + 0	125	10	Park Const. Co. & Gears Denver, Colorado
44	Smith Lake (1996)	Garrisonville, VA	Stafford County, Virginia Woodward Clyde Consultants (Now URS)	60	25,300	2	308 + 0	58	5.6	Branch Hwys. Roanoke, Virginia
45	Lake Throckmorton (1996)	Throckmorton, TX	City of Throckmorton Hibbs & Todd	21	3,000	1-1/2	280 + 0	-	-	Nobles Road Const. Abilene, Texas
46	Tongue River (1997) Phase II	Decker, MT	Montana Dept. of Natural Resources ESA Consultants (Now Strand)	91	58,600	2	171 + 0	167	12.5	Barnard Construction Bozeman, Montana

Roller Compacted Concrete Overtopping Protection Projects (USA)

	Dam (Year Completed)	City/State	Owner/Engineer	Max Height (ft.)	RCC Volume (cu yd.)	MSA (in.)	Cement + Fly Ash (lb/cu yd.)	Max Unit Discharge (cfs/ft)	Max Overflow Height (ft)	Prime Contractor
47	Hungry Mother (1997)	Marion, VA	Va. Dept. of Parks Dewberry & Davis / GEI Consultants	40	16,450	1-1/2	350 + 50	50	6.6	W&L Paving & Contracting Madison, Virginia
48	Douthat (1997)	Clifton Forge, VA	Va. Dept. of Parks Timmors Engineering / Schnabel Engineering	45	15,000	1-1/2	292 + 0	-	-	Branch Hwys. Roanoke, Virginia
49	Alvin J. Wirtz (1997)	Marble Falls, TX	Lower Colorado River Authority Freese & Nichols	105	160,000	1/4	230 + 230	-	14	Barnard Construction Bozeman, Montana
50	Mona (1997)	Juab County, UT	Current Co. Woodward Clyde Consultants (Now URS)	43	3,400	-	350 + 0	-	-	ASI-RCC Buena Vista, Colorado
51	C& O Canal No. 5 (1998)	Williamsport, MD	Corps of Engineers Dewberry and Davis/ GEI Consultants	20	3,900	-	180 + 180	-	-	C.J Merlo Mineral Point, Pennsylvania
52	Dulce Lake (1998)	Dulce, NM	Jicarilla Apache Tribe Benham Holway Power Group (Now Atkins)	27	-	1-1/2	325+0	-	-	Barnard Construction Bozeman, Montana
53	Left Hand Valley (1998)	Boulder, CO	St. Vrain and Left Hand Conservancy District Rocky Mountain Consultants (Now Tetra Tech)	45	4,920	1-1/2	325+0	63.9	7.9	GEARS, Inc. Crested Butte, Colorado
54	Bear Creek (1999)	Portsmouth, OH	Ohio Department of Natural Resources Fuller, Mossbarger, Scott and May (Now Stantec)	25	3,363	1-1/2	300 + 0	20.4	4.1	Lo-Debar Const. Newark, Ohio
55	Wolfden Lake (1999)	Portsmouth, OH	Ohio Department of Natural Resources Fuller, Mossbarger, Scott and May (Now Stantec)	23	2,141	1-1/2	300 + 0	32.1	3.6	Lo-Debar Const. Newark, Ohio
56	McBride (1999)	Portsmouth, OH	Ohio Department of Natural Resources Fuller, Mossbarger, Scott and May (Now Stantec)	22	1,944	1-1/2	300 + 0	20.8	2.5	Lo-Debar Const. Newark, Ohio
57	Robinson's Branch (1999)	Clark Township, NJ	Clark Township Schnabel Engineering	20	4,500	1-1/2	291 + 0	55	4.7	J.A. Alexander Inc. Belleville, New Jersey
58	Lake Tholocco (2000)	Fort Rucker, AL	U.S. Army Corps of Engineers - Mobile District Kellogg Brown & Root	36	26,000	1-1/2	275 + 50	-	6.5	Thalle Construction Mebane, North Carolina
59	Saddle Lake (2000)	Hooiser National Forest, IN	Hoosier National Forest NRCS, OH	49	9,102	-	320+0	-	8.1	T-C Inc. Indianapolis, Indiana
60	Gunnison (2000)	Gunnison, UT	Gunnison Irrigation District Jones & DeMille Engineering	35	3,700	1-1/2	350 + 0	81	9	Nordic Ind. Salt Lake City, Utah
61	Jackson Lake (2000)	Jackson County, OH	Ohio Dept. Natural Resources BBC&M Engineers	21	3,600	1-1/2	309 + 0	72	4.63	Lo-Debar Const. Newark, Ohio
62	Coal Ridge Waste (2000)	Longmont, CO	Platte Valley Irrigation Co. Rocky Mountain Consultants (Now Tetra Tech)	28	2,300	1-1/2	325 + 0	-	5	DeFalco-Lee Longmont, Colorado
63	Teter Creek (2000)	Barbour County, WV	West Virginia Dept. of Natural Resources Civil Tech Engineering	28	5,800	-	361 + 0	-	12	West Virginia Paving Grafton, West Virginia
64	Many Farms (2000)	Many Farms, AZ	US Bureau of Indian Affairs US Bureau of Reclamation	45	6,200	1-1/2	280 + 70	-	7.1	Barnard Construction Bozeman, Montana
65	Fawell (2000)	Naperville, IL	Dupage County URS Corp.	23	9,200	1-1/2	375 + 0	-	3.5	James Cape & Sons Racine, Wisconsin
66	Bunnell Pond (2000)	Bridgeport, CT	State of Connecticut Milone & MacBroom	30	10,000	1	225+0	-	-	D V Morin Construction Meriden, Connecticut
67	Black Rock (2001)	Zuni, NM	Pueblo of Zuni GEI Consultants	79	-	-	260+0	-	-	Laguna Consturction Company Laguna , New Mexico
68	Lake Blalock (2001)	Spartanburg, SC	Spartanburg Water System Black & Veatch	70	5,600	-	-	-	-	Thalle Construction Company Hillsborough, North Carolina
69	Leyden (2001)	Arvada, CO	City of Arvada, Colorado URS Corp.	43	8,900	1-1/2	425 + 0	92	8.4	ASI RCC Buena Vista, Colorado
70	McKinney (2001)	Hoffman, NC	N.C. Wildlife Resource Commission	17	1,570	1-1/2	450 + 0	47	5	Atlas Resource Management

Roller Compacted Concrete Overtopping Protection Projects (USA)

	Dam (Year Completed)	City/State	Owner/Engineer	Max Height (ft.)	RCC Volume (cu yd.)	MSA (in.)	Cement + Fly Ash (lb/cu yd.)	Max Unit Discharge (cfs/ft)	Max Overflow Height (ft)	Prime Contractor
70			URS Corp & Schnabel Engineering							Fayetteville, North Carolina
71	Vesuvius (2001)	Ironton, OH	U.S. Forest Service Bureau of Reclamation	45	10,000	1	360 + 0	35	5.7	T C Inc. Indianapolis, Indiana
72	Potato Creek No. 6 (2002)	Thomaston, GA	Upson Co. and Towaliga River Soil & Water Conservation Dist. Golder Associates	26	4,770	1-1/2	375 + 0	74	7.3	DPS Ind. Marietta, Georgia
73	Misteguay No. 4 (2002)	Flint, MI	Misteguay Creek Intercounty Drain Board Spicer Group, Inc.	39	5,655	1-1/2	330 + 0	120.6	9.3	Champagne and Marx Excavating Saginaw, Michigan
74	Caldwell Lake (2002)	Chillicothe, OH	Ohio Dept. of Natural Resources Bowser-Morner & Assoc.	35.5	5,675	1-1/2	303 + 0	33.4	3.8	Maiden & Jenkins Construction Co. Nelsonville, Ohio
75	Great Gorge (2002)	McAfee, NJ	Great Gorge Resort, Inc. Schnabel Engineering for Schoor DePalma	35	1,400	3/4	300+0	10	2.4	Van Peenen Contractors, Inc. Wayne, New Jersey
76	East Fork Above Lavon 1A (2003)	Mckinney, TX	Collin County SWCD / M & E Engineering LLC	44.5	2,953	-	-	-	-	
77	Stonelick Lake (2003)	Newtonsville, OH	Ohio DNR Bowser-Morner & Assoc.	29	4,000	2	330+0	167	7.7	Lo-Debar Const. Newark, Ohio
78	Yellow River Y-14 (2003)	Lawrenceville, GA	Gwinett County, GA Golder Associates	39.5	4,850	1-1/2	250+250	82	7.4	Thalle Construction Hillsborough, North Carolina
79	Willowdale Lake (2003)	Akron, OH	Willowdale Homeowners Assoc. Burgess Niple	27.3	2,500	1	300+0	-	7.5	Great Lakes Const. Co.
80	Sweet Arrow (2003)	Pineview, PA	Schuykill County WJP Engineers	33.5	4,500	1	-	-	7	K.C. Construction Co. Ivyland, Pennsylvania
81	Lake Hauto (2003)	Nesquehoning, PA	Lake Hauto Homeowners Assoc. O'Brian & Gere	-	15,000	-	-	-	-	No. 1 Consturction Co. Ashley, Pennsylvania
82	Tanglewood Lake (2003)	Geauga, OH	Homeowners Assoc. BBC&M Engineers	37.4	4,000	1	300+0	104.4	7	C J Natale, Inc. Hudson, Ohio
83	Paulins Kill (2003)	Stillwater, NJ	Community of Stillwater, NJ Malcolm Pirnie (Now ARCADIS)	13	2,500	-	-	-	-	Ritacco Construction Belleville, New Jersey
84	East Fork Above Lavon 3C (2003)	McKinney, TX	Collin County SWCD M & E Engineering	44.5	2,950	-	-	-	-	Jester Brothers Const. Whitewright, Texas
85	Hackberry Draw 1 (2003) (auxiliary spillway)	Carlsbad, NM	Hackberry Draw Watershed Board / NRCS - New Mexico	-	13,055	-	157 + 78	-	-	
86	Brunswick Lake (2004)	Brunswick, OH	City of Brunswick, OH MS Consultants	16.4	2,320	2	-	35.9	4.1	Lo-Debar Const. Newark, Ohio
87, 88	Bear Creek #11 & #12 (2004) (auxiliary spillways)	Goldsboro, NC	NRCS, North Carolina NRCS, North Carolina	23 & 19	2,538 + 885	1-1/2	210+210	-	-	Thalle Construction Hillsborough, North Carolina
89	Yellow River #17 (2005)	Gwinnett County, GA	Gwinnett County, GA USACE - Savannah District + Golder Assoc.	30	6,700	-	-	34.5	-	ASI Constructors Pueblo West, Colorado
90	Marrowbone #1 (2005)	Ridgeway, VA	NRCS, Virginia Schnabel Engineering	46	10,600	1-1/2	280+190	143.4	12.9	ASI Constructors Pueblo West, Colorado
91	Locust Lake (2005)	Hope, NJ	John P. Neufville Schnabel Engineering for French & Perillo	25	1,600	3/4	350+0	33	4.8	GEARS, Inc. Coloradolorado Springs, Colorado
92	Marilla (2007)	Bradford, PA	Bradford City Water Authority GAI Consultants	-	8,500	1	400+0	-	-	Bob Cummins Const. Bradford, Pennsylvania
93, 94	Deegan and Hinkle (2007) (two dams)	Bridgeport, WV	City of Bridgeport, WV Civil Tech Engineering	-	4,300	1	360+0	-	-	Kanawba Stone, Inc. Poca, West Virginia
95, 96	Yellow River Y15 and Y16 (2008)	Gwinnett County, GA	Gwinnett County, GA Golder Assoc. (Y15), Schnabel Engineering (Y16)	-	12560 + 3,000			-	-	ASI Constructors Pueblo West, Colorado

Roller Compacted Concrete Overtopping Protection Projects (USA)

	Dam (Year Completed)	City/State	Owner/Engineer	Max Height (ft.)	RCC Volume (cu yd.)	MSA (in.)	Cement + Fly Ash (lb/cu yd.)	Max Unit Discharge (cfs/ft)	Max Overflow Height (ft)	Prime Contractor
97	Poe Valley (2008)	Centre County, PA	Pennsylvania Dept. of Cons. & Natural Resources Schnabel Engineering	30	15,600	1-1/2	400+0	35	5	Jay Fulkroad & Sons, Inc. McAlisterville, Pennsylvania
98	Sallisaw Creek Site 16 (2009)	Stilwell, OK	Adair County Conservation District / NRCS - Oklahoma	47	6,111	1-1/2	362*	60.15	6.68	C. Watts Construction Oklahoma City, Oklahoma
99	Thorn Run (2010)	Butler, PA	PA American Water Co. Gannett-Fleming	42	14,070	1-1/2	200+200	54.3	7	Joseph B. Fay & ASI Tarentum, Pennsylvania
100	Bear Creek (2011)	Wise, VA	Town of Wise, VA Schnabel Engineering for Thompson & Litton	45	5,400	2	250+150	59	6.1	Estes Brothers Jonesville, Virginia
101	Big Haynes Brushy Fork #3 H3 (2011)	Grayson, GA	Gwinnett County, GA Golder Associates	-	-	-	-	-	-	ASI Constructors Preblo West, Colorado
102	Dutch Fork (2011)	Donegal Township, PA	Pennsylvania Dept. of Cons. & Natural Resources Micheal Baker	42	7,500	1	400+0	-	-	Golden Triangle Imperial, Pennsylvania
103	Fox Creek #4 (2011)	Flemingsburg, KY	Fox Creek Watershed Cons. District Schnabel Engineering	49	11,000	1-1/2	200+200	128	9.8	Joseph B. Faye Russelton, Pennsylvania
104	Stoney Creek (2011)	Bedford, VA	City of Bedford, VA Schnabel Engineering for Thompson & Litton	56	10,000	2	250+150	76	9	Morgan Corporation Spartanburg, South Carolina
105	T Nelson Elliott (2011)	Manassas, VA	City of Manassas, VA URS Corp.	74	8,580	1-1/2	350+0	90	9.5	ASI Constructors Pueblo West, Colorado
106	Wisecarver (2011)	Waynesburg, PA	Southwestern Pennsylvania Water Authority D'Appolonia	40	-	-	-	-	-	
107	Lake Oneida (2012)	Butler Co., PA	Pennsylvania American Water Schnabel Engineering	33	14,150	1	300+100	60	10	KC Construction Ivyland, Pennsylvania
108	Lower Owl Creek (2012)	Tamaqua, PA	Pennsylvania Fish & Boat Comm. Schnabel Engineering for Alfred Benesch & Co.	33	3,000	1-1/2	450(1S)+0	48	4.9	Performance Construction Services Harrisburg, Pennsylvania
109	Nesbitt (2012)	Lackawana County, PA	Pensylvania American Water Gannett Fleming	101	38,000	1-1/2	200+200	120.5	12.58	ASI Constructors Pueblo West, Colorado
110	West Reservoir (2012)	Akron, OH	Ohio Department of Natural Resources	21.5	2,400	2	250+120	9	3.4	Kenmore Construction Co. Akron, Ohio
111	Caney Coon Site 2 (2013)	Coalgate, OK	City of Coalgate and Coal County Conservation District / URS	53.4	8,820	1-1/2	203 + 68	86.69	7.9	Wynn Construction Oklahoma City, Oklahoma
112	New Creek #14 (2013)	Keyser, WV	NRCS - West Virginia Gannett Fleming	114	26,000	1-1/2	200+200	140	13	Heeter Construction/ASI RCC Spencer, West Virginia
113	Mountain Creek #10 (2014)	Midlothian, TX	Dalworth S & W Conservation District and Ellis County / NRCS - Texas	46	11,974	-	-	-	-	ASI Constructors Pueblo West, Colorado
114	Pike Lake (2014)	Bainebridge, OH	Ohio Department of Natural Resources	22	67,200	-	-	28.2	3.2	Trucco Construction Delaware, Ohio
115	Pond Lick Lake (2014)	Pike County, OH	Ohio Department of Natural Resources	25	5,355	-	-	42.4	6	Sunesis Construction Co. West Chester, Ohio
116	Renwick (2014) (RCC spillway and RCC road)	PembinaCo., ND	Pembina Co Water Resource District / NRCS - North Dakc	49	19,718 air entrained	1-1/2	377 + 94	110	11.1	RSCI Group Meridian, ID (Prim Meridian, Idaho
117	Roosevelt Lake (2014)	Scroto County, OH	Ohio Department of Natural Resources	19.5	5,300	-	-	140	8.9	Sunesis Construction Co. West Chester, Ohio
118	Tuscarawas River Diversion (2014)	South Akron, OH	Ohio Department of Natural Resources	29	12,500	1.5	250+120	21	15.1	Kenmore Construction Co. Akron, Ohio
119	Santa Ana Detention (2014) (auxiliary spillway)	Santa Ana Pueblo, NM	Pueblo of Santa Ana Ayers Associates	22.7	5,500	-	-	-	-	

FEMA

FEMA P-1015
Catalog No. 14134-1