Training
Aids for
Dam
Safety

MODULE:

INSPECTION OF SPILLWAYS AND OUTLET WORKS

TADS

A video presentation accompanies this workbook.

Training
Aids for
Dam
Safety

MODULE:

INSPECTION OF SPILLWAYS AND OUTLET WORKS

Subject-Matter-Expert Panel (Spillways)

Alan D. Wood
Soil Conservation Service
Co-Chairman

Leland D. Anderson
Corps of Engineers

Harold K. Blair
Bureau of Reclamation

Dennis R. Dickey
Association of State Dam Safety Officials
(State of Pennsylvania)

Noel Folsom
Federal Energy Regulatory Commission

David G. Hegseth
Tennessee Valley Authority

Subject-Matter-Expert Panel (Outlet Works)

Steve Higinbotham
Bureau of Reclamation
Co-Chairman

Glenn R. Drummond
HQUSACE Corps of Engineers

James D. Simons
Association of State Dam Safety Officials
(State of North Carolina)

Ron Rysdam
Federal Energy Regulatory Commission

Joseph E. Hanson
Soil Conservation Service

PREFACE

There are presently more than 80,000 dams in use across the United States. Like any engineering works, these dams require continual care and maintenance, first to ensure that they remain operational and capable of performing all intended purposes, and then to preclude endangering people and property downstream.

The safety of all dams in the United States is of considerable national, state, and local concern. Given that, the principal purpose of the TADS (Training Aids for Dam Safety) program is to enhance dam safety on a national scale. Federal agencies have responsibility for the safe operation, maintenance, and regulation of dams under their ownership or jurisdiction. The states, other public jurisdictions, and private owners have responsibility for the safety of non-Federal dams. The safety and proper custodial care of dams can be achieved only through an awareness and acceptance of owner and operator responsibility, and through the availability of competent, well-trained engineers, geologists, technicians, and operators. Such awareness and expertise are best attained and maintained through effective training in dam safety technology.

Accordingly, an ad hoc Interagency Steering Committee was established to address ways to overcome the paucity of good dam safety training materials. The committee proposed a program of self-instructional study embodying video and printed materials and having the advantages of wide availability/marketability, low per-student cost, limited or no professional trainer involvement, and a common approach to dam safety practices.

The 14 Federal agencies represented on the National Interagency Committee on Dam Safety fully endorsed the proposed TADS program and have underwritten the cost of development. They have also made available technical specialists in a variety of disciplines to help in preparing the instructional materials. The states, through the Association of State Dam Safety Officials, also resolved to support TADS development by providing technical expertise.

The dam safety instruction provided by TADS is applicable to dams of all sizes and types, and is useful to all agencies and dam owners. The guidance in dam safety practice provided by TADS is generally applicable to all situations. However, it is recognized that the degree to which the methods and principles are adopted will rest with the individual agency, dam owner, or user. The sponsoring agencies of TADS assume no responsibility for the manner in which these instructional materials are used or interpreted, or the results derived therefrom.

ACKNOWLEDGMENTS

TADS STEERING COMMITTEE

James R. Graham, Bureau of Reclamation, Chairman
Arthur H. Walz, Corps of Engineers
William S. Bivins, Federal Emergency Management Agency
Donald L. Basinger, Soil Conservation Service
Joseph J. Ellam, Association of State Dam Safety Officials (Commonwealth of Pennsylvania)
Marshall L. Silver, U.S. Committee on Large Dams

TADS PROJECT MANAGER

Chris J. Veesaert, Bureau of Reclamation

TADS TECHNICAL ACTIVITIES COMMITTEE

Robert L. James, Corps of Engineers, Chairman
Norman Miller, Soil Conservation Service, Vice Chairman
Chris J. Veesaert, Bureau of Reclamation
Harold C. Buttrey, Tennessee Valley Authority
Constantine G. Tjoumas, Federal Energy Regulatory Commission
Alan E. Pearson, Association of State Dam Safety Officials (State of Colorado)

TADS SPONSORS (Representing the Interagency Committee on Dam Safety)

Bureau of Reclamation
Corps of Engineers
Federal Emergency Management Agency
Soil Conservation Service
Federal Energy Regulatory Commission
Tennessee Valley Authority
Forest Service
Bureau of Land Management
National Park Service
Bureau of Indian Affairs
Fish and Wildlife Service
Department of Energy
Nuclear Regulatory Commission
International Boundary and Water Commission

TADS SUPPORTING ORGANIZATIONS

Association of State Dam Safety Officials
U.S. Committee on Large Dams

TABLE OF CONTENTS

Page

MODULE INTRODUCTION i

UNIT I. INTRODUCTION TO SPILLWAYS AND OUTLET WORKS

OVERVIEW I-1
Introduction I-1
Unit Objectives I-1

FUNDAMENTALS I-2
Introduction I-2
Functions Of Spillways And Outlet Works I-2
Function Of Spillways I-2
Distinguishing Spillways From Outlet Works I-3
Spillway Use Classifications I-3
Functions Of Outlet Works I-6
Purpose Classifications I-6
Structural Configuration Classifications I-7
Hydraulic Operation Classifications I-7
Combinations Of Spillways And Outlet Works I-7
Importance Of Spillways And Outlet Works For Dam Safety I-8
Consequences Of Spillway Or Outlet Works Failure I-8
Importance Of Spillway And Outlet Works Inspection I-9

COMPONENTS I-10
Introduction I-10
Spillway Components I-10
Component Configuration I-10
Merged-Component Spillway Designs I-12
Tube Spillways I-12
Drop Spillways I-12
Outlet Works Components I-14

UNIT EXERCISE I-15

SUMMARY I-20

UNIT II. GENERAL PROBLEMS AND DEFICIENCIES

OVERVIEW II-1
Introduction II-1
Unit Objectives II-1

Continued . . .

TABLE OF CONTENTS

Page

UNIT II. GENERAL PROBLEMS AND DEFICIENCIES (Continued)

MATERIAL PROBLEMS II-2
Materials Module II-2
Concrete Problems Common In Spillways And Outlet Works II-2
Cracking II-2
Surface Defects II-3
Honeycomb II-4
Stratification II-4
Form Slippage II-4
Stains II-4
Impact Damage II-4
Concrete Deterioration: Cavitation II-4
Concrete Deterioration: Erosion II-6
Leaking Joints II-6
Inadequate Or Damaged Waterstops II-6
Other Joint Problems II-7
Metal Problems Common In Spillways And Outlet Works II-9
Corrosion (Rust, Galvanic Action) II-9
Fatigue II-9
Erosion II-9
Tearing And Rupture II-9
Cavitation II-9
Cracking II-10
Deformation II-10

OBSTRUCTIONS II-11
Defining Spillway And Outlet Works Obstructions II-11
Significance Of Obstructions II-11
Causes Of Obstructions II-11

MISALIGNMENT II-14
Small-Scale Misalignment II-14
Defining Small-Scale Misalignment II-14
Significance Of Small-Scale Misalignment II-15
Large-Scale Misalignment II-15
Defining Large-Scale Misalignment II-15
Causes Of Large-Scale Misalignment II-15

FOUNDATION/BACKFILL PROBLEMS II-16
Defining Foundation And Backfill Problems II-16
Factors In Foundation And Backfill Problems II-16

Continued . . .

TABLE OF CONTENTS

Page

UNIT II. GENERAL PROBLEMS AND DEFICIENCIES (Continued)

SEEPAGE II-17
Defining Seepage II-17
Significance Of Seepage II-17

POOR DRAINAGE II-19
Weepholes And Drains II-19

UNIT EXERCISE II-21

SUMMARY II-25

UNIT III. INSPECTION GUIDELINES

OVERVIEW III-1
Introduction III-1
Unit Objectives III-1

INSPECTION PLANNING III-2
Scheduling Factors III-2
Special Inspections III-2

DOCUMENT REVIEW III-3
Data Sources III-3
Previous Problem Areas III-3
Current Problem Areas III-3
Known Deficiencies Or Potential Problems III-3

CONDUCTING INSPECTIONS III-6
Introduction III-6
Tools And Equipment III-6
Good Inspection Techniques III-7
Inspection Reporting III-8

PERSONAL SAFETY CONCERNS III-9
Special Safety Concerns When Inspecting Spillways And Outlet Works . . . III-9

REMEMBER TO "SMPL" III-10

UNIT EXERCISE III-11

SUMMARY III-15

Continued . . .

TABLE OF CONTENTS

Page

UNIT IV. INSPECTING THE COMPONENTS

OVERVIEW IV-1
Introduction IV-1
Unit Objectives IV-1

ENTRANCE CHANNEL IV-2
What Is The Entrance Channel? IV-2
Non-Submerged Entrance Channels IV-2
Types Of Non-Submerged Entrance Channels IV-2
Elements Of A Non-Submerged Entrance Channel IV-2
Typical Problems With Non-Submerged Entrance Channels IV-4
Submerged Entrance Channels IV-8
Typical Problems With Submerged Entrance Channels IV-9

INTAKE STRUCTURE. IV-11
What Is The Intake Structure? IV-11
Types Of Intake Structures IV-11
Intake Structures For Concrete Dams IV-11
Risers IV-11
Drop Inlets IV-11
Submerged Intake Structures IV-12
Tower Intake Structures IV-13
Inclined Intake Structures IV-14
Auxiliary Intakes IV-15
Inspecting Intake Structure Elements IV-15
Problems Common To All Types Of Intake Structures IV-15
Access Bridge To Intake Structure IV-16
Stoplogs IV-16
Bulkheads IV-17
Assessing The Adequacy Of A Bulkhead IV-18
Inspecting The Bulkhead For Operational Deficiencies IV-18
Making Bulkhead Recommendations In Your Report IV-18
Trashracks IV-19
Fishscreens IV-21
Ice Prevention Systems IV-21
Shaped Entrances IV-22
Entrance Transitions IV-22
Guard Or Regulating Gates Or Valves IV-22

EXERCISE IV-23

Continued . . .

TABLE OF CONTENTS

Page

UNIT IV. INSPECTING THE COMPONENTS (Continued)

CONTROL SECTION IV-27
What Is The Spillway Control Section? IV-27
Types Of Spillway Control Sections IV-28
Unlined Control Sections IV-28
Lined Control Sections IV-30
Fuseplug Control Sections IV-30
Types Of Structures Used In The Spillway Control Section IV-32
Weir Or Sill IV-32
Orifice IV-35
Tube Or Pipe IV-36
Gates IV-37
Stoplogs And Flashboards IV-38
Ancillary Equipment IV-39
Typical Problems With The Spillway Control Section IV-40
What Is The Outlet Works Gate Or Valve Housing? IV-42
Typical Problems In The Gate Or Valve Housing Area IV-43
Upstream Transition Problems IV-43
Gate Or Valve Housing Problems IV-44
Downstream Transition Problems IV-44

EXERCISE IV-45

VIDEO SEGMENT #1 . . . . . IV-49

WATER CONVEYANCE IV-50
What Is The Discharge Channel? IV-50
Elements Of The Discharge Channel IV-51
Typical Problems With The Discharge Channel IV-51
What Are Conduits And Tunnels? IV-53
Conduits IV-56
Implications Of Outlet Works Gate Or Valve Location IV-56
External Inspection Procedures For Conduits IV-57
Internal Inspection Procedures For Conduits IV-58
Tunnels IV-63

VIDEO SEGMENT #2 . . . . . IV-64

Continued . . .

TABLE OF CONTENTS

Page

UNIT IV. INSPECTING THE COMPONENTS (Continued)

ENERGY DISSIPATION SECTION IV-65
What Is The Energy Dissipation Section? IV-65
Energy Dissipation Structures IV-65
Baffles IV-65
Steps IV-67
Flip Bucket IV-68
Stilling/Hydraulic Jump Basin IV-69
Control Valve IV-71
Impact Basin IV-71
Stilling Well IV-72
Plunge Pool IV-72
Apron IV-73
Inspecting The Energy Dissipation Section IV-73
Typical Problems With The Energy Dissipation Section IV-73

RETURN CHANNEL IV-77
What Is The Return Channel? IV-77
Types Of Return Channels IV-77
Elements Of The Return Channel IV-78
Typical Problems With The Return Channel IV-78

EXERCISE IV-79

SUMMARY IV-87

VIDEO SEGMENT #3 . . . . . IV-90

FINAL REVIEW EXERCISE 1

APPENDIXES
Appendix A. Glossary A-1
Appendix B. References B-1

LIST OF FIGURES AND TABLES

FIGURE #	TITLE	Page
I-1	Primary And Auxiliary Spillways	I-2
I-2	Dam With An Outlet Works	I-6
I-3	Dam With Adjacent Primary And Auxiliary Spillways	I-7
I-4	Components: Open Channel Spillway	I-11
I-5	Components: Closed Spillway	I-12
I-6	Drop Spillways	I-13
I-7	Components: Outlet Works	I-14
II-1	Waterstop	II-7
II-2	Open Joints In Spillway Channel	II-8
II-3	Spillway Obstructions	II-13
II-4	Offset Resulting From Differential Movement	II-14
II-5	Example Of A Piping Failure	II-17
II-6	Weephole	II-19
II-7	Signs Of Poor Drainage	II-20
IV-1	Typical Non-Submerged Entrance Channels	IV-3
IV-2	Wave Erosion	IV-6
IV-3	Examples Of Trash Booms	IV-7
IV-4	Submerged Entrance Channel	IV-8
IV-5	Dam With Submerged Intake Structure	IV-12
IV-6	Tower Intake With Bridge	IV-13
IV-7	Inclined Intake Structure	IV-14
IV-8	Intake Structure With Bulkhead	IV-17
IV-9	Trashrack	IV-20
IV-10	Control Section Features	IV-27
IV-11	Typical Unlined Auxiliary Spillway	IV-29
IV-12	Fuseplug Control Section	IV-31
IV-13	Weir Length Configurations	IV-32
IV-14	Bathtub Weir Inlet	IV-33
IV-15	Weir Profiles	IV-34
IV-16	Drop Inlet	IV-35
IV-17	Tube Control: Culvert And Siphon	IV-36
IV-18	Typical Spillway Gates	IV-37
IV-19	Stoplogs And Flashboards	IV-38
IV-20	Equipment (Or Operating) Bridge	IV-39
IV-21	Side Channel Control And Discharge Channel	IV-50
IV-22	Conduit Through An Embankment Dam	IV-53
IV-23	Conduit Through A Concrete Dam	IV-54
IV-24	Tunnel Spillway	IV-55
IV-25	Crack Map	IV-59
IV-26	Opened Conduit Joint	IV-61

Continued . . .

LIST OF FIGURES AND TABLES

FIGURE #	TITLE	Page
IV-27	Cracked Penstock Supports	IV-62
IV-28	Baffles	IV-65
IV-29	Baffled Apron Drop	IV-66
IV-30	Steps	IV-67
IV-31	Flip Bucket	IV-68
IV-32	Stilling/Hydraulic Jump Basin	IV-70
IV-33	Impact Basin	IV-71
IV-34	Stilling Well	IV-72
IV-35	Plunge Pool	IV-72
IV-36	Composite Of Return Channel Linings	IV-77

TABLE #		
I-1	Spillway Definitions	I-4
IV-1	Inspecting Non-Submerged Entrance Channel Materials	IV-4
IV-2	Inspecting Energy Dissipator Materials	IV-74

MODULE INTRODUCTION

INSPECTION OF SPILLWAYS AND OUTLET WORKS

MODULE INTRODUCTION

OVERVIEW OF THE MODULE

In this module, you will learn the recommended methods for inspecting spillways and outlet works and for detecting deficiencies. You will learn about the specific deficiencies that may be present in various types of spillways and outlet works and the impact these deficiencies can have on the safety of the dam. In addition, you will be provided with guidance on selecting the appropriate actions to be taken when deficiencies are observed.

OBJECTIVES

At the completion of this module, you will be able to:

- Describe spillway and outlet works terminology, functions, classifications, and configurations.
- List major spillway and outlet works components.
- List the various structures or features used in spillways and outlet works and describe the function served by each structure or feature.
- Inspect the entrance, intake, control, water conveyance, energy dissipation, and return components of spillways and outlet works.
- Identify the following types of deficiencies:
  - Deterioration of materials
  - Obstructions
  - Slope and wall failure
  - Unstable channel floors
  - Defective joints
  - Misalignment
  - Abnormalities on flow surfaces
  - Drainage problems
  - Foundation and backfill problems
  - Damaged or missing equipment
- Explain the potential consequences of each type of deficiency for the spillway or outlet works and for the dam.
- Select the appropriate actions to take if deficiencies are observed.

MODULE INTRODUCTION

HOW TO USE THIS MODULE

This module is designed to be used in conjunction with other Training Aids for Dam Safety (TADS) modules. The TADS Learner's Guide lists all of the TADS modules and presents a recommended sequence for completing the modules. You may want to review the Learner's Guide before completing this module.

It would be helpful if you have completed the following modules before beginning this module:

- Preparing To Conduct A Dam Safety Inspection
- Documenting And Reporting Findings From A Dam Safety Inspection
- Inspection Of Embankment Dams
- Inspection Of Concrete and Masonry Dams

CONTENTS OF THIS MODULE

This module is divided into four units, followed by two appendixes:

- **Unit I. Introduction To Spillways And Outlet Works:** Presents information on the functions, configurations, components, and typical features of spillways and outlet works.

- **Unit II. General Problems And Deficiencies:** Identifies problems common throughout a spillway or outlet works.

- **Unit III. Inspection Guidelines:** Provides instruction on inspection planning, equipment, techniques, and reporting.

- **Unit IV. Inspecting The Components:** Provides instruction on identifying deficiencies associated with specific spillway and outlet works components.

- **Appendix A. Glossary:** Defines a number of technical terms used in the module.

- **Appendix B. References:** Lists recommended references that can be used to supplement this module.

DESIGN OF THIS MODULE

This module is a self-paced instructional package. You may move through it as slowly or as rapidly as is comfortable for you. You may stop and review the material at any time. Since the module is designed for independent study, you may take breaks whenever you wish.

Continued . . .

DESIGN OF THIS MODULE (Continued)

There are several components of this module that are designed to help you master the material being presented. These components include:

- Text Instruction
- Unit Exercises
- Video Presentation
- Final Review Exercise

We will now look at how you will use each component individually.

Text Instruction

The text instruction is presented in this workbook. Always begin by reading the text instruction, since it explains how to proceed through a given block of instruction.

As you read the text instruction, you will notice that every page has a header. The header is designed to let you know where you are in the module. Let's look at how information is presented in the header.

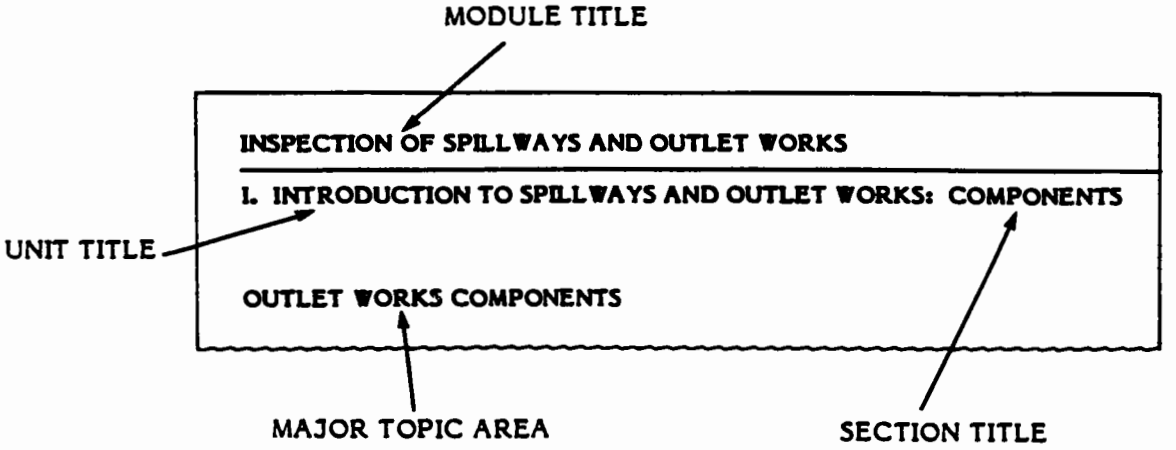

Unit Exercises

Most units include exercises to help you determine how well you are mastering the information presented. These exercises are **not** tests and will not be used to grade you or to rate your performance. Rather, the exercises are tools to help you assess your own learning.

Instructions for completing the exercises appear at the beginning of every exercise. Answers to the exercises are presented immediately following each exercise.

MODULE INTRODUCTION

Video Presentation

Three video presentations are included in this module. The text will tell you when to watch each video segment. After viewing each video segment, return to the text. You may watch the video presentations as many times as you find helpful.

NOTE: The three video segments are contained on one videocassette. Therefore, do not rewind the tape until you have seen all three segments.

Final Review Exercise

After reading the text instruction and watching the video segments, you will complete a final review exercise. The final review exercise is designed to help you determine how much you have learned from the module. The final review exercise will not be used to grade you or to judge your performance.

Instructions for completing the final review exercise are presented at the beginning of the exercise. After completing the final review exercise, check your answers against those presented in the answer key. The answer key is located immediately after the final review exercise.

If you miss several of the questions, you may want to review the page numbers or video segments referenced in the answer key. If you get most of the questions correct, you are ready to begin another module.

REQUIRED MATERIALS

To complete this module, you will need the following materials:

- This workbook and a pencil or pen
- The accompanying videocassette and a videotape player

You may want to find a quiet place to work while you study these materials.

UNIT I

INTRODUCTION TO SPILLWAYS AND OUTLET WORKS

I. INTRODUCTION TO SPILLWAYS AND OUTLET WORKS: OVERVIEW

INTRODUCTION

The first unit of the Inspection Of Spillways And Outlet Works module will introduce you to . . .

- **Fundamentals**
  - Functions of spillways and outlet works
  - Spillway and outlet works configurations
  - Importance of spillways and outlet works for dam safety
- **Components**
  - Component categories applicable to all structures
  - Spillway components
  - Outlet works components

If you are new to dam safety inspection, the material presented in this unit will provide important background information. If you have experience with spillways and outlet works, this unit will provide a brief refresher on key terminology used in their inspection. Since terminology can differ from organization to organization, you may find it helpful to review this section to become familiar with how terms will be used in this module.

UNIT OBJECTIVES

After completing this unit, you will be able to . . .

- List major causes of dam failures involving spillways and outlet works.
- Name and describe spillway and outlet works components.

I. INTRODUCTION TO SPILLWAYS AND OUTLET WORKS: FUNDAMENTALS

INTRODUCTION

This section provides background information on the functions and configurations of spillways and outlet works. This section also describes the importance of spillways and outlet works to the overall safety of a dam.

FUNCTIONS OF SPILLWAYS AND OUTLET WORKS

Function Of Spillways

The function of spillways is to pass normal and/or flood water in a manner that protects the structural integrity of a dam. During dam design, engineers calculate the maximum flood event the dam structure will be expected to withstand. This calculation is used to design the spillway, to ensure that it will have the capacity to release the maximum flood volume safely from the reservoir.

A dam may have one spillway or multiple spillways. Spillways are built using various designs to serve different purposes. Figure I-1 shows an illustration of a dam with primary and auxiliary spillways.

FIGURE I-1. PRIMARY AND AUXILIARY SPILLWAYS

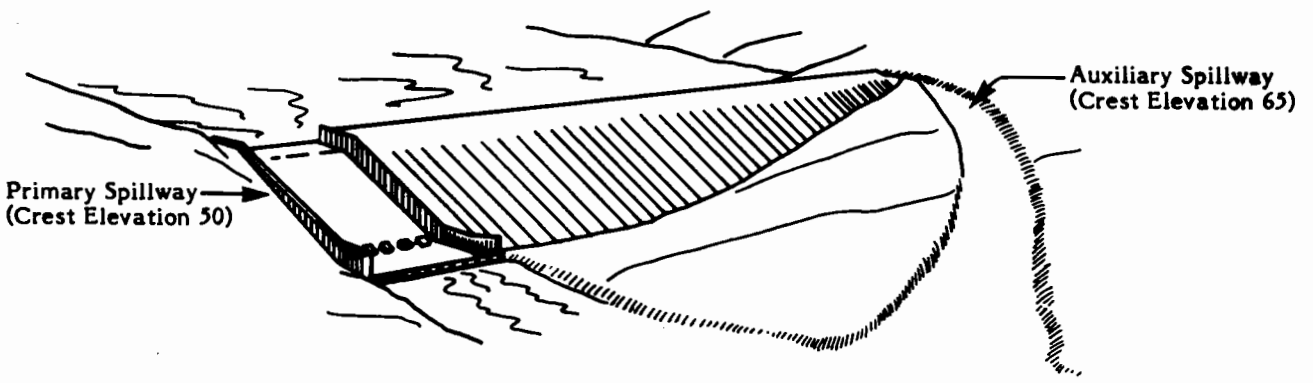

I. INTRODUCTION TO SPILLWAYS AND OUTLET WORKS: FUNDAMENTALS

Distinguishing Spillways From Outlet Works

No definite dividing line can be drawn between outlet works and spillways. In general, a pressurized, gate- or valve-controlled conduit that carries water through a dam is considered an outlet works rather than a spillway.

Spillways and outlet works may share many features, and can even be combined into one structure. A dam created with mine tailings, for example, often has only a conduit through the dam for passing water. On more elaborate dams, a combined structure may have separate outlet works and spillway portions, with each portion having separate means of intake and control.

Different organizations may vary in labeling these combined structures, but inspection of outlet works is very similar to inspection of spillways.

Spillway Use Classifications

Spillways often are classified according to the expected **frequency of use.** The following common classifications may be used:

- Frequent Use: Primary, Principal, or Service spillways.
- Infrequent Use: Auxiliary or Emergency spillways.

Continued . . .

Spillway Use Classifications (Continued)

Table I-1 lists definitions found in various sources which describe these types of spillways. No attempt was made to reword these definitions or make them consistent with one another. Note how terminology can vary.

TABLE I-1. SPILLWAY DEFINITIONS

Terms	Definitions
Primary Spillway Also called . . . Principal Spillway (Drop Inlet Structure)	• The main spillway for normal and flood flows. • The principal or first-use spillway during flood flows. • The principal spillway generally carries all flows up to the emergency spillway. • A device used to provide continuous or controlled releases from a reservoir. The definition used in this module is as follows: A primary spillway is used for normal operation and is the spillway used first during flood flows. The primary spillway is constructed of durable material, and is designed to withstand frequent use without significant damage to itself or the dam.

Continued . . .

Spillway Use Classifications (Continued)

TABLE I-1. SPILLWAY DEFINITIONS
(Continued)

Terms	Definitions
Auxiliary Spillway Also called . . . Emergency Spillway	• A secondary spillway designed to operate only during exceptionally large floods. • A device that is designed to provide additional protection against overtopping of dams and is intended for use under extreme conditions such as extreme flooding or misoperation or malfunction of the service spillways or other emergency conditions. The definition used in this module is as follows: An auxiliary spillway is a secondary spillway that passes floodwater during rare, severe flooding, and in some cases may be expected to need extensive repair after such events. Many auxiliary spillways have never been used.
Service Spillway	• A principal spillway used to regulate reservoir releases additional to, or in lieu of, an outlet.

I. INTRODUCTION TO SPILLWAYS AND OUTLET WORKS: FUNDAMENTALS

Functions Of Outlet Works

An outlet works is the normal means of releasing water impounded by a dam. Outlet works can be classified using three different criteria: purpose, structural configuration, and hydraulic operation.

Purpose Classifications

Typical purposes served by an outlet works include:

- Normal release for irrigation, hydroelectric power generation, and municipal and industrial use
- Stream bypass for minimum release requirements
- Reservoir drainage

A particular outlet works may serve more than one of the purposes listed above. The size, location, type, and design of the outlet works are influenced by the purpose(s) it is intended to serve. Figure I-2 shows an embankment dam with a simple outlet works combined with an auxiliary spillway.

FIGURE I-2. DAM WITH AN OUTLET WORKS

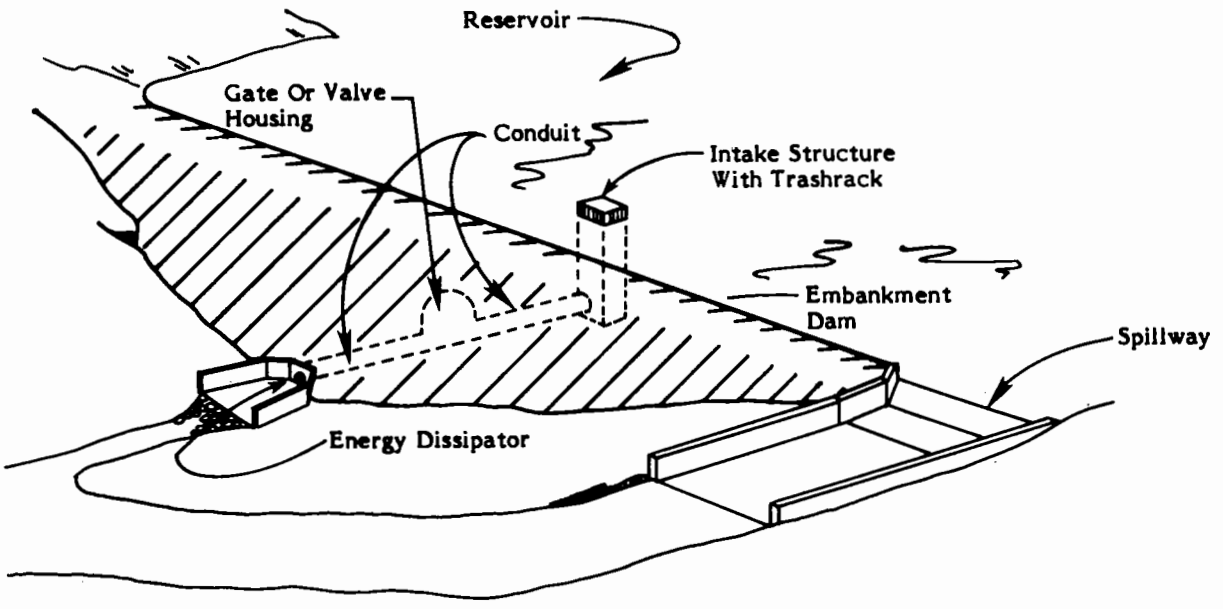

I. INTRODUCTION TO SPILLWAYS AND OUTLET WORKS: FUNDAMENTALS

Structural Configuration Classifications

Outlet works can also be classified according to the structural configuration of their dominant feature: the waterway. An outlet works waterway can be . . .

- Conduit through a concrete dam.
- Conduit through an embankment dam.
- Carrier pipe or penstock resting on supports within a larger conduit.
- Exposed pipeline or penstock carried on supports.
- Conduit within a tunnel excavated through in situ material, usually away from the dam.

Hydraulic Operation Classifications

An outlet works can also be classified according to its hydraulic operation. It may be gated or ungated, and flow as a pressure pipe or a free-flow pipe. The location of regulating gates or valves is the major factor determining the hydraulic characteristics of the outlet works. Depending on whether gates are upstream, midstream, or downstream, a closed conduit or tunnel may flow under pressure for all or part of its length, or it may be a free-flow waterway. Pressure characteristics of a waterway are also influenced by the geometry of the intake and conduit.

Combinations Of Spillways And Outlet Works

Spillways may be constructed adjacent to one another, in combination with an outlet works. Figure I-3 shows adjacent primary and auxiliary spillways, one with a gated control, and an outlet works under a control house.

FIGURE I-3. DAM WITH ADJACENT PRIMARY AND AUXILIARY SPILLWAYS

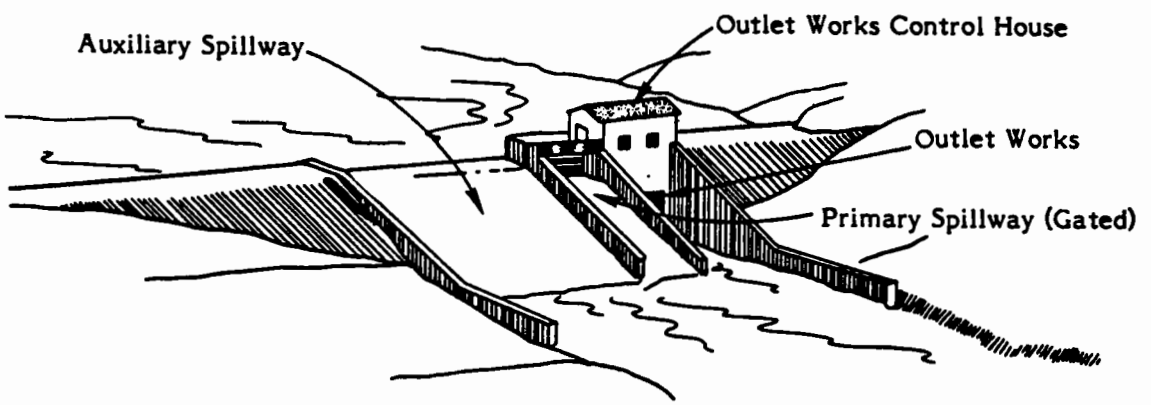

Spillway and outlet works configurations vary so widely that the many different combinations would be difficult to list.

I. INTRODUCTION TO SPILLWAYS AND OUTLET WORKS: FUNDAMENTALS

IMPORTANCE OF SPILLWAYS AND OUTLET WORKS FOR DAM SAFETY

Spillways and outlet works **must** work during emergencies to prevent loss of life and property.

Consequences Of Spillway Or Outlet Works Failure

There are two types of spillways and outlet works defects that cause dam failures and accidents:

- **Inadequate Capacity.** The primary cause of most dam failures is overtopping of embankment dams because of inadequate spillway and outlet works capacity. These failures are one reason why a majority of unsafe dams are considered unsafe not because of structural defects or deterioration, but because of inadequate spillway capacity. (The evaluation of capacity is outside the scope of this module.)

- **Structural Defects And Deterioration.** According to information compiled between 1972 and 1979 and published in The Safety Of Existing Dams (see the reference list in Appendix B), most dam failures and accidents related to spillway or outlet works structural defects and deterioration fell into the following categories:

  - Erosion of embankment material. (This category does not include erosion from overtopping or failure of slope protection.) Of all incidents, 88 percent involved spillways.

  - Deformation. (Deformation results from settlement, faults, or other causes.) Of all incidents, 60 percent involved spillways and outlet works.

  - Deterioration. (Corrosion and cracking are the most common types of deterioration.) Of all incidents, 55 percent involved outlet works.

  These three categories accounted for approximately 30 percent of all dam failures and accidents, and in each category, spillways or outlet works defects caused the majority of the incidents.

  In addition, spillways and outlet works often are involved in failures and accidents attributed to:

  - Overtopping. Most overtopping incidents result from inadequate spillway capacity, as mentioned previously. But in some cases overtopping and subsequent failure of dams have been caused by blocked or inoperative spillways and outlet works.

  - Embankment seepage and piping. (Piping is progressive erosion that begins where seepage exits and proceeds upstream to create a continuous cavity or "pipe" through the embankment.) Piping often begins along the outside of outlet works pipes.

I. INTRODUCTION TO SPILLWAYS AND OUTLET WORKS: FUNDAMENTALS

Importance Of Spillway And Outlet Works Inspection

Most spillway and outlet works structural defects and deterioration develop progressively. Before such conditions become serious, a trained, experienced inspector can find evidence of defects and potential problems. Periodic inspection may reveal trends that indicate more serious problems are developing.

Some problems arise suddenly. Full-capacity use during storms, flooding, or high-velocity releases can cause serious damage. For that reason, special inspections should be conducted after such events, or after seismic activity or other circumstances that may have affected the spillway and outlet works structures.

I. INTRODUCTION TO SPILLWAYS AND OUTLET WORKS: COMPONENTS

INTRODUCTION

Spillways and outlet works can each be described as a series of components, with each component serving a role as the flow of water moves downstream.

SPILLWAY COMPONENTS

Component Configuration

Five components may be present in a spillway. The following chart lists the components and describes their functions.

Component	Function
Entrance Channel	Conveys water from the reservoir to the control section.
Control Section	Regulates volume of releases.
Water Conveyance	Conveys flows from the control section over, through, or around the dam: may be a channel, conduit, or tunnel.
Energy Dissipation Section	Reduces the energy and velocity of the flowing water.
Return Channel	Conveys discharges to the natural stream channel downstream from the dam.

Figure I-4 shows an open channel spillway with all major components labeled.

Continued . . .

I. INTRODUCTION TO SPILLWAYS AND OUTLET WORKS: COMPONENTS

Component Configuration (Continued)

FIGURE I-4. COMPONENTS: OPEN CHANNEL SPILLWAY

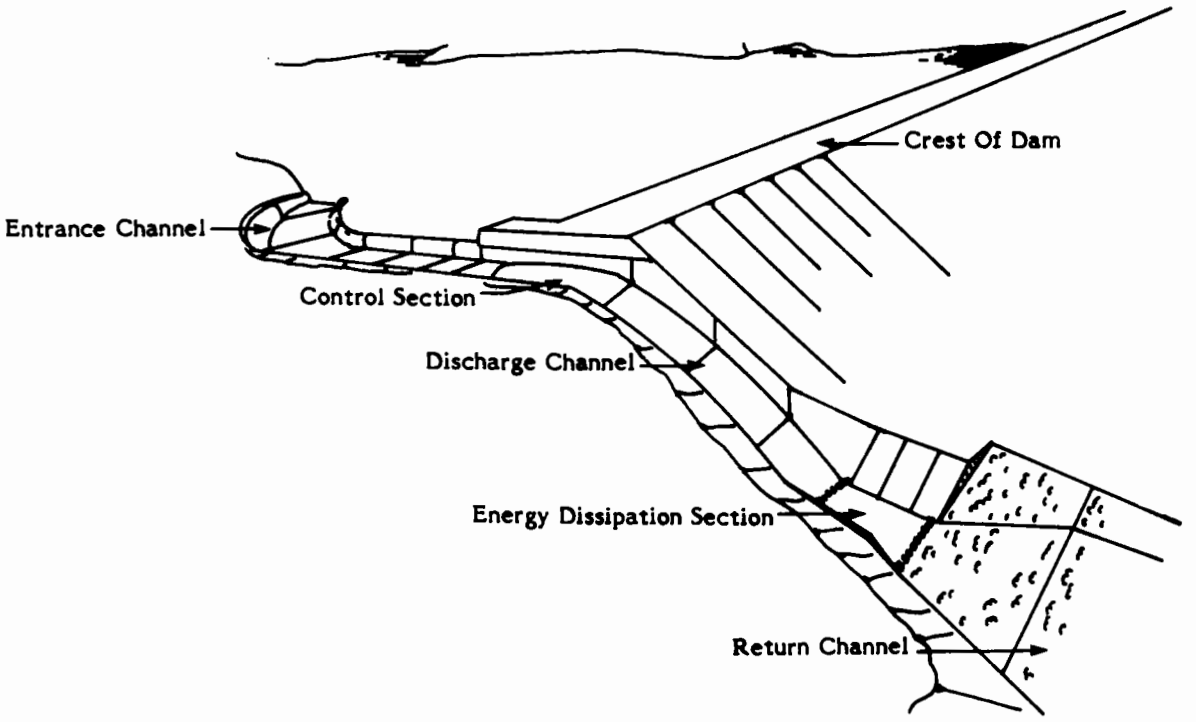

The control section is the only component common to all spillways. Many spillways do not have an entrance channel or return channel. Also, not all spillways have an energy dissipation section. A few spillways drop water directly from the control section to energy dissipators, a return channel, or a natural streambed.

Entrance channels, discharge channels, and return channels all are open channels located at different points in a spillway. The entire spillway may be an open channel, as in Figure I-4.

Closed spillways have a conduit or tunnel to convey water from the control section, as shown in Figure I-5. (The control section in Figure I-5 consists of an **intake stucture:** many closed spillways and all outlet works have intake structures.)

Continued . . .

Component Configuration (Continued)

FIGURE I-5. COMPONENTS: CLOSED SPILLWAY

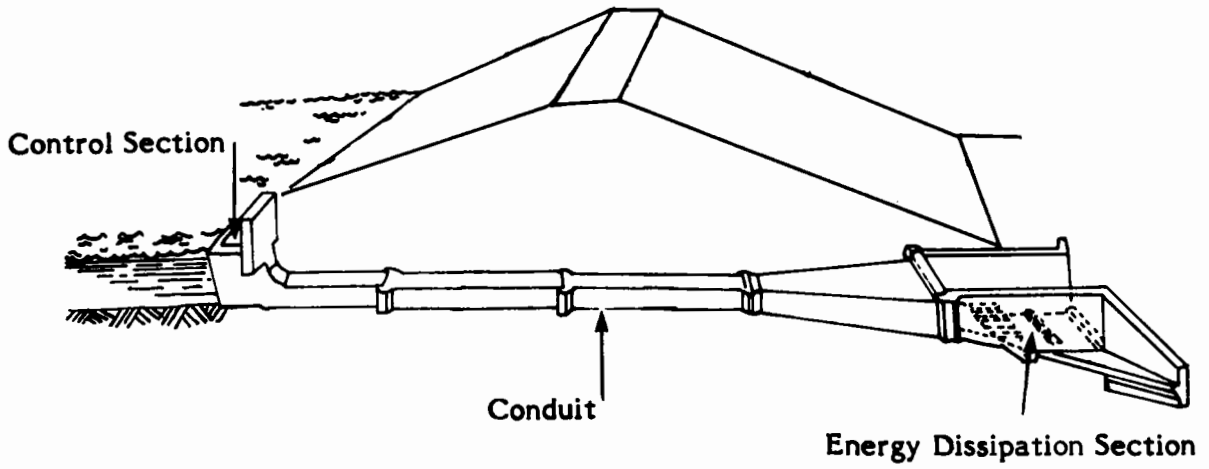

Spillways may be unlined (surfaced with vegetation, or excavated in earth or rock), or the components may be lined with concrete, riprap, or various other materials.

Merged-Component Spillway Designs

Some spillways cannot be described just in terms of the five spillway components. Instead, typical forms or designs are used to describe these types of spillways. Various features such as trash booms, trashracks, and gates may be added to these spillway designs to supplement their operation.

Tube Spillways

Culverts and siphon spillways are pipes or tubes running under or through the dam.

Drop Spillways

Drop spillways allow water to fall freely into an energy dissipation section, return channel, or streambed. The drop spillway structure incorporates an overflow crest, and usually a wall to carry discharge, as well as a floor or apron, often with energy dissipating devices.

Drop spillways are constructed in a variety of shapes. Figure I-6 shows several kinds of drop spillways.

Continued . . .

I. INTRODUCTION TO SPILLWAYS AND OUTLET WORKS: COMPONENTS

Drop Spillways (Continued)

FIGURE I-6. DROP SPILLWAYS

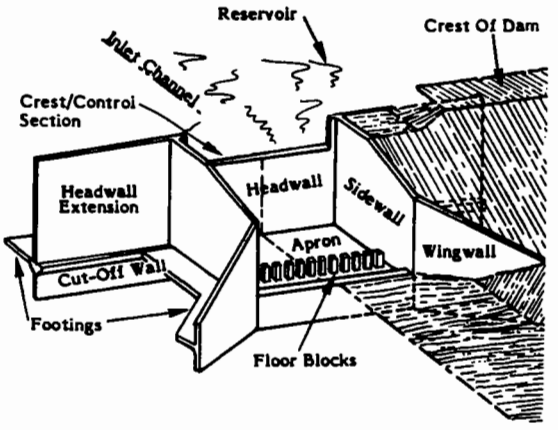

Straight Drop Spillway

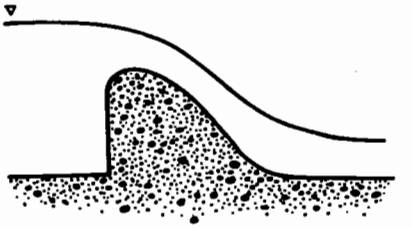

Ogee Spillway

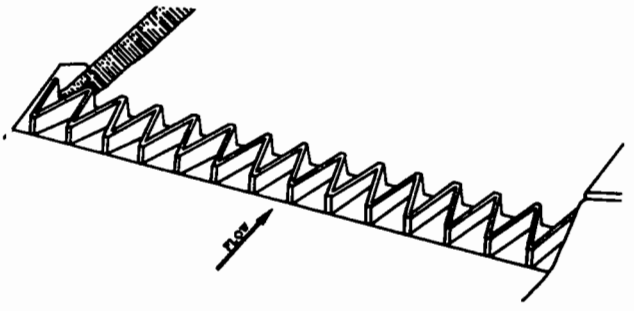

Labyrinth Spillway

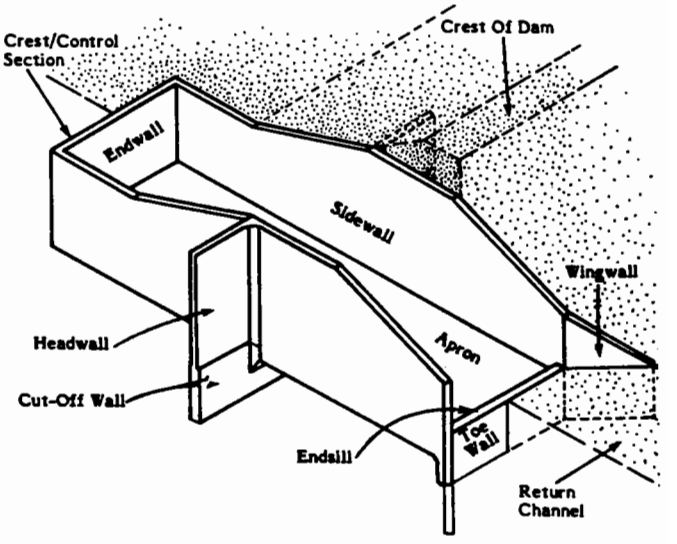

Box Inlet Spillway

I. INTRODUCTION TO SPILLWAYS AND OUTLET WORKS: COMPONENTS

OUTLET WORKS COMPONENTS

The following chart shows the six components that may be present in an outlet works, and the functions of those components.

Component	Function
Entrance Channel	Conveys water from the reservoir to the intake structure.
Intake Structure	Serves as an entrance to an outlet works.
Gate Or Valve Housing	Supports or encases a gate or valve which regulates outlet works releases.
Conduit	Conveys water through or around a dam.
Energy Dissipation Section	Reduces the energy and velocity of the flowing water.
Return Channel	Conveys discharges to the natural stream channel downstream from the dam.

The sequences of the gate or valve housings and conduit is not clear-cut. Typically, some conduit may be located **upstream** of a gate or valve housing, with additional conduit **downstream** of the control component as well.

Figure I-7 shows an outlet works with an intake structure, two gate or valve housings, conduit, and an energy dissipator.

FIGURE I-7. COMPONENTS: OUTLET WORKS

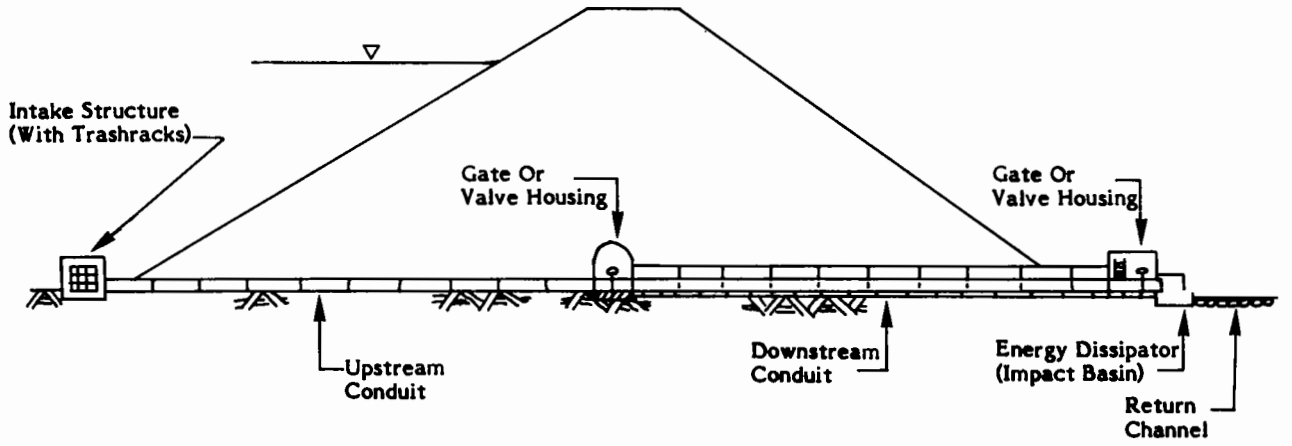

I. INTRODUCTION TO SPILLWAYS AND OUTLET WORKS: UNIT EXERCISE

INSTRUCTIONS: Use the information presented in this unit to answer the following questions. When you have completed all of the questions, check your answers against those presented in the answer key. The answer key can be found immediately following this exercise.

1. The drawing below shows a spillway. In the spaces provided, fill in the proper spillway components.

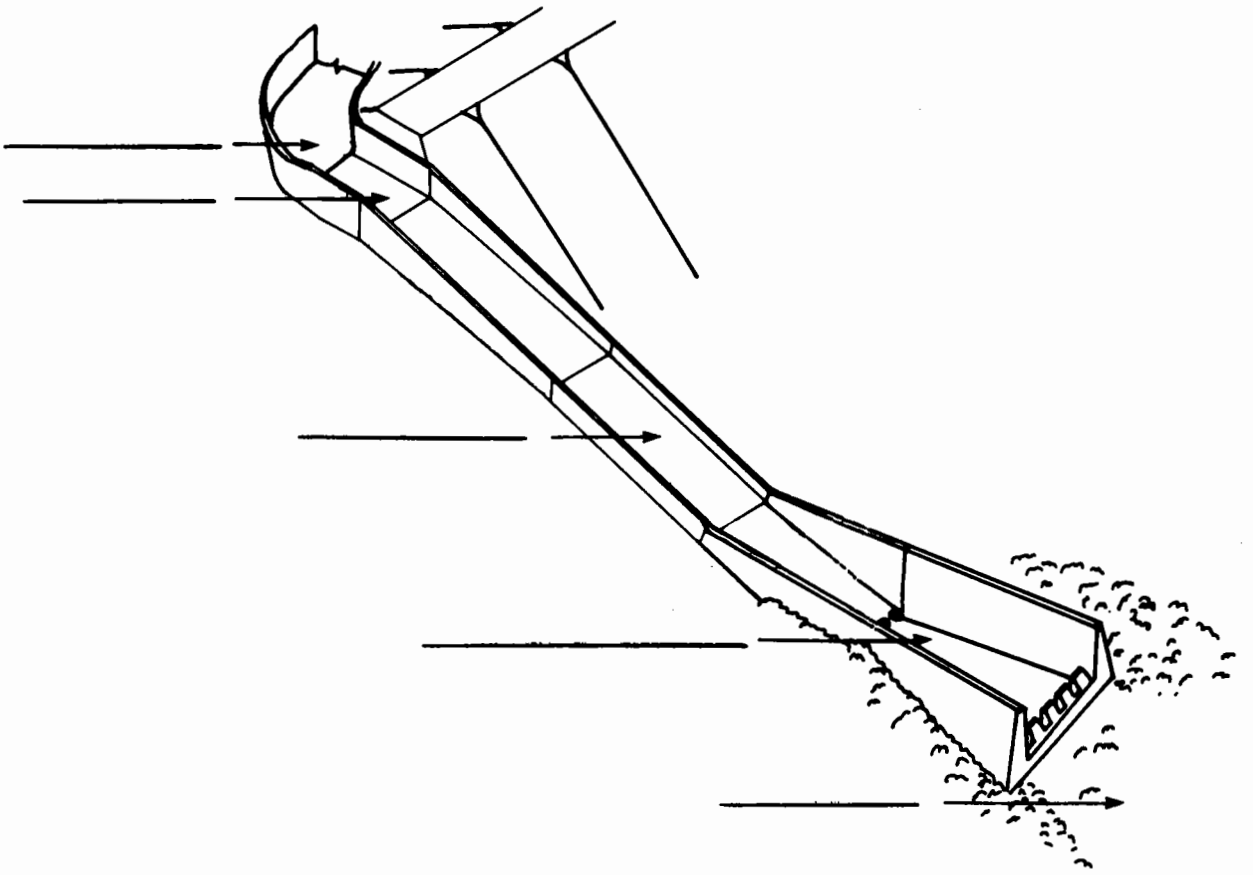

Continued . . .

I. INTRODUCTION TO SPILLWAYS AND OUTLET WORKS: UNIT EXERCISE

2. The drawing below shows an outlet works. In the spaces provided, fill in the proper outlet works components.

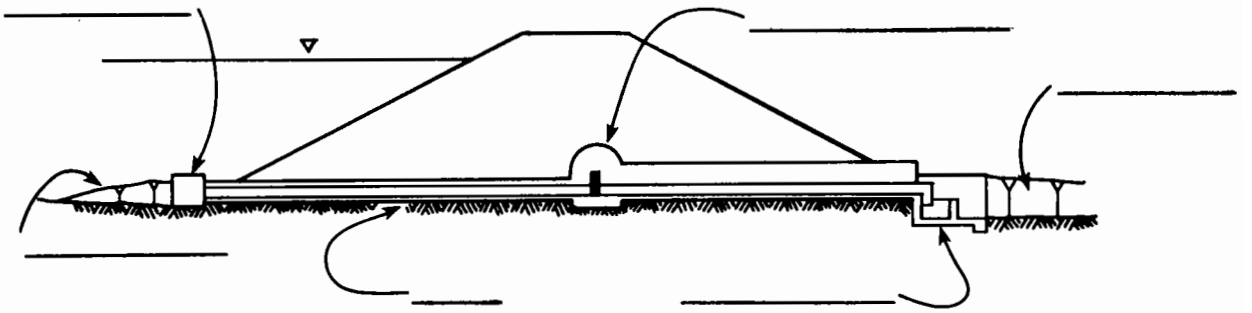

3. In the blank spaces next to each component, write the function that component performs in a spillway or outlet works.

COMPONENT	FUNCTION
Entrance Channel	_____
Intake Structure	_____
Control Section	_____
Conduit	_____
Energy Dissipator	_____
Return Channel	_____

4. In the space below, list at least two causes for dam failures and accidents which often involve spillways and/or outlet works.

- _____
- _____

I. INTRODUCTION TO SPILLWAYS AND OUTLET WORKS: EXERCISE — ANSWER KEY

INSTRUCTIONS: Compare your answers to those given below to see how well you learned the information presented in this unit.

1. The drawing below shows a spillway. In the spaces provided, fill in the proper spillway components.

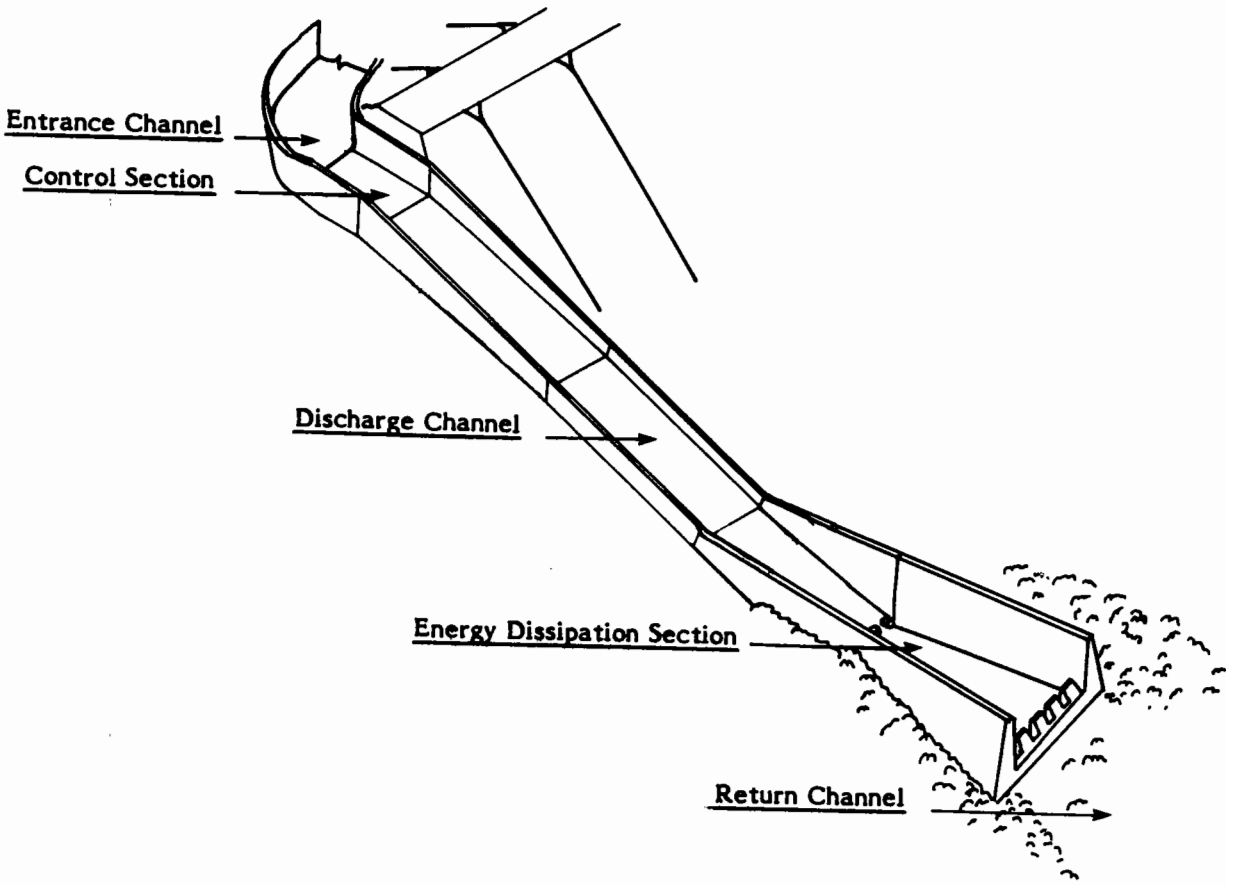

Continued . . .

I. INTRODUCTION TO SPILLWAYS AND OUTLET WORKS: EXERCISE -- ANSWER KEY

2. The drawing below shows an outlet works. In the spaces provided, fill in the proper outlet works components.

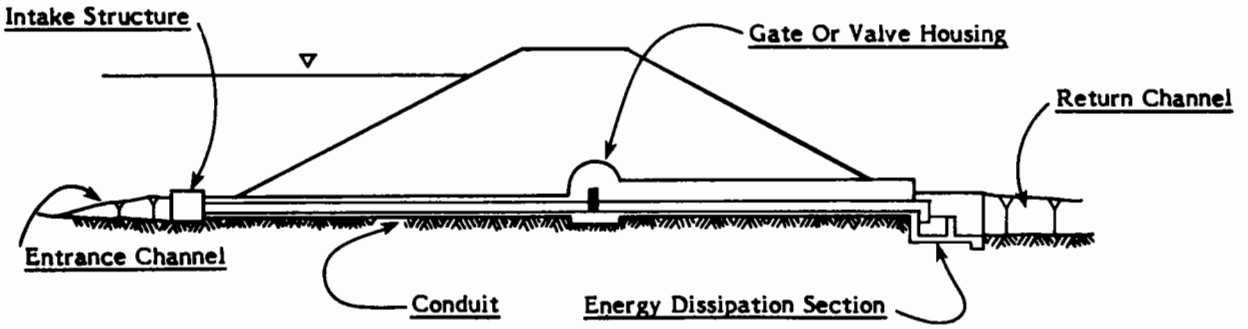

3. In the blank spaces next to each component, write the function that component performs in a spillway or outlet works.

COMPONENT	FUNCTION
Entrance Channel	**Conveys water from the reservoir to the control section or outlet works intake structure**
Intake Structure	**Entrance to an outlet works or some closed spillways**
Control Section	**Regulates volume of releases**
Conduit	**Conveys flow in an outlet works or a closed spillway**
Energy Dissipator	**Reduces and directs the energy and velocity of the flowing water**
Return Channel	**Conveys discharges to the natural stream bed**

I. INTRODUCTION TO SPILLWAYS AND OUTLET WORKS: EXERCISE — ANSWER KEY

4. In the space below, list at least two causes for dam failures and accidents which often involve spillways and/or outlet works.

   Any two of the following:

   - **Erosion**
   - **Deformation**
   - **Deterioration**
   - **Overtopping**
   - **Embankment seepage and piping**

I. INTRODUCTION TO SPILLWAYS AND OUTLET WORKS: SUMMARY

SUMMARY

This unit has described spillways and outlet works in a number of ways.

Spillways may be described in terms of:

- Frequency of use
- Forms or designs

Outlet works may be described in terms of:

- Purpose
- Structural configuration of waterways
- Hydraulic operation

Spillways often are combined with other spillways and outlet works in various configurations.

Although their individual sets of components vary, spillways and outlet works contain some or all of the following components:

- Entrance Channel
- Intake Structure
- Control Section/Gate Or Valve Housing
- Water Conveyance (Channel, Conduit, Or Tunnel)
- Energy Dissipation Section
- Return Channel

UNIT II

GENERAL PROBLEMS AND DEFICIENCIES

II. GENERAL PROBLEMS AND DEFICIENCIES: OVERVIEW

INTRODUCTION

Some general problems may occur throughout a spillway or outlet works. These concerns include:

- Common material problems
- Obstructions
- Differential movement
- Misalignment
- Foundation/backfill problems
- Seepage
- Poor drainage

UNIT OBJECTIVES

After completing this unit, you will be able to:

- List different causes of obstructions.
- Visually identify major problems.
- Describe the process of cavitation damage.

II. GENERAL PROBLEMS AND DEFICIENCIES: MATERIAL PROBLEMS

MATERIALS MODULE

Refer to the module entitled Identification Of Material Deficiencies for a detailed description of problems associated with the following materials:

- Concrete
- Asphaltic (bituminous) concrete
- Soil cement, roller-compacted concrete, and shotcrete
- Rock
- Wood
- Metal
- Miscellaneous pipe materials

CONCRETE PROBLEMS COMMON IN SPILLWAYS AND OUTLET WORKS

Spillways and outlet works experience the entire range of possible concrete problems, but conditions especially worthy of note are:

- Cracking
- Surface defects
- Concrete deterioration: cavitation
- Concrete deterioration: erosion
- Leaking Joints
  - Inadequate or damaged waterstops
  - Other joint problems

Cracking

All concrete is subject to cracking, which is usually the first visible sign of concrete distress. You will see many cracks in the course of your inspections, and not all cracks are serious. However, cracking should be monitored because cracks can provide openings in the concrete that allow other types of deficiencies to develop.

Generally speaking, most cracks will fall into the "to-be-monitored" category--cracks that have been monitored in the past and should be measured and documented. A good ongoing record is necessary in order to identify a significant change or trend. New, severe, or extensive cracking and sudden changes warrant some action on your part. The following are a few inspection guidelines:

✓ For cracks that have been monitored and documented before, take measurements and document any changes. Based on the trend noted for a particular crack, you may wish to decrease the interval between measurements or install appropriate instrumentation.

Continued . . .

Cracking (Continued)

- ✓ If you observe prominent cracks or cracking over large areas, measure and document them. In these cases, too, more frequent measurements or installation of instrumentation may be advisable.

- ✓ If you observe extensive new cracking, consider initiating a crack survey to thoroughly document all cracks in the structure and their characteristics.

- ✓ If you observe a major new crack, or one whose characteristics have changed drastically from the previous inspection, **contact an experienced and qualified engineer for assessment of the situation as quickly as possible.**

- ✓ If you observe cracks indicating movement that might be detrimental to the structure or to equipment operation (e.g., misalignment of gates that impedes gate operation and water release), **contact an experienced and qualified engineer for an immediate assessment.**

- ✓ If you find that an excessive amount of water which cannot be handled by the drainage system is flowing through a crack, recommend repairs. **Check with a concrete specialist to identify appropriate repair procedures.**

☞ **INSPECTION TIP:** If you are at all unsure about the severity of cracking, bring it to the attention of an experienced and qualified engineer so the situation can be evaluated.

Surface Defects

Surface defects are concrete deficiences that are not progressive in nature; that is, they do not necessarily become more extensive with time. They may include . . .

- Shallow deficiencies in the surface of the concrete.
- Textural defects resulting from improper construction techniques.
- Localized damage to the concrete surface.

If you observe surface defects in the concrete, you should . . .

- ✓ Record their nature and location.
- ✓ Note the need for prompt repair of defects that might lead to more extensive deterioration (e.g., by allowing water to enter the concrete mass).

Among the most common types of surface defects are honeycomb, stratification, evidence of form slippage, stains, and impact drainage.

II. GENERAL PROBLEMS AND DEFICIENCIES: MATERIAL PROBLEMS

Honeycomb

Honeycomb is a void that is left in the concrete when the mortar fails to fill the spaces between the coarse aggregate particles effectively. Honeycomb is caused by poor construction practices, such as inadequate concrete mixing, segregation due to improper placement practices, or inadequate vibration after placement in the forms.

Stratification

Stratification is the separation of overly wet or overvibrated concrete into horizontal layers, with increasingly smaller material concentrated toward the top. Stratification can result in concrete of nonuniform strength, weak areas, and disbonding of lift lines.

Form Slippage

Form slippage occurs when construction forms lack sufficient strength to withstand the pressure resulting from placement and vibration of the concrete. When the forms slip during construction, they can produce slightly offset blocks and uneven joints and surfaces. Sometimes form slippage is mistaken for misalignment of the concrete, which usually occurs well after construction.

Stains

Although discoloration and staining sometimes are associated with deterioration of concrete, most stains on concrete surfaces cause only an unpleasant appearance rather than damage. Stains may have natural causes, such as deposits from runoff water or deposits from corrosion of exterior steel. They may also result from construction or maintenance accidents (e.g., oil, grease, paint, creosote, or asphalt).

Impact Damage

Damage to a concrete surface sometimes results from mechanical impact. For example, the impact of a truck, boat, or crane, or rock thrown into chutes can mar or chip away a portion of the concrete surface. While such damage is localized, it can lead to other damage, such as freeze-thaw action, by permitting moisture to enter the concrete.

Concrete Deterioration: Cavitation

Concrete deterioration is any adverse change on the surface or in the body of the concrete that is caused by separation of components in the concrete.

In spillways and outlet works, cavitation and erosion often are causes of deterioration, and therefore will be discussed in detail. For further information about other causes of concrete deterioration, refer to the TADS module Inspection Of Concrete And Masonry Dams.

Continued . . .

Concrete Deterioration: Cavitation (Continued)

Cavitation occurs when a critical combination of the flow velocity, the flow pressure, and the vapor pressure in the water is reached. An offset or irregularity on a flow surface exposed to high velocities produces turbulence. This turbulence creates negative pressures that cause water to vaporize and form bubbles, or cavities, in the water. Bubbles collapse when subjected to higher pressures downstream from the formation site.

Bubble collapse dynamics then create shock waves that can damage the flow surface. Popping and crackling noises (crepitation) accompany the collapse of the cavities. The impact of the shock waves can produce pressures up to 100,000 pounds per square inch. Repetition of these high-energy blows eventually forms the pits or holes known as cavitation damage.

Common sites for cavitation are:

- Downstream of gates and valves
- In steep spillway chutes, tunnels, or conduits

Cavitation may occur on the floor of a chute or tunnel, or on the walls or sides of a structure.

Cavitation damage resembles erosion damage, but cavitation is potentially a much more serious problem. Once the process begins, deterioration can occur quickly. A tiny offset or carbonate deposit may induce cavitation, leading to serious damage or failure of the concrete in a spillway or outlet works during heavy flows.

A pitted surface and/or rough, ragged holes with aggregate plucked out suggest cavitation damage. Damage begins upstream and progresses downstream in a "leapfrog" pattern: each cavitation site triggers the deterioration of a new site downstream.

If cavitation is detected, try to determine what event caused the damage, and to evaluate the potential for further damage. Consider the frequency of operation. Examine air vents to flow passages visually or by pouring water into them to ensure that they are not obstructed.

Cavitation effects can sometimes be mitigated by repairing the area with stronger material such as steel polymer concrete. Installing aeration slots in tunnels eliminates negative pressures by providing additional air to the affected areas.

II. GENERAL PROBLEMS AND DEFICIENCIES: MATERIAL PROBLEMS

Concrete Deterioration: Erosion

Erosion in concrete usually begins with wearing away of the matrix material around the aggregate, and appears as relatively uniform damage over a large surface. In a spillway, erosion is usually due to the movement of abrasive materials being carried by the flowing water. Spillway aprons and stilling basins (also known as hydraulic jump basins or simply jump basins) are especially susceptible. Erosion often occurs after initial cavitation damage, and serves to increase and extend the damage.

Points of abrupt change in the flow channel or corners subjected to abrasive action are likely to show pronounced effects. Examples are:

- Bends leading from drop inlets to tunnels, conduits, and chutes
- Energy dissipators in stilling basins

Ballmilling is a specific form of concrete erosion. Repeated rotation of debris (usually rocks) by discharging water grinds the surface, usually in a circular pattern. Stilling/hydraulic jump basins are prone to ballmilling damage.

If the flows continue for long time periods and if abrasive material is carried at relatively high velocities, extensive erosion damage to concrete structures results. Erosion in a stilling/hydraulic jump basin floor can excavate enough material to make the structure unstable.

Leaking Joints

Joints may leak because of damage to waterstops or other joint problems.

Inadequate Or Damaged Waterstops

Concrete channels and conduits often include waterstops, which are continuous strips of waterproof material, usually metal, PVC, or rubber. During concrete placement, waterstops are embedded in joints between sections to prevent moisture from penetrating the joints by providing a restricted route for seepage water.

If damaged waterstops no longer provide a continuous seal, excessive seepage through the joint could erode foundation material or promote freeze/thaw damage to the joints.

Figure II-1 (on the next page) shows a typical waterstop.

Continued . . .

Inadequate Or Damaged Waterstops (Continued)

FIGURE II-1. WATERSTOP

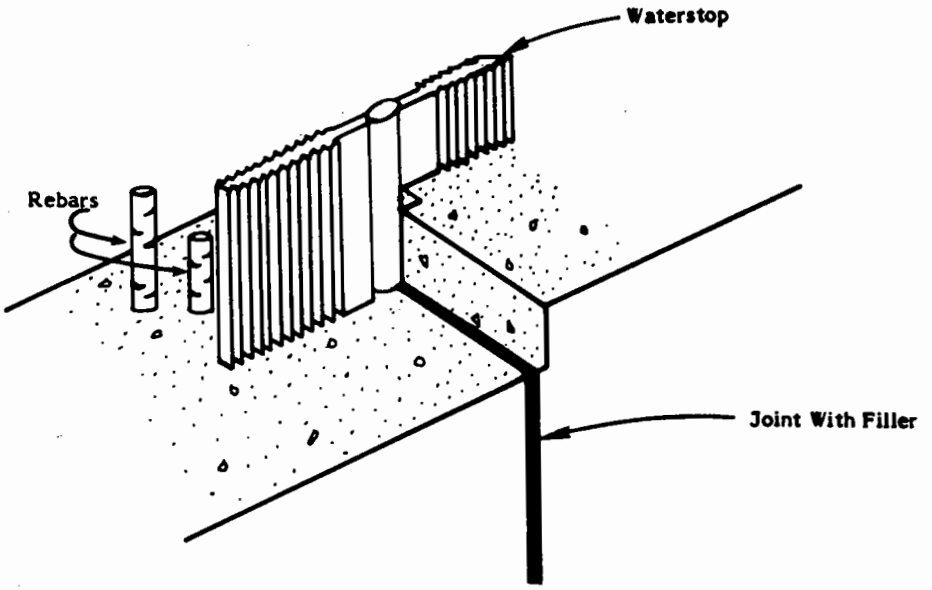

Other Joint Problems

Joints should be inspected while dry if possible. Conduits also can be inspected just after dewatering, since water shoots back through the leaking joints, and the worst leaks can be identified. (Some leakage after dewatering is normal.) Sometimes construction joint drawings and joint survey information exist, and provide useful references when joint problems are suspected. The following points apply to inspection of joints:

- Soil fines oozing through a joint are evidence of seepage.
- Joints in concrete sections are often sealed with joint sealant, or plastic or rubber compression seals. When the sealant or seal is missing or hardened, the joint is exposed to damage. Vegetation in joints indicates damaged or missing joint sealant.

INSPECTION TIP: If the joint is located in a conduit running through the dam, missing or defective joint sealant is cause for concern.

Figure II-2 (on the next page) illustrates separated, unsealed joints in a spillway channel.

Continued . . .

Other Joint Problems (Continued)

FIGURE II-2. OPEN JOINTS IN SPILLWAY CHANNEL

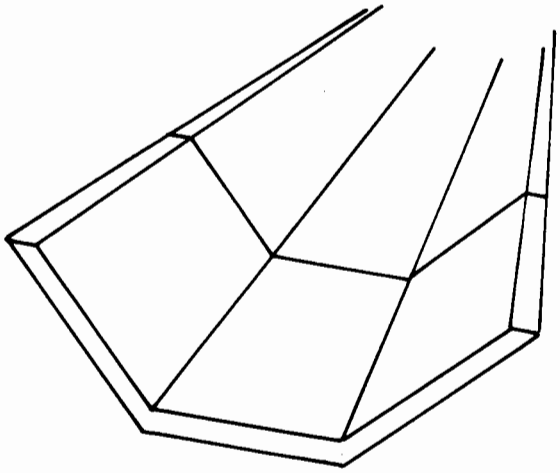

Closed Joints

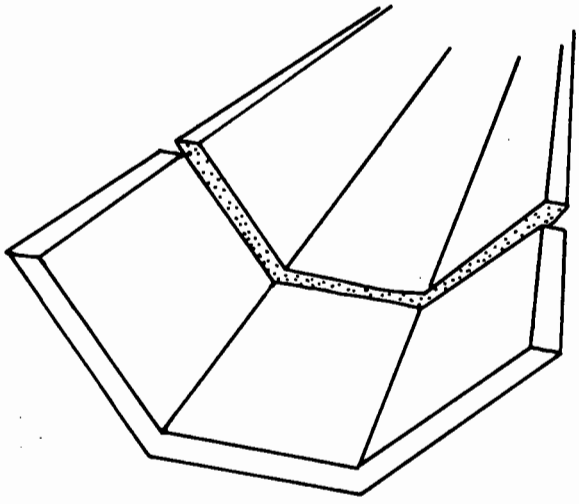

Open Joints

II. GENERAL PROBLEMS AND DEFICIENCIES: MATERIAL PROBLEMS

METAL PROBLEMS COMMON IN SPILLWAYS AND OUTLET WORKS

Corrosion (Rust, Galvanic Action)

Corrosion is progressive deterioration resulting from exposure to moisture, acid and other corrosive agents, or electrolysis, and usually is marked by scaling or flaking, pitting, and color changes. Loss of paint or other protective coatings can leave a metal surface subject to corrosion, especially if the surface is cycled between wet and dry. Unchecked corrosion eventually leads to failure of a metal structure.

An anode consists of a metal that will corrode when in the same electrode as a metal needing cathodic protection. Zinc and magnesium often are used as sacrificial anodes. Be sure to locate and examine all accessible anodes installed for cathodic protection of metal portions of a spillway or outlet works. An anode may need replacement if it is excessively corroded.

Fatigue

Fatigue is loss of metal strength from repetitive loading, such as being bent back and forth. Protrusions on metal components or components with moving parts are most likely to suffer fatigue. Distortions or cracked paint may indicate sites where a metal structure suffers from fatigue. The process continues until the affected area cracks and/or breaks.

Erosion

Flow surfaces and areas around rivets and splice plates may be scoured by abrasive debris.

Tearing And Rupture

Tearing and rupture may result from impact, such as a log slamming into a steel lining. On spillways, metal components are most likely to tear and rupture during storms or other occasions when flows are heavy. Tears and ruptures can cause a metal structure to fail completely, or expose the structure to corrosion, cavitation, fatigue, or other damage.

Cavitation

Cavitation of metal surfaces, such as metal conduits, can occur when high flow velocities exist on a flow surface with offsets and irregularities. The bubble collapse dynamics of cavitation cause pitting of the surface, which results in progressive deterioration to the point of failure. As in concrete, the site of initial cavitation damage triggers the formation of another site downstream, so the process develops in a leapfrog pattern. Areas just downstream of gates and valves are susceptible.

II. GENERAL PROBLEMS AND DEFICIENCIES: MATERIAL PROBLEMS

Cracking

Cracking is usually induced by vibrations.

Deformation

Stress may deform metal shapes. ("Egg-shaped" pipe is an example.)

II. GENERAL PROBLEMS AND DEFICIENCIES: OBSTRUCTIONS

DEFINING SPILLWAY AND OUTLET WORKS OBSTRUCTIONS

An obstruction is an unauthorized or unplanned addition to a spillway or outlet works that reduces flow capacity.

SIGNIFICANCE OF OBSTRUCTIONS

An obstructed spillway or outlet works cannot perform its function properly. During a flood, if reduced flow capacity prevents the spillway from diverting enough water from the reservoir or the outlet works from lowering the reservoir, the dam may be overtopped, and put in danger of failure.

CAUSES OF OBSTRUCTIONS

- **Overgrown Vegetation.** Grass is the ideal cover for an earth-lined spillway. Shrubs, tall weeds, and trees reduce flow capacity.

- **Aquatic Vegetation.** Submerged aquatic plants such as water hyacinths can obstruct a submerged entrance channel to an outlet works. Algae is a problem at outlets.

- **Adjacent Slope Failure.** Causes for slope failure include overly steep channel and bank slopes, drawdown of a reservoir in saturated bank material, and flow undercutting banks/slopes due to:

  - Unprotected soil
  - High flow velocities
  - Loose or deteriorated bottom and slope material
  - Failed protective surface

- **Debris.** Dead trees, slide material, and other debris can form obstructions. Sediment accumulation, vandalism, and beaver activity are also sources of debris. The entrance channel, trashracks, and gates of an outlet works are liable to be obstructed by debris.

- **Snow/Ice Dams.** In areas that experience heavy snowfalls, snow collects in spillway channels and depressions. When spring snowmelt makes spillway use necessary, snow dams may block the spillways. In areas that typically receive heavy snowfall, look for measures to clear spillways of snow in the operational plans.

Continued . . .

CAUSES OF OBSTRUCTIONS (Continued)

- **Beaver Dams.** Beaver dams can obstruct channels, submerged structures, riser pipes, and box inlets.

- **Manmade Structures.** Fences or boat docks sometimes are built on earth-lined spillways. Also, unauthorized flashboards sometimes are added to the spillway control section. Watch for earth or concrete dikes or sills added to the crest to raise reservoir storage capacity.

Figure II-3 shows examples of spillway obstructions.

Continued . . .

CAUSES OF OBSTRUCTIONS (Continued)

FIGURE II-3. SPILLWAY OBSTRUCTIONS

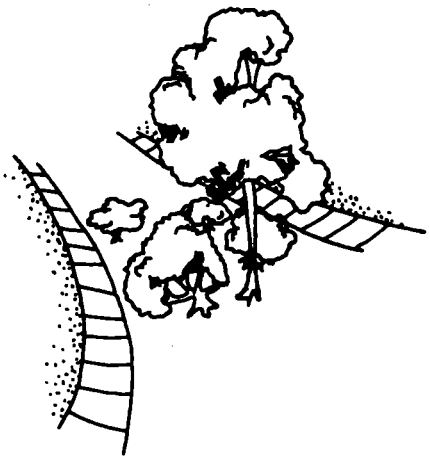

Vegetation Blocking Spillway Channel

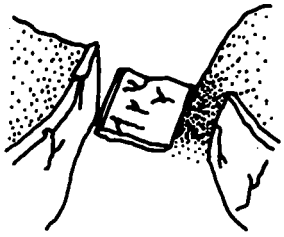

Collapsed Wall Blocking Channel

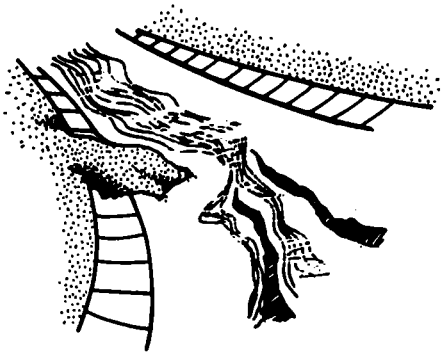

Slide Constricting Flow

Debris

SMALL-SCALE MISALIGNMENT

Defining Small-Scale Misalignment

One type of small-scale misalignment, called differential movement, is localized movement of one section of a lining, wall, ogee monolith, or other spillway component relative to adjacent sections. Causes of differential movement include:

- Loss of foundation or backfill
- Expansive clay shale foundation
- Poor drainage resulting in pressure behind the structure

Small-scale misalignment may also result from misplacement during construction. Figure II-4 shows an offset between sections of a chute. Pressures (possibly from poor drainage) have moved the sidewalls inward in the upper section of the chute.

FIGURE II-4. OFFSET RESULTING FROM DIFFERENTIAL MOVEMENT

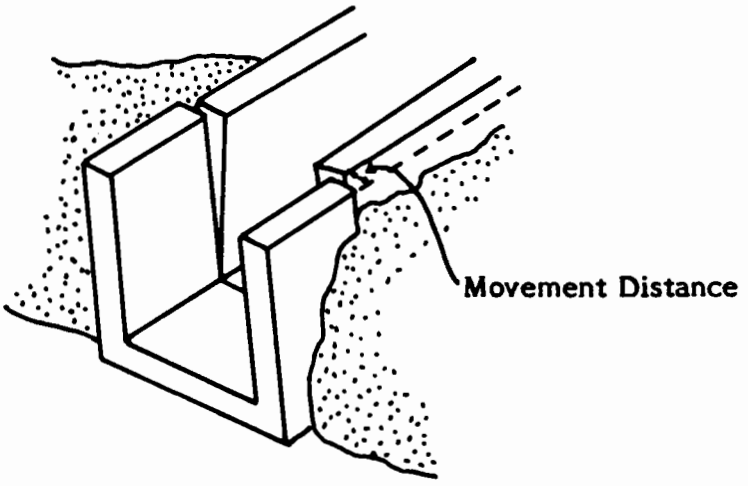

Significance Of Small-Scale Misalignment

Small-scale misalignment is a significant problem because . . .

- Offsets on flow surfaces can cause erosion and, in some cases, cavitation. Both can eventually cause the structure to fail.
- Gaps between joints allow water to penetrate and undermine foundation material, creating excessive uplift pressure, and/or allowing earth or rock material to escape.
- Compression across joint surfaces can result in concrete spalling, metal deformation, or ruptured waterstops.

LARGE-SCALE MISALIGNMENT

Defining Large-Scale Misalignment

Large-scale misalignment is the dislocation of entire structures from their design locations.

Causes Of Large-Scale Misalignment

One example of large-scale misalignment is a conduit that sags below its design horizontal centerline. Deformations or failures responsible for large-scale misalignment include:

- Overcompacted backfill, excessive earth pressure, or hydrostatic pressure pushing the structure out of position
- Loss of backfill or foundation materials
- Base spreading
- Shear failure in foundation
- Settlement of foundation
- Seismic activity causing foundation collapse

Large-scale misalignment may cause a structure to fail. Landmarks, boundaries, and sighting techniques can be used to check for this problem.

II. GENERAL PROBLEMS AND DEFICIENCIES: FOUNDATION/BACKFILL PROBLEMS

DEFINING FOUNDATION AND BACKFILL PROBLEMS

Foundation and backfill problems are related to many other problem conditions in spillways, both as the cause and as the result of those conditions. For example, misalignment is often the result of foundation, backfill, and drainage problems. (Gaps in spillway channel joints caused by differential movement, for example, expose the foundation to erosion.)

FACTORS IN FOUNDATION AND BACKFILL PROBLEMS

- **Seepage.** Seepage can move materials by piping, undermining the foundation or backfill. A saturated soil base can shift or collapse.
- **Erosion.** The foundation or backfill adjacent to spillway channels or in the terminal area often suffers erosion damage.
- **Settlement.** Settling can cause misalignment.
- **Foundation faults.** Foundation faults can cause misalignment.
- **Expansive foundation.** Structures built on an expansive clay or clay shale foundation are subject to heaving and misalignment across joints.

II. GENERAL PROBLEMS AND DEFICIENCIES: SEEPAGE

DEFINING SEEPAGE

Seepage in earth dams is the slow percolation of water through the embankment and its foundation.

SIGNIFICANCE OF SEEPAGE

Both the velocity and quantity of seepage must be controlled or piping will occur. Piping is a term that describes internal erosion that begins at the downstream side of the embankment and continues at a progressive rate toward the reservoir until an internal pipe or direct conduit to the reservoir has been formed. Rapid failure of the dam results. Figure II-5 shows one way a piping failure can occur from seepage through an outlet works. An explanation of the sequence of events appears on the next page.

FIGURE II-5. EXAMPLE OF A PIPING FAILURE

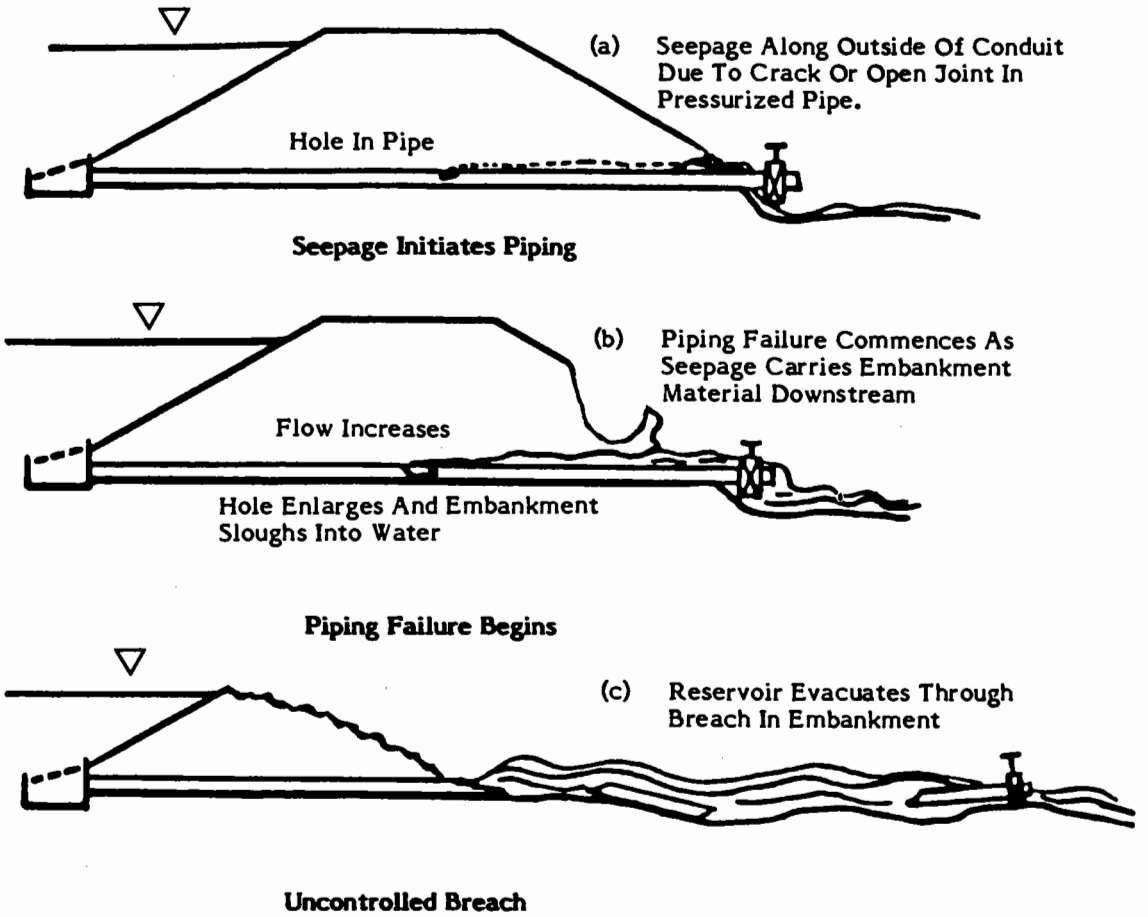

Continued . . .

SIGNIFICANCE OF SEEPAGE (Continued)

A hole in the conduit allowed water to seep outside the conduit and move along the pipe to the toe of the dam. As the seep water emerged from the embankment, it carried some of the embankment material with it. As the hole enlarged, seepage increased. The embankment was progressively eroded back toward the hole, forming a "pipe" through the embankment material. The piping failure was completed when sloughing of the embankment caused the dam to be breached.

II. GENERAL PROBLEMS AND DEFICIENCIES: POOR DRAINAGE

WEEPHOLES AND DRAINS

Spillways commonly have weepholes or other means of drainage to prevent excess water pressure from developing behind a structure. When no weepholes or drainage systems exist, or when drains are plugged, excess water will accumulate. This is a problem for the following reasons:

- A saturated foundation has lower bearing capacity.
- Uplift pressure from seepage water may cause damage to a spillway chute.
- Structures are designed for certain waterloads. If these hydrostatic pressures are exceeded because of defective drainage, then instability or distress can result.

Figure II-6 shows a cross-section view of a typical weephole.

FIGURE II-6. WEEPHOLE

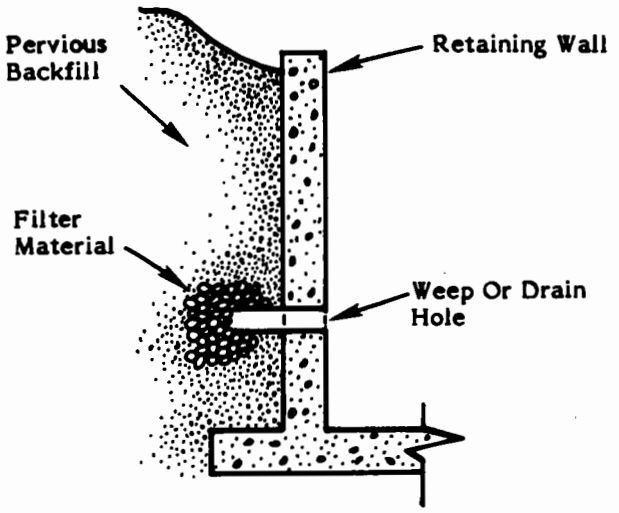

Weepholes can become plugged by debris, infiltration of fines, iron incrustation, and carbonate deposits. An inspection might include probing weepholes to check for obstructions and recording depth measurements on the crack maps.

Signs of poor drainage include:

- Ponding of water behind walls
- Dampness on concrete surface, especially at cracks and joints
- Moisture seeping through cracks or joints
- Tilted walls or heaved slabs

Continued . . .

WEEPHOLES AND DRAINS (Continued)

Figure II-7 illustrates the symptoms of poor drainage.

FIGURE II-7. SIGNS OF POOR DRAINAGE

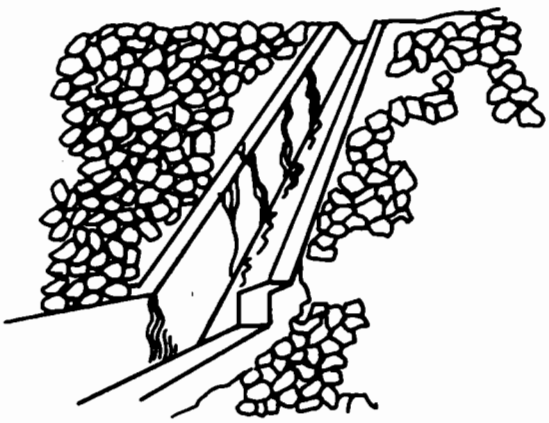

Backfill Saturation

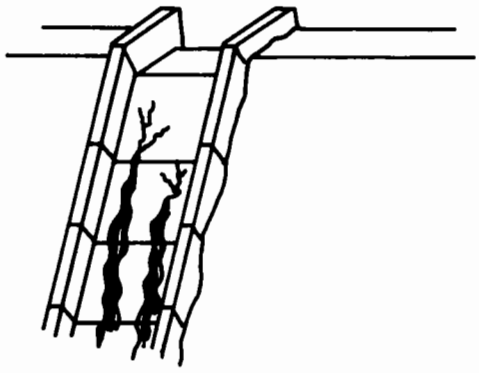

Crack Seepage

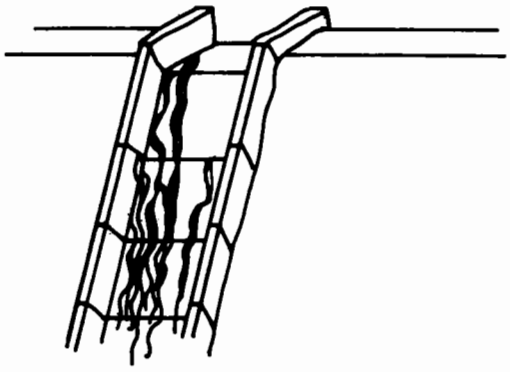

Joint Seepage

II. GENERAL PROBLEMS AND DEFICIENCIES: UNIT EXERCISE

INSTRUCTIONS: Use the information presented in this unit to answer the following questions. When you have completed all of the questions, check your answers against those presented in the answer key. The answer key can be found immediately following this exercise.

1. The steps or conditions describing the development of cavitation damage in concrete are listed below. Put the steps in order by writing the step number next to each item.

   _____ Pits or holes are formed.

   _____ Turbulence is created.

   _____ High-energy shock waves strike the concrete surface.

   _____ Cavities, or bubbles, form.

   _____ An offset or irregularity is exposed to high velocity flows.

   _____ Bubbles collapse.

   _____ Negative pressures cause the water to vaporize.

2. In the space below, list at least three types of spillway and/or outlet works obstructions.

   - _____
   - _____
   - _____

Continued . . .

II. GENERAL PROBLEMS AND DEFICIENCIES: UNIT EXERCISE

3. Write the name of the problem shown below each drawing.

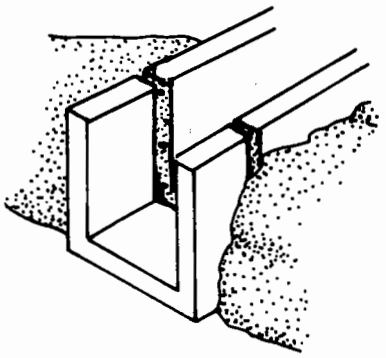

_____

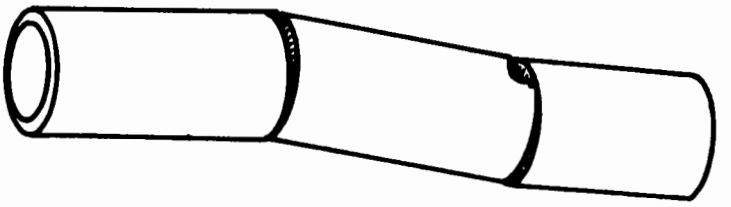

_____

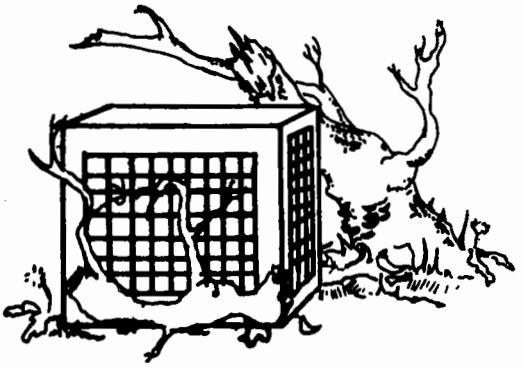

_____

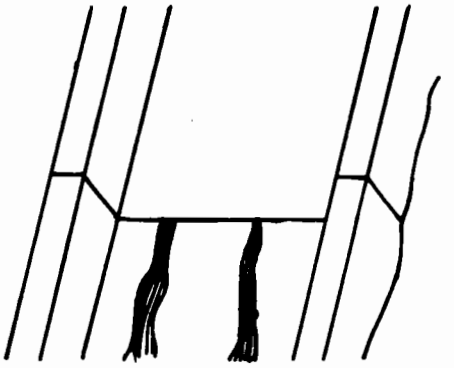

_____

II. GENERAL PROBLEMS AND DEFICIENCIES: UNIT EXERCISE — ANSWER KEY

INSTRUCTIONS: Compare your answers to those given below to see how well you learned the information presented in this unit.

1. The steps or conditions describing the development of cavitation damage in concrete are listed below. Put the steps in order by writing the step number next to each item.

   __7__ Pits or holes are formed.

   __2__ Turbulence is created.

   __6__ High-energy shock waves strike the concrete surface.

   __4__ Cavities, or bubbles, form.

   __1__ An offset or irregularity is exposed to high velocity flows.

   __5__ Bubbles collapse.

   __3__ Negative pressures cause the water to vaporize.

2. In the space below, list at least three types of spillway and/or outlet works obstructions.

   Any three of the following:

   - **Overgrown vegetation**
   - **Aquatic vegetation**
   - **Adjacent slope failure**
   - **Debris**
   - **Snow/ice dams**
   - **Beaver dams**
   - **Manmade structures**

Continued . . .

II. GENERAL PROBLEMS AND DEFICIENCIES: UNIT EXERCISE -- ANSWER KEY

3. Write the name of the problem shown below each drawing.

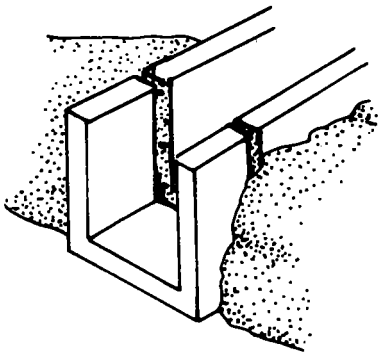

Open Joints

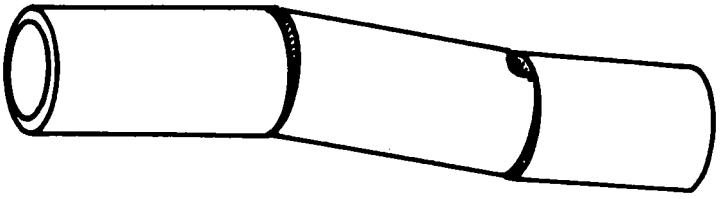

Misalignment, Open Joints

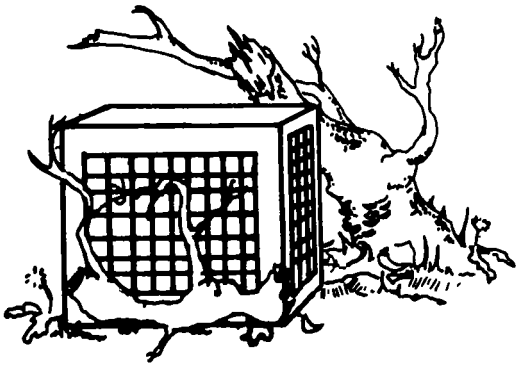

Debris

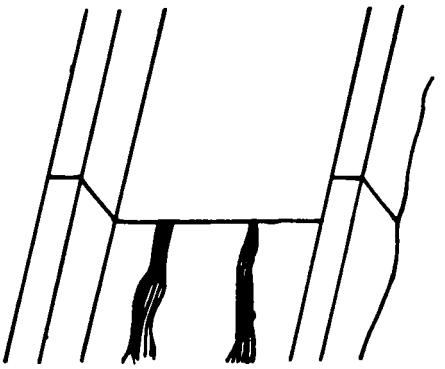

Seepage; Joint Seepage

II. GENERAL PROBLEMS AND DEFICIENCIES: SUMMARY

SUMMARY

This section provided descriptions of general problems that could appear throughout spillways or outlet works. These problems include:

- **Material problems.** Cavitation, erosion, inadequate or defective waterstops, and joint problems in concrete were described, as well as metal problems common to spillways and outlet works.

- **Obstructions.** Causes for obstructions can be overgrown vegetation, aquatic vegetation, adjacent slope failure, debris, snow/ice dams, beaver dams, and manmade structures.

- **Misalignment**

  - Small-scale misalignment is a localized offset of one section of a structure relative to adjacent sections. Small-scale misalignment can result from differential movement or from construction errors.

  - Large-scale misalignment is the movement of an entire structure from its design location.

- **Foundation and backfill problems.** Misalignment and poor drainage are interrelated with foundation and backfill problems. Causes of problems include:

  - Seepage
  - Erosion
  - Settlement
  - Foundation faults
  - Expansive foundation

- **Seepage.** Seepage, especially from an outlet works, may lead to piping failure in an embankment dam.

- **Poor drainage.** Weepholes and drains can prevent excess water pressure from developing behind a structure. Tilted walls or heaved slabs may result from excess pressure.

UNIT III

INSPECTION GUIDELINES

III. INSPECTION GUIDELINES: OVERVIEW

INTRODUCTION

This unit describes how you should prepare for and conduct spillway and outlet works inspections. Points covered include:

- Scheduling inspections
- Document review
- Equipment needed
- Techniques

You may want to refer to the following modules for general information on inspection preparation and reporting:

- Preparing To Conduct A Dam Safety Inspection
- Documenting And Reporting Findings From A Dam Safety Inspection

This unit will concentrate on information specific to inspections of spillways and outlet works.

UNIT OBJECTIVES

After completing this unit, you will be able to . . .

- Schedule inspections when you will have the best access to various features.
- List construction and design procedures that have become more carefully controlled than in the past.
- Describe possible problems associated with various features or conditions at the dam site.

III. INSPECTION GUIDELINES: INSPECTION PLANNING

SCHEDULING FACTORS

Several factors should be considered when deciding upon a time to conduct a spillway or outlet works inspection. These factors include:

- **Sufficient notice to dam owners and operators.** Two to three months may be needed to make necessary arrangements (such as special equipment or approval for dewatering conduits, basins, or pools). For dewatering of outlet works components to occur, a means of closure such as stoplogs or a bulkhead (plus any equipment needed for placement) may be necessary. Furthermore, the outlet works conduit must be able to withstand the external pressures that exist under dewatered conditions. The owner of the dam may be asked to formally certify the adequacy of the works for dewatered inspection.

- **Optimum access.** The inspection should be scheduled when all or most of the major components of a spillway or outlet works system can be examined. Submerged structures should be drained, if possible, before an inspection. The owner or operator may be requested to notify the inspectors when the reservoir level is scheduled to be drawn down, or when pools or other components are to be drained for maintenance or other purposes, so inspections can be performed under dry conditions.

- **Observing operation.** If you can see a spillway in operation, you may detect problems or potential problems that would not appear when the same spillway is dry. Where possible, you may want to schedule an outlet works inspection for a higher regulated reservoir level than has previously been inspected, to observe conditions under greater load.

You are unlikely to both gain optimum access and observe unusual stresses from operation during a single inspection of a structure. These two goals are often incompatible, and inspection objectives may have to alternate from one inspection to the next. Visits under different conditions can provide a comprehensive view of a structure's safety. For example, a dry conduit may display no visible joint problems, but just after dewatering, you might see water spurting from some leaky joints into the conduit.

SPECIAL INSPECTIONS

If significant problems are noted during an inspection, an experienced and qualified engineer may be required to make a special inspection.

Special inspections are also recommended after floods, earthquakes, or other unusual events that may have resulted in significant damage to structures.

III. INSPECTION GUIDELINES: DOCUMENT REVIEW

DATA SOURCES

The project records that relate to spillways and outlet works are previous report summaries, prior inspection checklists, Standing Operating Procedures (SOP) manual, design documents, and construction drawings. (Construction drawings may not be available.)

PREVIOUS PROBLEM AREAS

Previous inspection report summaries contain findings and recommendations concerning problems and deficiencies. Before making your inspection, review these documents (including photographs and sketches) to determine what problems or types of deficiencies have been noted previously for the particular spillway or outlet works.

- Do the reports show any worsening trends?
- Does a chronic condition need to be rechecked?
- Do repairs need to be checked for structural and material adequacy?
- What kind of action was taken on previous recommendations?

The module Preparing To Conduct A Dam Safety Inspection contains a checklist that you may want to refer to when reviewing documents.

CURRENT PROBLEM AREAS

Employees working at a dam may be aware of problems that have arisen since the previous inspection. Interview the owner or operating personnel before completing the inspection plan to ask about current operating changes and new problems. Ask about leaks or cracks, and seepage adjacent to spillways or outlet works.

KNOWN DEFICIENCIES OR POTENTIAL PROBLEMS

During document review, look for the following situations:

- Obsolete construction methods. Examples include:
  - Conduit interiors not coated or lined.
  - Pipe joints not adequately sealed.
  - No moisture control procedures for curing concrete.
  - Lack of controlled compaction along a conduit.
  - Copper waterstops, which weaken over time and lack flexibility.
  - Concrete mixes not designed to resist local soil and water chemistry (if the mix is described in construction records, and you have the background and knowledge to determine this situation).

Continued . . .

KNOWN DEFICIENCIES OR POTENTIAL PROBLEMS (Continued)

- Obsolete component configuration, equipment, or other features. For example:

  - Older methods of shaping inlets for gates.
  - Poor hydraulic shape of spillways and water passages, with abrupt bends causing flow separation, uplift, and cavitation.
  - Obsolete types of spillway gates, including counterweighted gates, bear trap gates, and roller gates. These types of gates allow little or no control, and can be unreliable.
  - Needle beams on spillways, which are hard to control, cannot be replaced without dropping the reservoir below the sill level, and are subject to severe weathering.

  Make note of outdated design and construction practices. Prepare to compare the design and intended operation with actual operation.

- Materials nearing end of life expectancy. Corrugated metal pipe (CMP) usually lasts 25-30 years, for example, while cast iron pipe has been known to last well over 100 years.

- Construction problems or anomalies. Note such conditions as a fault zone crossing a conduit or channel, or a soft zone in the foundation that was not removed or treated.

- Inadequate inspection during construction. Prepare to give special attention to items that, according to records, were not subject to inspection.

- Spillways excavated through erodible materials. Plan to look for slope failure, missing foundation material, and undercutting in the terminal area.

- Base spreading. Unless the dam is founded on rock, anticipate joint separation at conduit or channel joints from base spreading.

- Geologic faults or shear zones. Anticipate possible distortion or damage to channels or conduits where fault lines are crossed.

- Compressible foundation. Anticipate differential settlement, especially at and near the interface of components such as conduits or channels with gate structures, and at monolith joints. A conduit on a compressible foundation may crack, separate at joints, or have a misaligned gate or valve housing.

- Large gates. Remember to check for differential settlement (especially on compressible foundations) and/or cracking between the gate structure and the channel or conduit.

Continued . . .

III. INSPECTION GUIDELINES: DOCUMENT REVIEW

KNOWN DEFICIENCIES OR POTENTIAL PROBLEMS (Continued)

- Evidence of prior wall/slab movement. Plan to check for inadequate relief of water pressure behind walls or under slabs, and for settlement.

- Pressurized outlet works conduit passing through the dam. The pressurized section is difficult to inspect, but if possible resolve to check the integrity of the section very carefully, especially for an embankment dam. Cracks in the concrete or an inadequate weld at a steel pipe joint can allow pressurized water to be injected into the embankment.

- High-velocity flow. Prepare to look for cavitation damage at discontinuities in the flow surfaces, boundaries, or areas where negative pressure could develop.

- Bedload (rocks, gravel, sand) liable to be drawn into the outlet works intake. Expect abrasion of the concrete and metal components.

- Detrimental water quality. If records show that local water is harmful to concrete, conduit, or waterstops, anticipate deterioration.

- Results of balance/imbalance tests on gates that indicate abnormalities.

III. INSPECTION GUIDELINES: CONDUCTING INSPECTIONS

INTRODUCTION

This section will discuss tools and equipment, good inspection techniques, and inspection reporting.

TOOLS AND EQUIPMENT

You will find a general checklist of tools and equipment needed for dam safety inspections in the module Preparing To Conduct A Dam Safety Inspection. This section concentrates on items to include when inspecting spillways and outlet works.

The following items are considered useful when inspecting spillways:

- A rope and/or ladder for areas that are difficult to access
- Watertight boots
- Binoculars to check for cracks or defects in inaccessible areas
- Probe to measure crack, sinkhole, and weephole depths
- Rock hammer or chipping hammer to check concrete and rock surfaces and for finding hollow-sounding concrete
- Copies of the inspection plan and the design or as-built drawings
- Flashlight for tunnels and conduits
- Stakes and flagging tape to mark sinkholes or unstable slopes
- Boat (and related safety equipment) to provide easier access or easier inspection of some features
- Crampons for shoe traction on ice and sloped or wet concrete
- Bonker (a hardwood dowel with a metal tip) used to listen for hollow areas below surface facing
- Hard hats and gloves

These additional items are useful for inspecting outlet works:

- Air quality monitors. If air quality or ventilation is poor, a compressed air supply and breathing equipment may be needed.
- Ear protection to be worn when gates, valves, or other equipment are to be operated
- Fathometer for determining depth of water in an entrance channel
- Remotely operated vehicle (ROV) with camera
- Safety glasses for inspection around machinery or in some narrow shafts
- Skateboard or creeper for an inspector to be pulled through small conduits
- Two-way radios or other communication systems
- Ultrasonic thickness-measuring device to determine thickness of metal

III. INSPECTION GUIDELINES: CONDUCTING INSPECTIONS

GOOD INSPECTION TECHNIQUES

As each spillway or outlet works component is discussed in Unit IV, inspection techniques applying to that component will be described. Some important general procedures that apply to most inspections are discussed in this section. For a more thorough discussion of inspection techniques, refer to the TADS module Preparing To Conduct A Dam Safety Inspection.

The following guidelines may be useful when inspecting spillways and outlet works:

- Take a few minutes to preview the inspection plan with the owner/operator before beginning. Ask about current and past problems with the spillway(s) and outlet works.

- Make sure specialized equipment (such as carts, tracks, hoists, or harnesses) intended for use during the inspection is safe and in operating order.

- Underwater inspection may be required to check for excessive debris, for damage to trashracks, plunge pools, aprons, or stilling basins, and for undermining. Underwater inspection of an energy dissipator, as an alternative to dewatering, may be more practical and economical.

☞ **INSPECTION TIP:** If dewatering for inspection is not possible, underwater inspections should be considered. Use **inspection** divers who are qualified to dive safely, and who have been trained to perform adequate inspections, if possible. An experienced and qualified engineer directing dives is the best alternative to the use of qualified inspection divers.

- Remotely operated video equipment is an option when the safety of a diver inspection is in question, or the cost is prohibitive.

- Make a point to look for and document anything out of the ordinary, no matter how minor it might seem. Investigate new or unusual observations.

- Discuss problems you find with the owner/operator, and explain any maintenance-type corrections that you expect will be recommended. Personally inform the owner/operator of any problems or deficiencies that were found, especially if the deficiencies were serious or repairs are likely to be expensive. Explain that a timeframe will be set, as your organization dictates, and a followup inspection made, if appropriate. (A relatively inexperienced inspector should consult an experienced and qualified engineer or other knowledgeable person before changing the timing of the next scheduled inspection. Agency policy will usually dictate the procedure to use.)

INSPECTION REPORTING

Refer to the module Documenting And Reporting Findings From A Dam Safety Inspection for a checklist of items to include in an inspection report.

Observations and recommendations concerning spillways and outlet works may relate to operation and maintenance or may bear directly on the safety of the dam.

III. INSPECTION GUIDELINES: PERSONAL SAFETY CONCERNS

SPECIAL SAFETY CONCERNS WHEN INSPECTING SPILLWAYS AND OUTLET WORKS

General safety issues that relate to inspections are detailed in the module entitled Preparing To Conduct A Dam Safety Inspection. The following safety issues are particularly important to the inspection of outlet works.

- Only persons who are physically fit should attempt a strenuous inspection task. Some agencies have a policy that everyone on the inspection team must tell the leader of any personal physical condition that could cause trouble. Even if this is not your agency policy, the leader should still ask team members about relevant health conditions and allergies. Also, if the site is high in the mountains, visitors from other regions may have altitude-related problems even if they are physically fit.

- Some water conveyance structures (such as penstocks) are very long, and many conduits and tunnels are steep and narrow. Provide for communications between someone at the entrance and the inspector inside. An inspector going into a small diameter pipe should have a rope attached.

- Natural gas sometimes leaks into tunnels and shafts from adjacent bedrock. There may also be combustible dust. A qualified person using appropriate instruments should determine the presence and concentrations of oxygen and toxic and flammable gases if there is not adequate ventilation.

- Poisonous snakes are a real hazard during warm weather inspection in many parts of the country. Check especially the area beneath an outlet works or spillway pipe for water moccasins.

- For an underwater inspection, divers should be qualified in both diving and, if possible, diving inspection. If necessary, qualified non-engineer divers can provide a video during the inspection for inspectors or other qualified personnel on the surface. Divers should be made aware of the potential dangers near intake structures, such as possible slides, leakage-induced flows, and damage to diving equipment from sharp edges of metal.

- When working around energy dissipators or on steep or slippery slopes, an inspector should be secured by ropes or harnesses. Water conveyance surfaces often have algae growth that can be particularly treacherous.

☞ **IMPORTANT INSPECTION TIP:** If water is against the gates, make sure all control equipment has been secured from operation or clearly marked ("red-tagged") with warnings that personnel may be injured if the equipment is operated. Be sure that operations and inspection personnel understand the significance of red-tag procedures.

III. INSPECTION GUIDELINES: "SMPL"

REMEMBER TO "SMPL"

When you observe deficiencies, remember to . . .

S **Sketch** what you have observed if a photograph would not capture important aspects of the deficiency.

M **Measure** and record dimensions of the deficiency in your notes.

P **Photograph** the deficiency and describe its characteristics in your notes.

L **Locate** the deficiency in relation to some standard reference point (e.g., a feature of the dam or permanent monument) and record the location in your notes.

III. INSPECTION GUIDELINES: UNIT EXERCISE

INSTRUCTIONS: Use the information presented in this unit to answer the following questions. When you have completed all of the questions, check your answers against those presented in the answer key. The answer key can be found immediately following this exercise.

1. Name three design and construction procedures that have become more carefully controlled over the years.

   - _____
   - _____
   - _____

2. Next to each description of spillways or outlet works that may be found in previous reports or other documents, write the problem(s) that may be associated with each fact or condition.

   Large gates _____

   Foundation faults _____

   Excavated through erodible material _____

   Compressible foundation _____

3. In the space below, write some problems you might anticipate if an outlet works conduit was built on a compressible foundation.

   _____

   _____

   _____

   _____

Continued . . .

III. INSPECTION GUIDELINES: UNIT EXERCISE

4. The letters "**SMPL**" abbreviate the steps taken to describe a deficiency. Write the full word naming the step next to each letter.

S _____

M _____

P _____

L _____

III. INSPECTION GUIDELINES: UNIT EXERCISE — ANSWER KEY

INSTRUCTIONS: Compare your answers to those given below to see how well you learned the information presented in this unit.

1. Name three design and construction procedures that have become more carefully controlled over the years.

   Any three of the following:

   - **Concrete mixes designed to resist local soil and water chemistry**
   - **Conduit interiors coated and lined**
   - **Improved joint sealing procedures**
   - **Moisture control procedures for curing concrete**
   - **Compaction procedures**

2. Next to each description of spillways or outlet works that may be found in previous reports or other documents, write the problem(s) that may be associated with each fact or condition.

Large gates	**Cracking between gate housing and discharge section, movement of spillway component**
Foundation faults	**Movement of spillway components, settling**
Excavated through erodible material	**Missing foundation material, undercutting in energy dissipator area, movement of components**
Compressible foundation	**Settling, movement of components**

3. In the space below, write some problems you might anticipate if an outlet works conduit was built on a compressible foundation.

   Differential settlement that could lead to:

   - **Cracking of the conduit**
   - **Separation of joints**
   - **Misalignment of the gate or valve housing**

Continued . . .

III. INSPECTION GUIDELINES: UNIT EXERCISE — ANSWER KEY

4. The letters "SMPL" abbreviate the steps taken to describe a deficiency. Write the full word naming the step next to each letter.

   S Sketch

   M Measure

   P Photograph

   L Locate

III. INSPECTION GUIDELINES: SUMMARY

SUMMARY

This section presented general information about planning and conducting an inspection of spillways and outlet works. Points covered included:

- Factors to consider when scheduling an inspection.

  - Sufficient notice to dam owners and operators, water users, and regulatory agencies. Determine the structural and operational feasibility of dewatering the outlet works before an inspection. If dewatering is feasible, allow time for obtaining any necessary equipment or permits, and for making arrangements with water users. Arrange for hoists, harnesses, or other special equipment for inspecting spillways or outlet works.

  - Optimum access. Try to make the inspection coincide with periods when structures will be dewatered or drained for maintenance or other purposes. Choose a time when most components can be viewed.

  - Observing operation. You may need to see an outlet works under the stress of greater-than-usual load or a spillway in operation to detect some problems.

- Review of project records. Review design documents, as-built drawings, construction reports, previous inspection reports and checklists, and operation and maintenance records. Note the age of the project, geologic characteristics of the site (faults, shear zones), and the operating characteristics of the spillway and outlet works structures. Look for:

  - Current deficiencies
  - Known deficiencies or potential problems

- Useful tools and equipment

- Good inspection techniques

  - Previewing the inspection plan and discussing findings with the owner/operator
  - Checking specialized equipment
  - Conducting underwater inspections

- Personal safety concerns

- Remember to "SMPL"

UNIT IV

INSPECTING THE COMPONENTS

IV. INSPECTING THE COMPONENTS: OVERVIEW

INTRODUCTION

This unit gives you information about points to inspect when looking at spillway and outlet works components, including:

- Entrance Channel
- Intake Structure
- Control Section
- Water Conveyance (channels, conduits, and tunnels)
- Energy Dissipation Section
- Return Channel

UNIT OBJECTIVES

After completing this unit, you will be able to . . .

- Describe deficiencies common to submerged and nonsubmerged entrance channels.
- Identify problems common to outlet works intake structures.
- Explain deficiencies that commonly occur in a spillway control section, and outline the steps needed to check for those deficiencies.
- Identify conditions common to gate and valve housings.
- Describe problems that affect open channels, conduits, and tunnels, and list the areas to check during an inspection.
- List deficiencies often found in the energy dissipation section, and explain how various energy reduction and control structures can experience problems.

The focus is on problems specific to components, apart from overall spillway and outlet works problems discussed in Unit II.

IV. INSPECTING THE COMPONENTS: ENTRANCE CHANNEL

WHAT IS THE ENTRANCE CHANNEL?

If a spillway or an outlet works has an entrance channel, this component is located upstream of all other components in the structure. The entrance channel is an open channel that conveys water from the reservoir to the control section or intake structure, and may be submerged or non-submerged.

NON-SUBMERGED ENTRANCE CHANNELS

To function as designed, a non-submerged entrance channel should provide an obstruction-free, uniform distribution of flow to the control section or intake structure. Common sites for non-submerged entrance channels are on spillways located at abutments or through saddles and ridges, and in outlet works used for irrigation or similar purposes. An entrance channel for an outlet works may be exposed in a dry dam or in a reservoir with a low water level, and yet function as a submerged channel when the outlet works operates. A channel which is not submerged at time of inspection may be considered non-submerged for inspection purposes.

Types Of Non-Submerged Entrance Channels

Non-submerged entrance channels may be lined or unlined. Unlined channels may be armored with a variety of materials, and can be excavated in rock or soil. Where possible, a soil channel should at least be vegetated to minimize erosion.

Channel liners may be constructed of:

- Concrete
- Asphaltic concrete
- Soil cement, roller-compacted concrete (RCC), or shotcrete
- Riprap
- Gabions

Elements Of A Non-Submerged Entrance Channel

A non-submerged entrance channel consists of the following elements:

- Channel floor
- Channel walls
- Floating trash boom (optional). A trash boom is required across most non-submerged entrance channels.

Figure IV-1 shows sections of an unlined channel excavated in rock, a lined channel with concrete walls and a riprap floor, and a plan view of an entrance channel with a trash boom.

Continued . . .

Elements Of A Non-Submerged Entrance Channel (Continued)

FIGURE IV-1. TYPICAL NON-SUBMERGED ENTRANCE CHANNELS

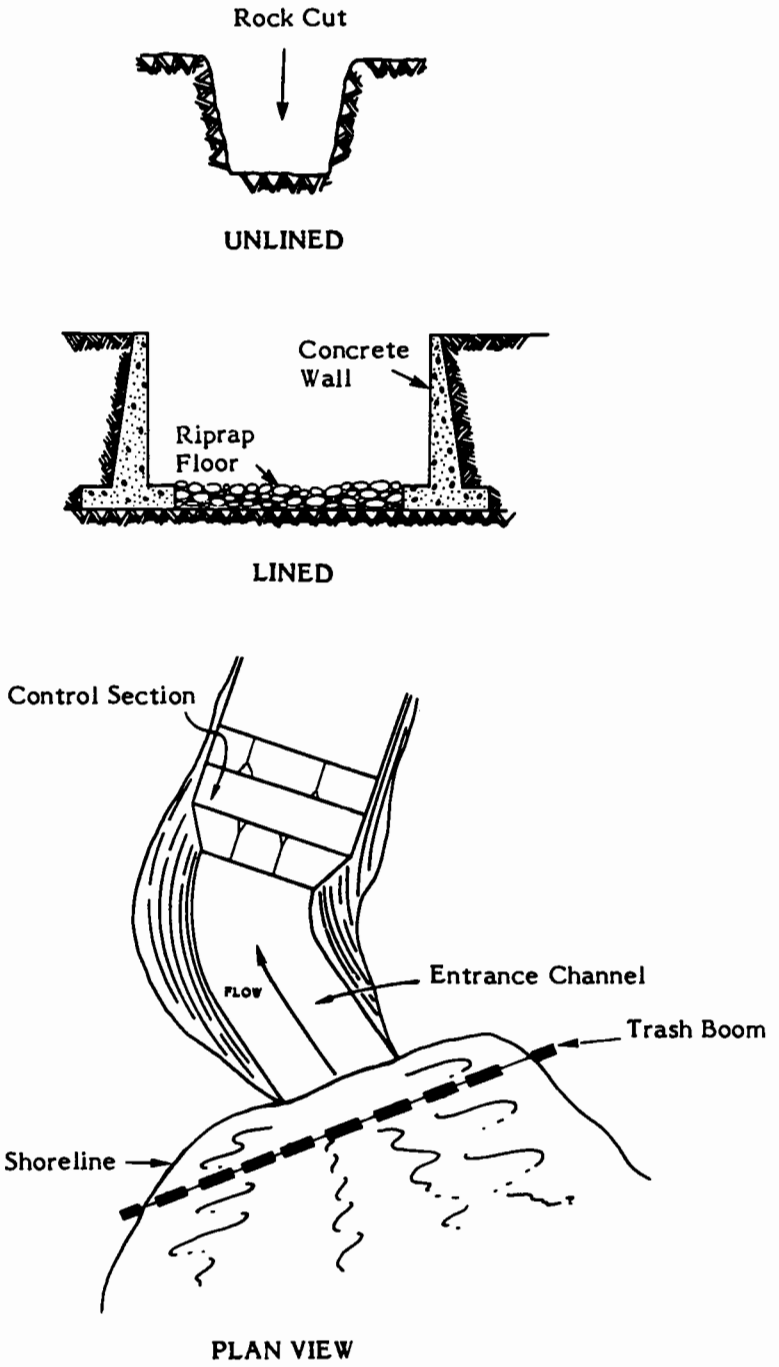

IV. INSPECTING THE COMPONENTS: ENTRANCE CHANNEL

Typical Problems With Non-Submerged Entrance Channels

Failure of the entrance channel may block flow to the spillway or outlet works entirely, greatly reduce the flow capacity, or cause flow irregularities that impinge upon or overtop channel walls. As a result, the reservoir may be raised above safe levels, and the dam may even be overtopped.

Non-submerged entrance channels may be affected by:

- **Deterioration Of Materials.** Slope and wall failure may result when surface materials deteriorate. To inspect for deterioration of surface materials, perform the actions listed in Table IV-1: Inspecting Non-Submerged Entrance Channel Materials.

TABLE IV-1. INSPECTING NON-SUBMERGED ENTRANCE CHANNEL MATERIALS

Material	Inspection Point	
Concrete	✓	Check concrete linings for cracks, displacement, and erosion.
	✓	Sight along the walls to make sure that they have not moved.
RCC, Soil Cement, And Shotcrete	✓	Check for cracks and erosion.
Asphaltic Concrete	✓	Check for cracks, erosion, and disintegration.
Earth	✓	Note any severe erosion gullies.
Rock	✓	Look for excessive deterioration of rock in natural rock channels.
	✓	Check riprap for weathering, deterioration of stone, and slides in side walls.
Gabions*	✓	Note signs of gabion settling or rock deterioration.
	✓	Check baskets for rusted, broken, cut, or deformed wires.

***Note:** Gabions are wire "cages" filled with rocks that can be piled up for slope stabilization.

Continued . . .

Typical Problems With Non-Submerged Entrance Channels (Continued)

- **Obstructions.** Non-submerged entrance channels may be obstructed by:

  - Vegetation
  - Debris
  - Sediment
  - Fallen rocks
  - Trees
  - Snow/ice dams
  - Manmade structures (e.g., boat docks, etc.)

  To inspect for obstructions in the entrance channel, take these actions:

  ✓ Check the trash boom for excessive debris. The floating trash boom protects the width of the channel, as shown in Figure IV-1.

  ✓ Check the channel for debris.

  ✓ Make sure the maintenance guidelines for the dam site include preventing ice buildup in the control section and possible removal of accumulated snow.

  ✓ Record the type, location, and extent of any obstruction.

- **Slope And Wall Failure.** When inspecting the entrance channel for slope and wall failure, do the following:

  ✓ Examine the side slopes or walls for slides, movement, cracks, or wet spots. Check for foundation undermining by flow from springs.

  ✓ Look at the topography above the channel for signs of instability, such as sinkholes or slumps behind the spillway walls. If you see soil loss with seepage, look for an exit point.

  ✓ Check for indications of poor drainage, such as seepage and clogged weepholes or drains.

- **Poor Floor Condition Or Stability.** Check these points when examining the entrance channel floor:

  ✓ If the channel has an earth lining:

  - Look at the toe of the channel slope for wet areas.

  - Check for erosion, sinkholes, and lack of vegetation.

Continued . . .

Typical Problems With Non-Submerged Entrance Channels (Continued)

- ✓ Check foundations for signs of undermining by flow from springs.
- ✓ Look for signs of poor drainage, such as seepage and clogged weepholes or drains.
- ✓ Inspect for voids under a concrete floor, using a bonker or a hammer. (Another device that may be used is a "chain drag," which is a series of chains fastened to a bar. Concrete is sounded by dragging the chains over a surface. This device is used to test large areas.)

- **Concrete Deterioration From Wetting/Drying.** Concrete deteriorates from wetting and drying as the water level rises and falls, and from damage caused by freeze/thaw cycles. The waterline of the entrance channel needs to checked for cracking, scaling, and crumbling of the concrete surface.

- **Wave Erosion.** Check earth or riprap lining for beaching from wave erosion. The overly-steep channel slope above the beach may fail. Figure IV-2 shows wave erosion.

FIGURE IV-2. WAVE EROSION

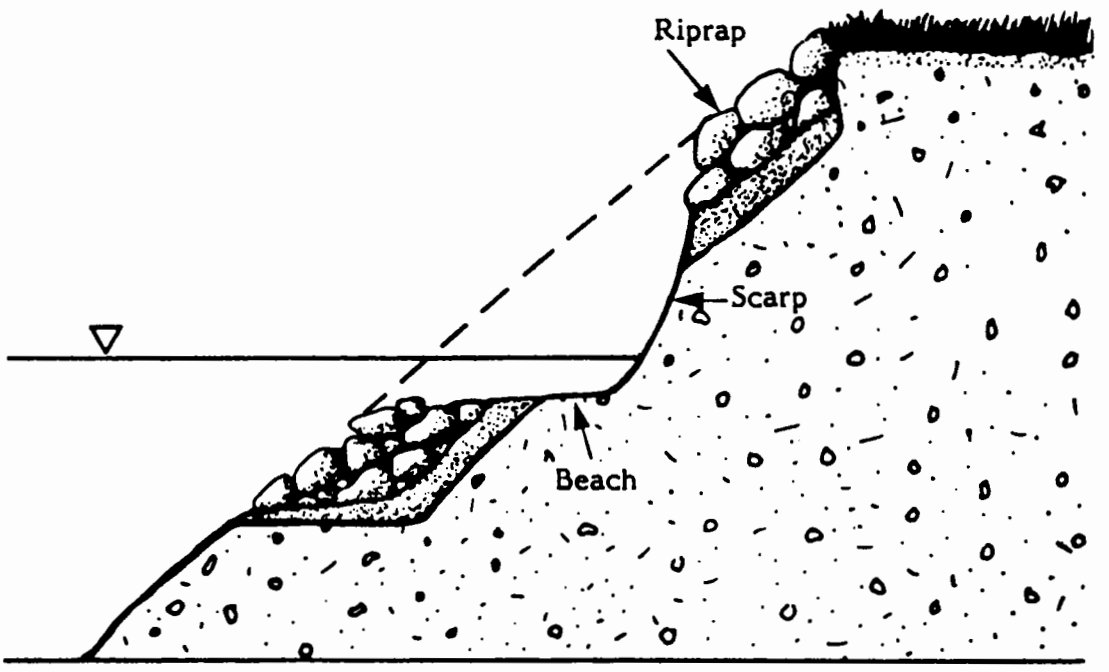

Continued . . .

Typical Problems With Non-Submerged Entrance Channels (Continued)

- **Damaged Trash Boom.** Trash booms have two purposes: to catch debris and to provide a safety barrier for boaters and swimmers. A variety of designs and materials may be used to construct floating booms. Buoyancy is often gained by using wood in the structure. Figure IV-3 shows side and front views of floating trash booms with a network of chains and cables extending under the water surface to catch debris. A boat and/or divers may be needed to inspect a trash boom adequately. Check the following parts:

  ✓ Look for loose or missing anchorage.

  ✓ Check for waterlogged and submerged wooden members.

  ✓ Inspect the structure for broken, bent, and missing parts.

FIGURE IV-3. EXAMPLES OF TRASH BOOMS

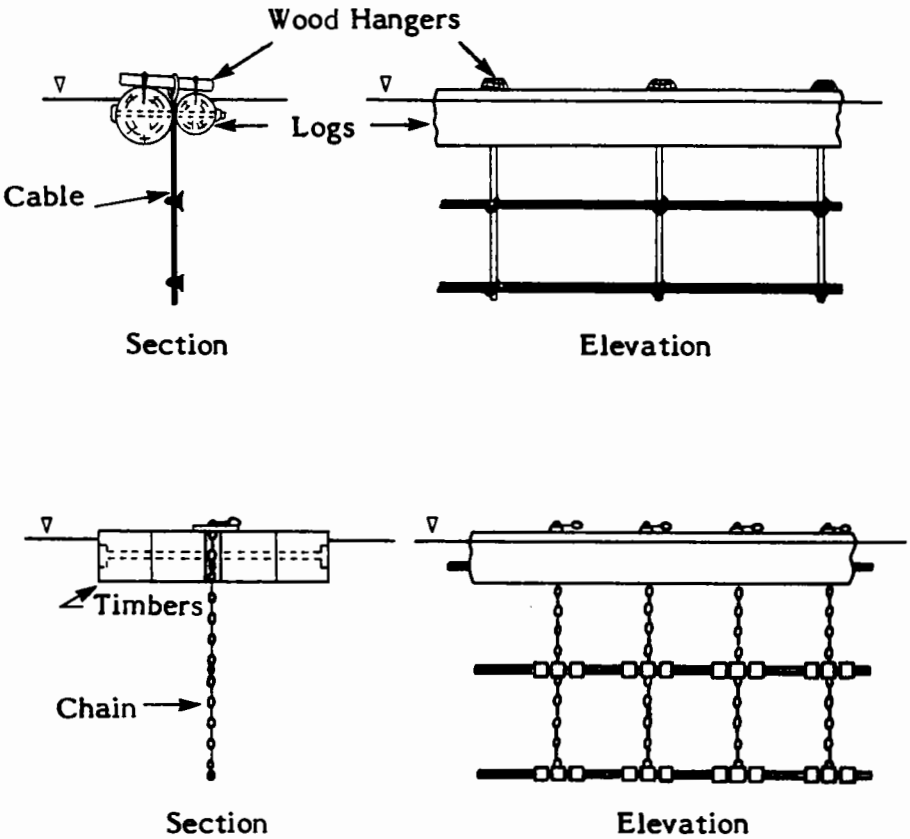

Continued . . .

Typical Problems With Non-Submerged Entrance Channels (Continued)

- **Insufficient Capacity.** If you see evidence of overtopping and a flow restriction does not appear to be a contributing factor, recommend that a hydrologic study be conducted to see whether the entrance channel can satisfy operational requirements.

SUBMERGED ENTRANCE CHANNELS

The entrance channel for an outlet works directs flows to an intake structure. The submerged entrance channel is normally constructed by excavating a channel to the intake structure. The channel may be lined or unlined, depending on the erodibility of the natural ground, and is generally submerged after the reservoir is filled. Figure IV-4 shows the configuration of a submerged channel.

FIGURE IV-4. SUBMERGED ENTRANCE CHANNEL

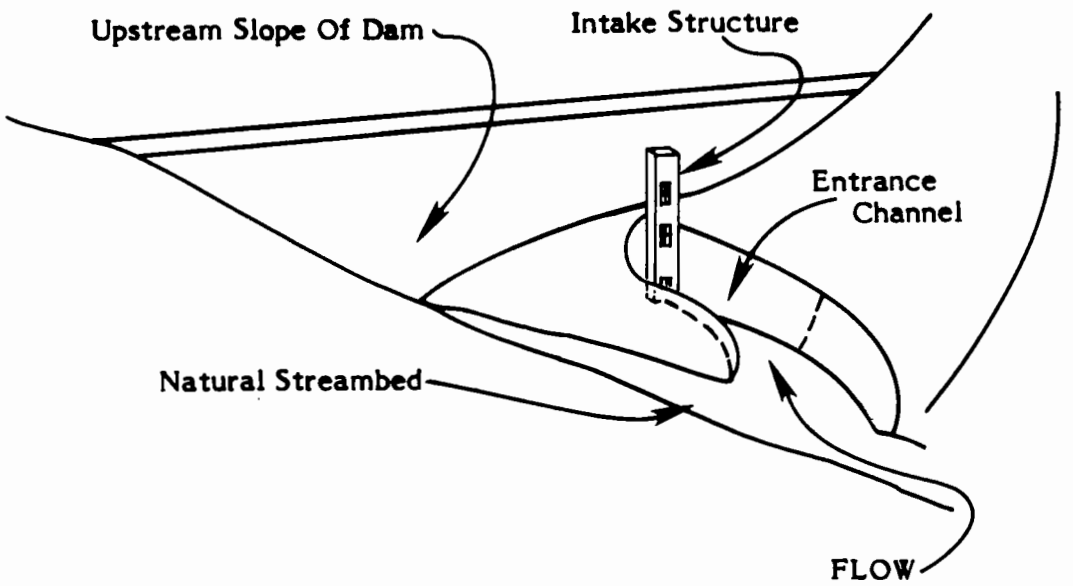

IV. INSPECTING THE COMPONENTS: ENTRANCE CHANNEL

Typical Problems With Submerged Entrance Channels

Submerged entrance channels are less accessible than non-submerged channels. Typical problems--like slope instability and obstructions--can be difficult to detect.

One problem that can occur with entrance channels is instability of unlined sloped sides (showing up as slumps and slides). Slope instability is most likely to develop during drawdown or other stress, such as seismic activity, or as a result of excessive internal pore pressures from higher-than-usual reservoir levels. Sudden mudflows or turbid water from the outlet may be indicative of an underwater slide. If a slump or slide occurs, the slumped material may restrict or even block the flow of water to the intake. If slope instability is developing or has occurred, you may need to make one or more of the following recommendations:

- Stability control measures such as riprap or gabion placement may be required immediately. Any materials blocking the channel must be removed.
- An engineering study to determine causes of the instability may be required.
- A monitoring program to measure changes should be installed.

Obstructions that can restrict the flow of water through a submerged entrance channel include:

- Siltation
- Slides or slumps
- Submerged trash buildup
- Aquatic vegetation such as water hyacinths (in shallow water)
- Beaver dams (in shallow water)

Restricted flow may be indicated by a lowered water rate when outlet works control settings have not changed. A review of operational records should indicate such a problem. Lowered flow rate also might be reported by water users. If the restriction is too severe and the outlet works is relied upon for passing floods, then overtopping of the dam may result.

If your inspection reveals a flow restriction due to trash, sediment, animal activity, or vegetation, you may need to make the following recommendations:

- The obstructive material should be removed immediately.
- Maintenance procedures should call for more frequent inspection by operational personnel, and more frequent trash or sediment removal.

Continued . . .

Typical Problems With Submerged Entrance Channels (Continued)

- The anticipated trash burden based on use of the reservoir may need re-evaluation; the installation or improvement of trashracks may be warranted. For example, if large debris is getting between bars of the trashrack, a trashrack with smaller openings is probably needed. On the other hand, if relatively harmless debris such as grass is clogging the structure, a trashrack with larger spaces may be more appropriate.

- Soil conservation measures upstream of the dam may need evaluation if excessive silt or debris is accumulating.

IV. INSPECTING THE COMPONENTS: INTAKE STRUCTURE

WHAT IS THE INTAKE STRUCTURE?

An intake structure is the entrance to an outlet works, or may constitute the control section of a closed spillway. Intake structures may consist of some or all of the following features or elements:

- Riser or drop inlet
- Shaped entrance
- Auxiliary intakes
- Entrance transition
- Guard gate or valve
- Regulating gate or valve
- Trashrack and/or fishscreen
- Bulkhead, or stoplog closure device
- Access tower, bridge, or platform
- Ice protection system

Later in this section, we will discuss these features and deficiencies commonly associated with them. First, however, we will briefly describe the various types of intake structures.

TYPES OF INTAKE STRUCTURES

The design of the intake structure can signal possible problems. The following descriptions of different types of intake structures include some inspection advice. Additional inspection tips for intake structures are provided with the discussions of the individual components found later in this section.

Intake Structures For Concrete Dams

The intake structure for an outlet works through a concrete dam may be just an opening on the face of the dam. Appurtenances associated with the intake, such as bulkheads, trashracks, fishscreens, and control mechanisms, may be integrated into a "trashrack structure."

Risers

A riser is a simple L-shaped metal or concrete pipe that allows the reservoir to rise to a predetermined level before water flows into the pipe. Risers may have an open inlet, or may have a trashrack covering the inlet. A riser may serve as the control section of an enclosed spillway.

Drop Inlets

A drop inlet is a large intake device constructed of reinforced concrete. (Some agencies refer to such a structure as a riser.) A drop inlet may serve as the control section of an enclosed spillway.

IV. INSPECTING THE COMPONENTS: INTAKE STRUCTURE

Submerged Intake Structures

Submerged intake structures are common where little trash or sediment is expected to accumulate, and where icing is a concern. The structure serves only as an entrance to the conduit. Submerged intake structures are generally located at or near the reservoir bottom, depending on the amount of sedimentation that is anticipated for a particular site. Figure IV-5 shows one type of submerged intake structure.

FIGURE IV-5. DAM WITH SUBMERGED INTAKE STRUCTURE

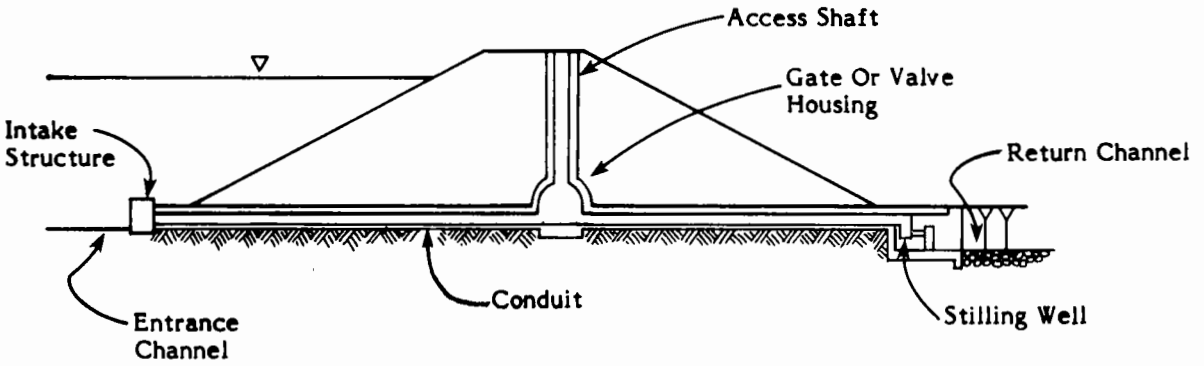

If there is significant buildup of trash or sediment, a submerged intake structure can become obstructed, leading to reduced flows or even the loss of drawdown capacity under emergency conditions. Long probes or rakes may be used to determine whether silt has accumulated at the intake, or trash at the trashrack. If inspection is not possible under dewatered conditions, serious consideration should be given to an underwater inspection, especially if there are any other indications of possible blockage.

Obstruction of submerged intake structures is most likely when reservoir levels are low, and inlets near or above the water surface can be blocked by floating debris.

IV. INSPECTING THE COMPONENTS: INTAKE STRUCTURE

Tower Intake Structures

Towers are common when it is desirable or necessary to have any or all of the following functions at the intake structure:

- Regulation of reservoir releases.
- Provisions (such as an operating platform) for trash removal, maintenance and cleaning of fishscreens, or installation of stoplogs.
- Provisions for several openings at different reservoir elevations to allow for selective withdrawal of reservoir water to control water quality characteristics (temperature, taste, odor, dissolved oxygen, minerals).

The inside of the tower may consist of a wet well or it may provide access to a control mechanism. Tower intake structures normally require an access bridge from the dam crest or reservoir rim. Figure IV-6 shows a tower intake structure. In an actual structure, trashracks would be placed over the intakes. In order to present an unobstructed view, trashracks are not shown in the Figure.

FIGURE IV-6. TOWER INTAKE WITH BRIDGE

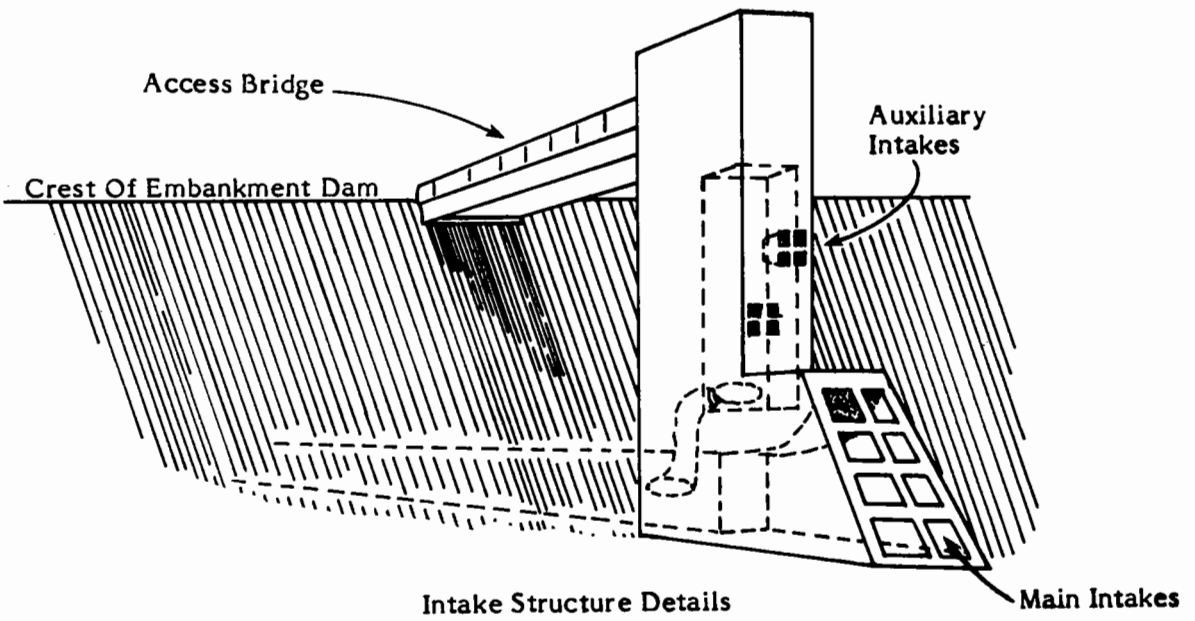

Inclined Intake Structures

Inclined intake structures are usually placed on the upstream slope of the dam or along the reservoir bank upstream of the dam. Depending on particular requirements and site conditions, inclined intake structures may be completely submerged, or extend above the maximum water surface elevation to provide the capability for gate operation at all reservoir levels.

Inclined intakes that extend above the water surface usually provide the same functions as a tower structure. Inclined intakes are often selected when sedimentation and stability concerns at a particular site are significant. Figure IV-7 shows an inclined intake structure.

FIGURE IV-7. INCLINED INTAKE STRUCTURE

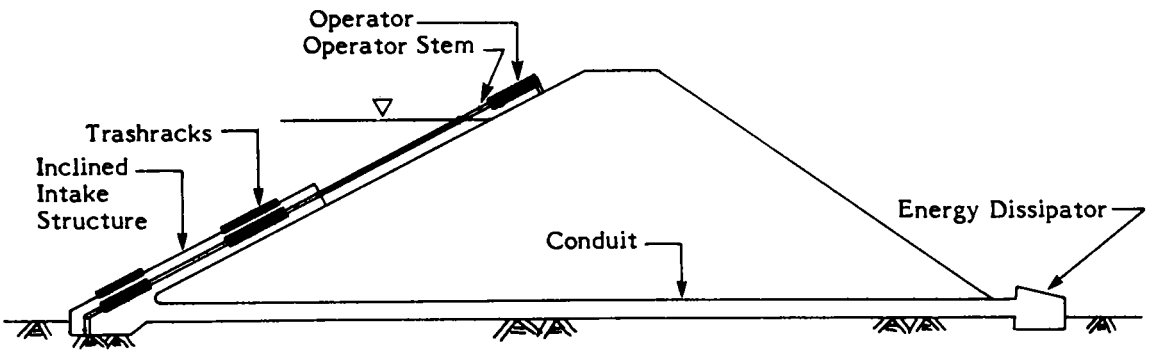

Auxiliary Intakes

An auxiliary intake may be attached to the main intake structure. Typical functions include diversion during construction or maintenance, low-flow releases, and/or selective withdrawal. Auxiliary intakes are commonly located low in the reservoir and provide water to a small conduit. Appurtenances such as trashracks and control mechanisms that may be required for an auxiliary intake are similar to those required for a main intake structure. Figure IV-6 illustrated auxiliary intakes on a tower structure.

INSPECTING INTAKE STRUCTURE ELEMENTS

Problems Common To All Types Of Intake Structures

Listed below are some general problems associated with all types of intake structures. Specific issues related to individual intake structure elements are detailed in the paragraphs that follow.

- **Deterioration of materials** - Intake structures that extend above the water surface may be subjected to accelerated deterioration from wetting and drying as the reservoir level rises and falls, and to freeze/thaw damage. If an intake is constructed of coated metal, look for rust holes, especially at the ground line. Crack maps should be used or prepared while inspecting a concrete intake structure. Indications of new or worsened conditions should be noted. There is a sample crack map later in this section (Figure IV-26).

- **Structural damage to an intake structure** - Structural damage may be indicated by a flow of water that continues into a conduit even when the reservoir level is below the opening of the intake structure, or when the gate is closed. Consult an experienced and qualified engineer for an evaluation of possible structural problems.

- **Misalignment of an intake structure** - Misalignment may indicate movement of the abutments or other serious structural problems that threaten the integrity of the dam. Consult an experienced and qualified engineer for an evaluation.

In the paragraphs that follow, descriptions of the elements of an intake structure are accompanied by specific points to check during your inspection and recommendations to make in your report.

IV. INSPECTING THE COMPONENTS: INTAKE STRUCTURE

Access Bridge To Intake Structure

If the intake structure is reached by an access bridge from the dam crest or reservoir rim, the bridge is the first component you will normally encounter (unless your inspection is being made from a boat). Materials in the access bridge should be checked for the following deficiencies:

- ✓ On wooden bridges and railings, look for rot, broken members, and insect damage.
- ✓ Look for bowed or bent beams.
- ✓ On concrete bridges, check joints and water runoff points for exposed metal and corrosion of reinforcement steel.
- ✓ Check for peeling or missing paint.
- ✓ On steel flashing over joints, inspect for breakdown of welds or mechanical connectors, couplings, and flanges.
- ✓ Look for loose or insecurely anchored guardrails.
- ✓ Check the condition of previously repaired areas.

Check bridge supports as follows:

- ✓ On concrete bridge supports built into the entrance channel or the reservoir, look for stress or frost cracking.
- ✓ Check the bearing supports at the abutments for condition and evidence of movement.
- ✓ Look for misalignment or damage at sliding joints.

Stoplogs

Stoplogs may be logs, barrels filled with flotation material, timbers, or steel beams placed on top of each other, with their ends held in guides on each side of a channel or conduit, to provide an inexpensive and easy way of closing the waterway. Before using stoplogs for dewatering, you must determine if the structure is adequately designed given the present loading of the reservoir. Refer to Figure IV-19 for an illustration of stoplogs.

Bulkheads

A bulkhead is used for sealing off an intake structure to dewater the outlet works for inspection and maintenance. Bulkheads may also be required for emergency closures, and should therefore be operational at all times. Bulkheads for a submerged intake may require a barge and divers for placement. Some installations include a gantry crane for placing the bulkhead. Figure IV-8 shows one type of bulkhead; many variations of bulkhead designs are currently in use.

FIGURE IV-8. INTAKE STRUCTURE WITH BULKHEAD

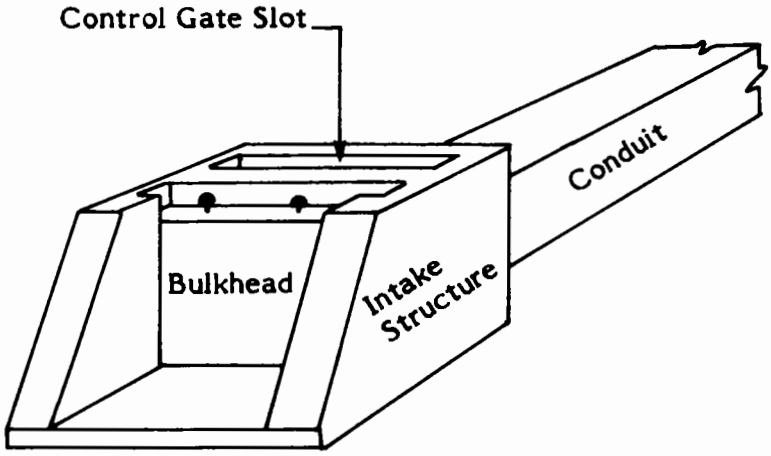

Due to their size and weight, bulkheads are usually stored outside, somewhere in the vicinity of the dam. If bulkheads have not been maintained properly, they may be unusable or require significant repairs. In planning for your inspection, you should discuss test operation of a bulkhead with the owner so that by the time of the inspection it will be ready for use. Nevertheless, before attempting to use a bulkhead, try to assess its adequacy under present load conditions. Do not assume that previous use of a bulkhead means it is safe for present use.

☞ **INSPECTION TIP:** Be especially cautious if a temporary bulkhead is fabricated for inspection purposes. Do not endanger the inspection team in the interest of expediency.

IV. INSPECTING THE COMPONENTS: INTAKE STRUCTURE

Assessing The Adequacy Of A Bulkhead

A qualified and experienced engineer should have assessed the bulkhead for structural adequacy. If the bulkhead fails any of the following checks it will **not** be possible to test-operate it.

- ✓ The current reservoir level should be compared with the level anticipated by the designers. If the normal reservoir level has been increased since the original design, the bulkhead should have been strengthened (or conservatively designed in the first place) so that it could withstand the increased load.

- ✓ If any equipment (for example, a gantry crane) is to be used for bulkhead placement, the condition of the equipment must be assessed before attempting to install the bulkhead.

- ✓ Your organization may require the owner to formally certify the adequacy of the bulkhead and related equipment, and the conduit, before the outlet works is dewatered.

Inspecting The Bulkhead For Operational Deficiencies

Once you have checked the bulkhead for structural adequacy as described above and are convinced it is safe to use, the bulkhead and its supports should be tested for operational deficiencies.

- ✓ Bulkhead guides above the water should be examined to determine that they are serviceable.

- ✓ When the bulkhead is placed in the conduit opening, if it binds or will not slide into place, do not attempt to force it. If the binding or obstruction occurs below water level, an underwater inspection is warranted.

- ✓ If flow continues after placement of the bulkhead, there may be a structural problem. The source of the continued flow must be determined.

Making Bulkhead Recommendations In Your Report

If an intake structure is supposed to have a bulkhead and your inspection shows that bulkhead to be unsafe or inoperable, refer the matter to an experienced and qualified engineer, who may make any of the following recommendations.

- The bulkhead and/or its guide slots should be repaired.

- Storage and/or maintenance procedures should be revised for better operability.

Continued . . .

Making Bulkhead Recommendations In Your Report (Continued)

- Equipment for placing the bulkhead under emergency situations should be repaired (or provisions for such equipment should be made).
- The bulkhead should be redesigned, if necessary.

If you have determined that a bulkhead cannot be used during your inspection, it may be necessary to reschedule part of the inspection for a time when divers and/or underwater video equipment will be available. The decision regarding an underwater inspection will depend, in large part, on the remaining observations the inspection team is able to make without dewatering the facility as planned.

Trashracks

The next element of an intake structure to consider is the trashrack. A trashrack is a grate made of metal or reinforced concrete bars that is placed across an intake structure to prevent waterborne debris above a certain size from entering the waterway. Trashracks that are submerged are in a stable environment and are not especially prone to deterioration. However, occasional or periodic exposure to the air can accelerate corrosion. Figure IV-9 shows a trashrack for a submerged tower intake.

Ice loads can damage trashracks or their supports, especially if the reservoir elevation changes substantially after ice has formed on the intake structure.

Debris can clog or damage trashracks. Damaged or missing sections of a trashrack can allow debris to pass through the outlet works, damaging equipment located downstream. If debris is causing loss of capacity, localized high velocity and vibration may cause deterioration elsewhere in the structure during heavy flows.

☞ **INSPECTION TIP:** It is not always advisable to remove trashrack panels. If even a small limb flows into the opening, it may prevent reinstallation of the trashrack panel.

Continued . . .

Trashracks (Continued)

FIGURE IV-9. TRASHRACK

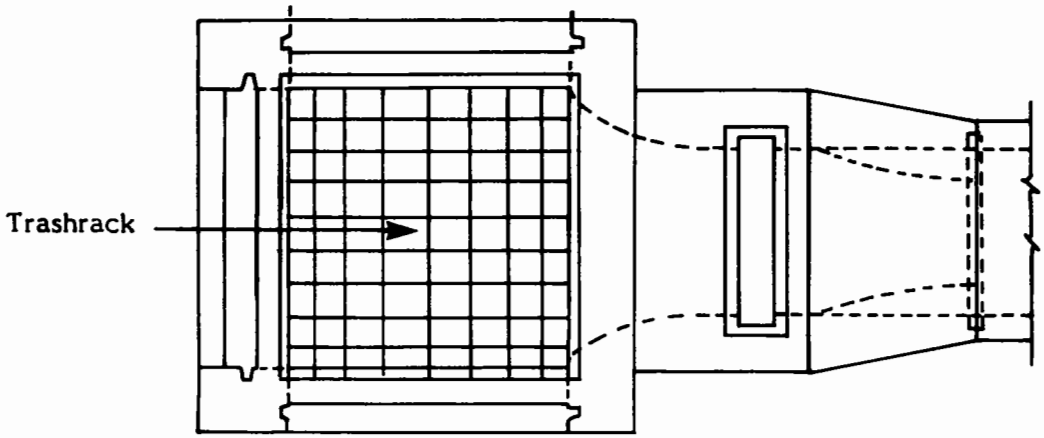

Plan View

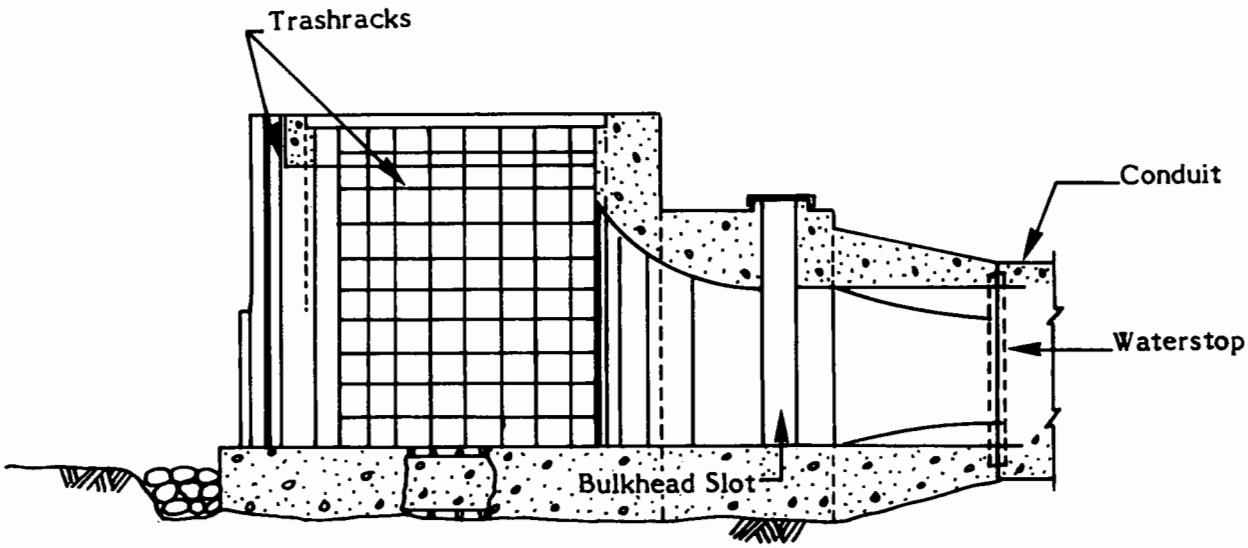

Section

Continued . . .

Trashracks (Continued)

A decrease in the discharge capacity of the outlet works is one indication of possible trouble with trashracks. Trashracks are often submerged and cannot be examined in the dry. If it is not possible to check a trashrack by probing and there is some indication of trouble with the trashrack, consider the use of a diver.

When you inspect a trashrack . . .

- ✓ Remove any debris from the trashrack. After debris is removed, check for damage to bars and struts.
- ✓ Check trashrack panels for corrosion, broken welds, and broken, bent, or missing bars.
- ✓ Check the condition of the concrete supporting the trashrack.
- ✓ If a significant amount of trash had been obstructing flow, try to estimate the percentage of obstruction. Assess related sections of the structure for evidence of damage from vibration.
- ✓ Recommend changes in the maintenance procedure so that trash is removed more frequently.
- ✓ Describe any necessary repairs, and indicate a timeframe, if necessary.

Fishscreens

Fishscreens can be used independently or in combination with trashracks. The openings are generally quite small and therefore more susceptible to plugging than the openings on trashracks. Periodic cleaning ("brooming" and spraying) of fishscreens is important. The problems associated with fishscreens are essentially the same as trashrack problems.

Ice Prevention Systems

In climates where ice can form around an intake structure and impair reservoir drawdown or evacuation capabilities, ice prevention systems may be in place. An ice prevention system consists of equipment for releasing compressed air below the components that are at risk. Air bubbles rising to the surface prevent the formation of ice. Satisfactory operation of ice prevention systems should be checked.

IV. INSPECTING THE COMPONENTS: INTAKE STRUCTURE

Shaped Entrances

Entrances into or within intake structures are usually rounded or otherwise specially shaped to streamline the flow of water and minimize hydraulic losses. Even so, localized zones of negative pressure resulting from rapid change in direction or discontinuities can cause vibration and/or cavitation damage.

- ✓ Look for damaged concrete and exposed reinforcing steel.
- ✓ If any portion of the entrance is lined with steel, ensure that no portion of the steel liner is loose or missing.

Entrance Transitions

Intake structures that house controls often have specially formed entrance transitions through the control areas. If this portion of the structure is subject to high-velocity flow, it may be steel-lined, possibly with a coating. The liner surface can be damaged by cavitation, corrosion, or vibration. If steel plates are loose or missing, cavitation damage to the concrete can occur, which in turn could expose the reinforcing steel.

When inspecting the intermediate water passage of an intake structure . . .

- ✓ Check for surface deterioration immediately downstream of all discontinuities such as gate slots, liner plates, air vents, or side entrances to selective withdrawal or low-flow discharge systems.
- ✓ Try to determine the remaining thickness of the metal.

Guard Or Regulating Gates Or Valves

Inspection of the part of the intake structure encasing or housing a guard or regulating gate or valve is described in the next section of this unit. Inspection of the actual control device is covered in the TADS module Inspection And Testing Of Gates, Valves, And Other Mechanical Systems.

IV. INSPECTING THE COMPONENTS: EXERCISE

INSTRUCTIONS: Use the information presented in this section of the unit to answer the following questions. When you have completed all of the questions, check your answers against those presented in the answer key. The answer key can be found immediately following this exercise.

1. Name two common obstructions to the submerged entrance channel of an outlet works.

   - _____
   - _____

2. What are the worst possible consequences of blockage in a non-submerged entrance channel to a spillway?

   _____

   _____

3. An unlined spillway entrance channel can have a surface of _____ or _____.

4. List three of the types of outlet works intake structures discussed in this section.

   - _____
   - _____
   - _____

5. What course of action should you consider if you encounter a submerged intake structure that cannot be dewatered?

   _____

   _____

Continued . . .

IV. INSPECTING THE COMPONENTS: EXERCISE

6. What must you do before attempting to use a bulkhead in an inspection?

_____

_____

7. Name three deficiencies that are commonly encountered in the inspection of a trashrack.

- _____
- _____
- _____

8. What is the purpose of a shaped entrance?

_____

_____

IV. INSPECTING THE COMPONENTS: EXERCISE — ANSWER KEY

INSTRUCTIONS: Compare your answers to those given below to see how well you learned the information presented in this section of the unit.

1. Name two common obstructions to the submerged entrance channel of an outlet works.

   Any two of the following:

   - **Aquatic vegetation (in shallow water)**
   - **Siltation**
   - **Slides or slumps**
   - **Trash buildup**
   - **Beaver dams (in shallow water)**

2. What are the worst possible consequences of blockage in a non-submerged entrance channel to a spillway?

   The blocked entrance channel might prevent release of flows through the spillway. The dam could be overtopped, and possibly could fail.

3. An unlined spillway entrance channel can have a surface of **earth** or **rock**.

4. List three of the types of outlet works intake structures discussed in this section.

   Any three of the following:

   - **Inclined intake**
   - **Submerged intake**
   - **Tower intake**
   - **Intake for a concrete dam**
   - **Auxiliary intake**

5. What course of action should you consider if you encounter a submerged intake structure that cannot be dewatered?

   You should consider an underwater inspection, especially if there are indications of blockage of the intake.

6. What must you do before attempting to use a bulkhead in an inspection?

   Assess its structural adequacy.

Continued . . .

IV. INSPECTING THE COMPONENTS: EXERCISE — ANSWER KEY

7. Name three deficiencies that are commonly encountered in the inspection of a trashrack.

   Any three of the following:

   - **Corrosion**
   - **Broken welds**
   - **Broken, bent, or missing bars**
   - **Damage to the concrete supporting the trashrack**
   - **Obstruction by trash or debris**

8. What is the purpose of a shaped entrance?

   To streamline the flow of water and minimize hydraulic losses.

IV. INSPECTING THE COMPONENTS: CONTROL SECTION

WHAT IS THE SPILLWAY CONTROL SECTION?

The spillway control section receives the flow of water, either from the entrance channel or directly from the reservoir, and usually directs the flow into a discharge channel, conduit, or tunnel. In some spillways, the control section releases water directly to the energy dissipation section, return channel, or streambed. The control section determines when water will be released through a spillway, preventing outflows below fixed reservoir levels and regulating the volume of releases when the reservoir is above those levels.

Control is fixed by:

- Control section geometry
- Control section dimensions
- Crest elevation
- Crest shape

Figure IV-10 illustrates the features of a spillway control section.

FIGURE IV-10. CONTROL SECTION FEATURES

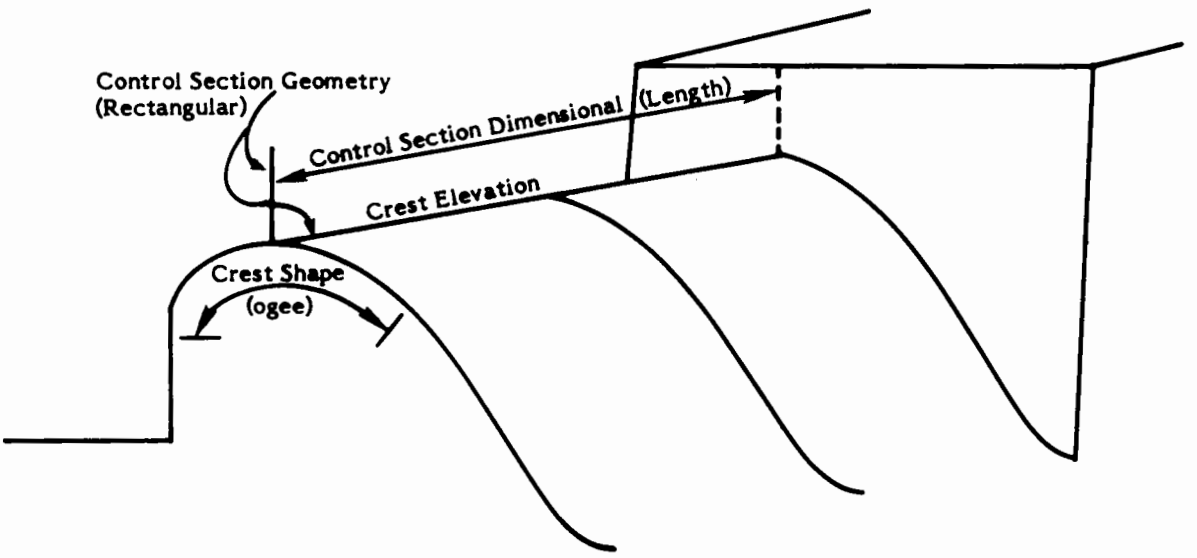

IV. INSPECTING THE COMPONENTS: CONTROL SECTION

TYPES OF SPILLWAY CONTROL SECTIONS

There are three main types of spillway control sections:

- Unlined control sections
- Lined control sections
- Fuseplug control sections

Unlined Control Sections

Most unlined control sections are open channel, usually on a level or very flat gradient, excavated in earth or rock. Nonwoody vegetation or RCC may be used to cover the earth or rock to improve its resistance to erosion. (Grass or soil cement often is used to cover earth spillways.)

Use of devices such as valves, gates, and removable barriers varies the parameters of the control.

In the case of unlined auxiliary spillways, the control section also provides a bulk length. This is a sufficient mass of material, usually in situ earth or rock, to provide a barrier against complete breaching of the spillway during rare, severe flooding.

Figure IV-11 shows plan and section views of an unlined auxiliary spillway.

Continued . . .

Unlined Control Sections (Continued)

FIGURE IV-11. TYPICAL UNLINED AUXILIARY SPILLWAY

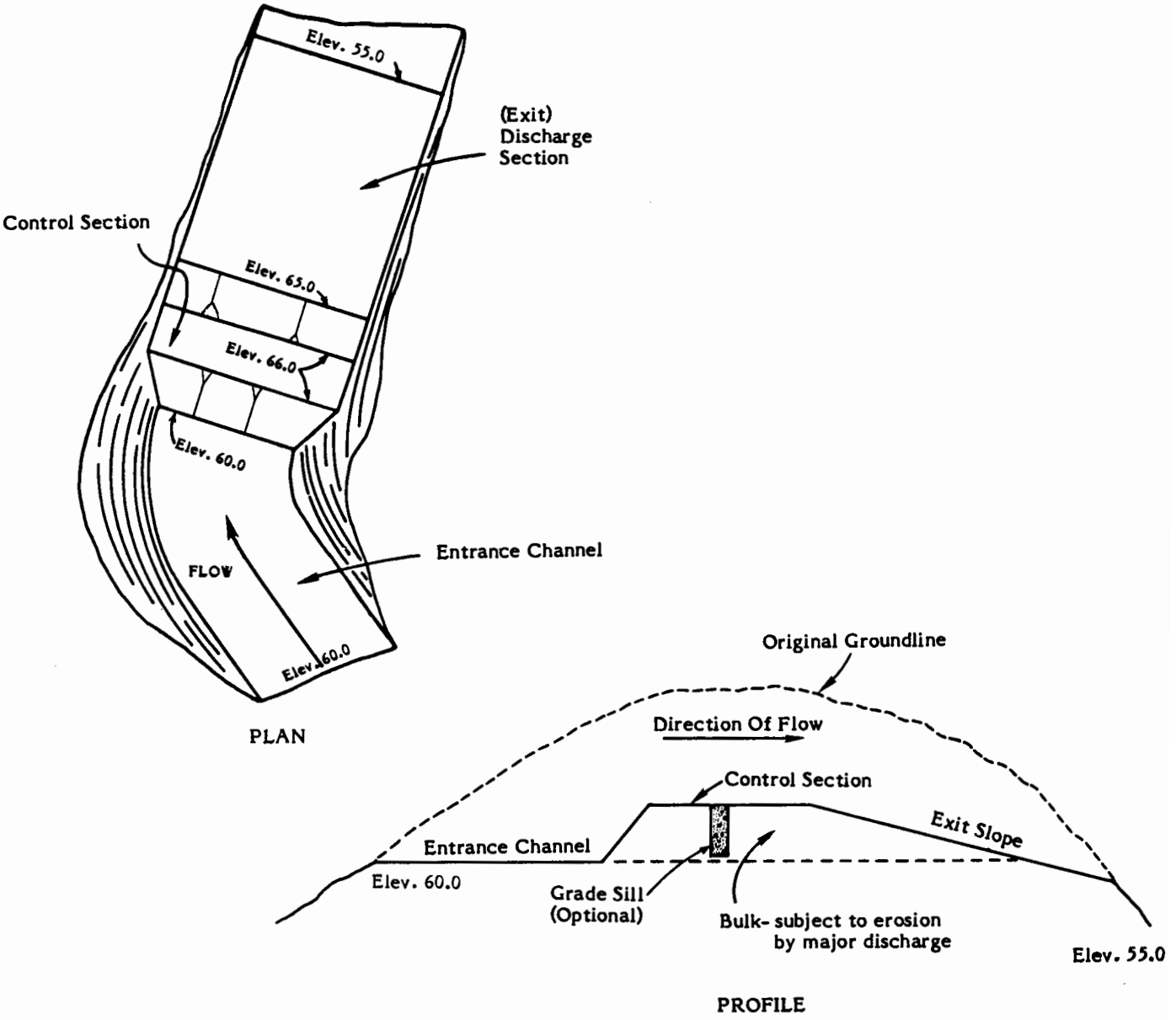

Continued . . .

Lined Control Sections

A control section consisting of a length of open channel may be lined to protect the channel walls from erosion. Lined control sections may feature devices such as weirs or orifices to regulate and direct the flow of water into the discharge channel, conduit, or tunnel.

A weir or overflow crest, usually shaped into a sill, can be constructed of concrete, RCC, riprap, gabions, wood, or metal. An orifice may be the upstream opening of a pipe or conduit, or may be a tunnel opening, and sometimes includes a specialized structure such as a drop inlet.

Fuseplug Control Sections

A fuseplug control section is a special type of spillway control that may be constructed either in a lined or unlined open channel. The fuseplug consists of an embankment of erodible material placed across a spillway, and is intended to fail in a controlled manner during rare, severe flooding. Fuseplugs often are constructed with lower elevations in the middle and with higher segments at the channel sides, so that the segments will fail in progressive stages. Figure IV-12 illustrates a fuseplug control section in a lined channel, showing the fuseplug in place and washing out during flooding. A cross-section of the fuseplug is also shown.

Continued . . .

Fuseplug Control Sections (Continued)

FIGURE IV-12. FUSEPLUG CONTROL SECTION

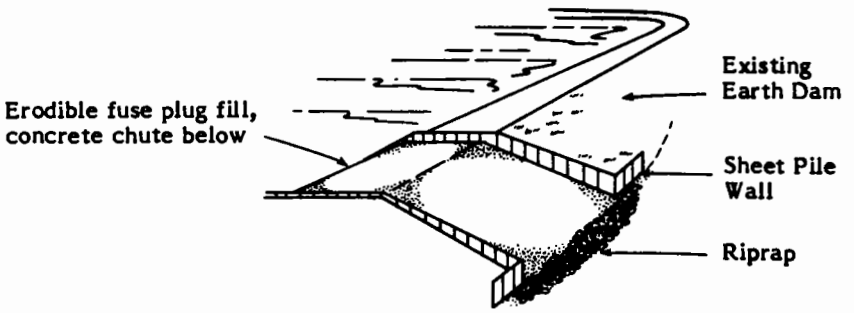

Fuseplug In Place

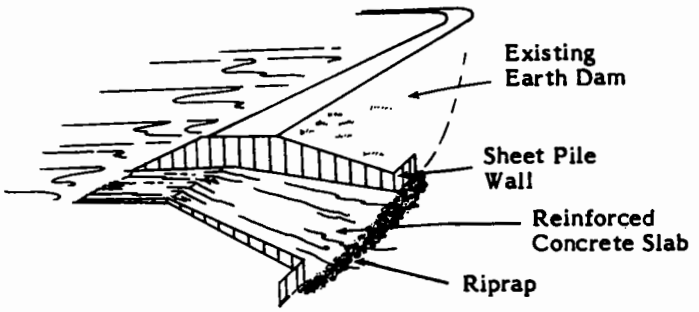

Fuseplug Eroded

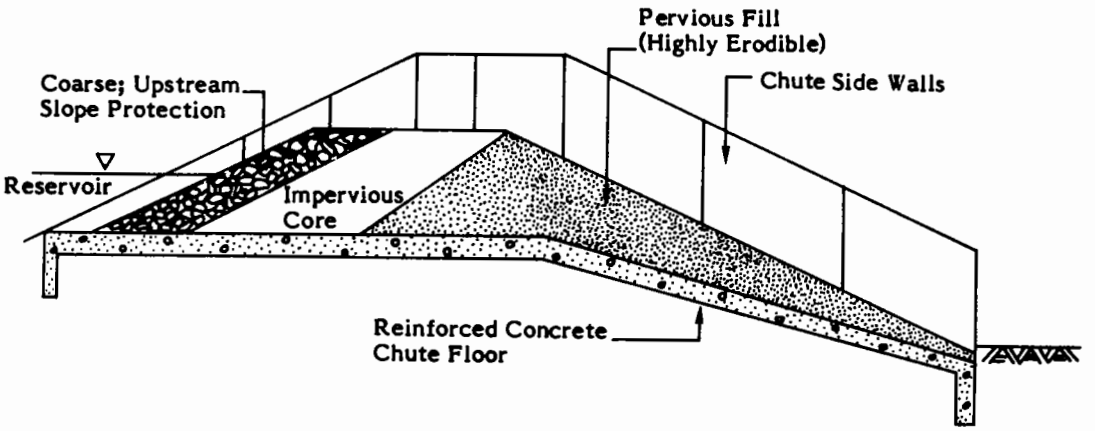

Profile

Continued . . .

TYPES OF STRUCTURES USED IN THE SPILLWAY CONTROL SECTION

A control section may include any of the following features:

- Weir or sill
- Orifice
- Tube or pipe
- Gates
- Stoplogs and flashboards
- Ancillary equipment

We will now look at each of these possible control section structures individually.

Weir Or Sill

A weir is an overflow crest in the form of a sill. Weir length, the distance across which water flows in a perpendicular direction, is one measure that helps determine how much water a weir can pass. The weir length of a straight weir is the same as the space spanned. Greater lengths can be obtained by constructing the weir in different configurations. Figure IV-13 shows typical configurations for weir lengths as viewed from above.

FIGURE IV-13. WEIR LENGTH CONFIGURATIONS

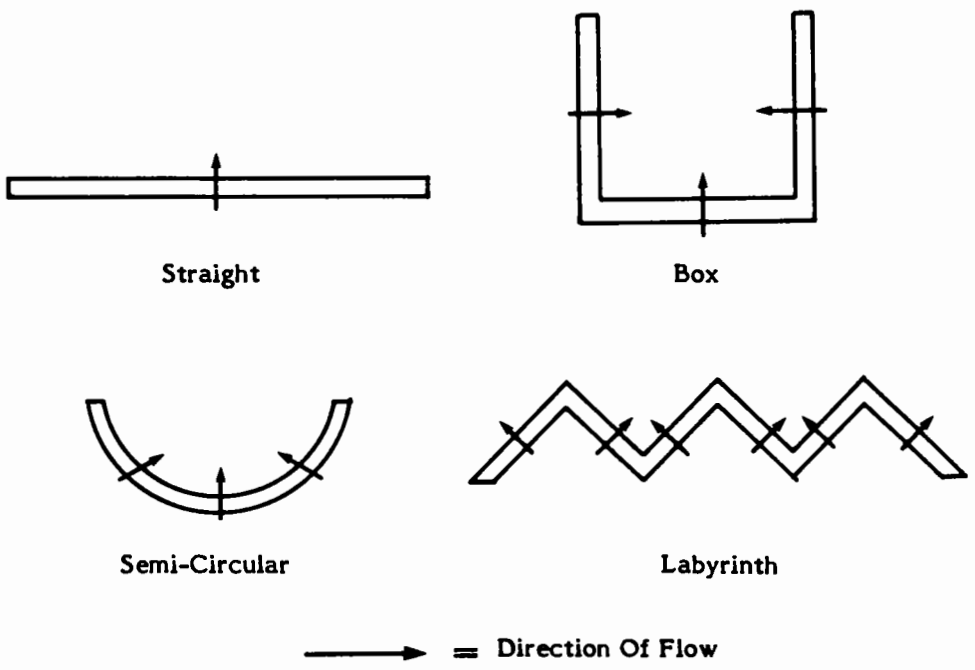

Continued . . .

Weir Or Sill (Continued)

Another type of weir is the bathtub control. Figure IV-14 shows a bathtub weir inlet.

FIGURE IV-14. BATHTUB WEIR INLET

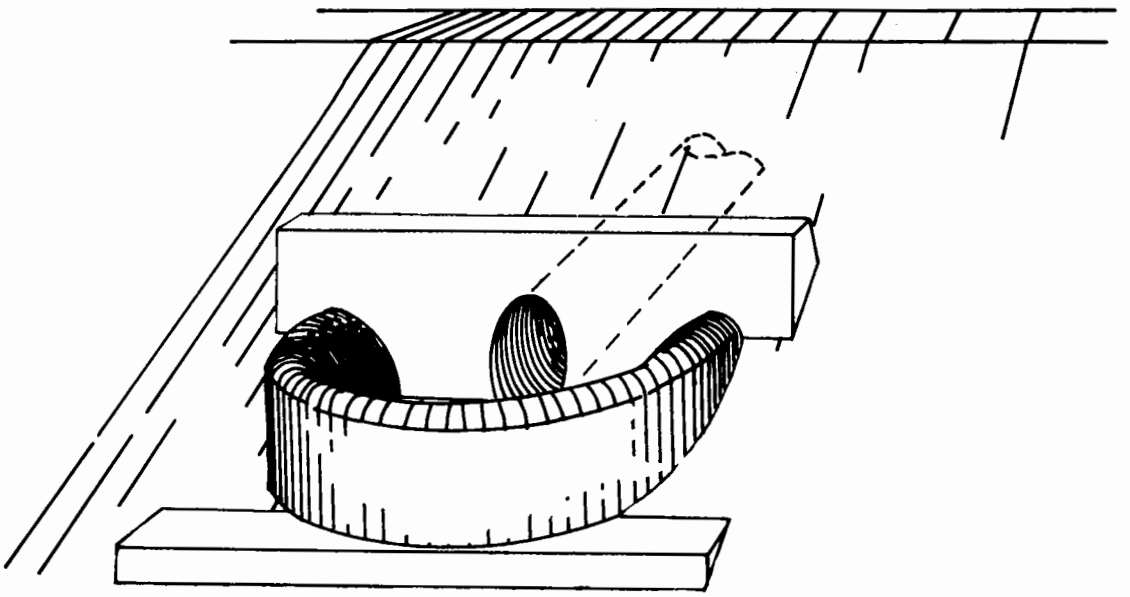

Continued . . .

Weir Or Sill (Continued)

When viewed in profile, weirs may be ogee-crested, sharp-crested, or broad-crested. Figure IV-15 illustrates these weir profiles.

FIGURE IV-15. WEIR PROFILES

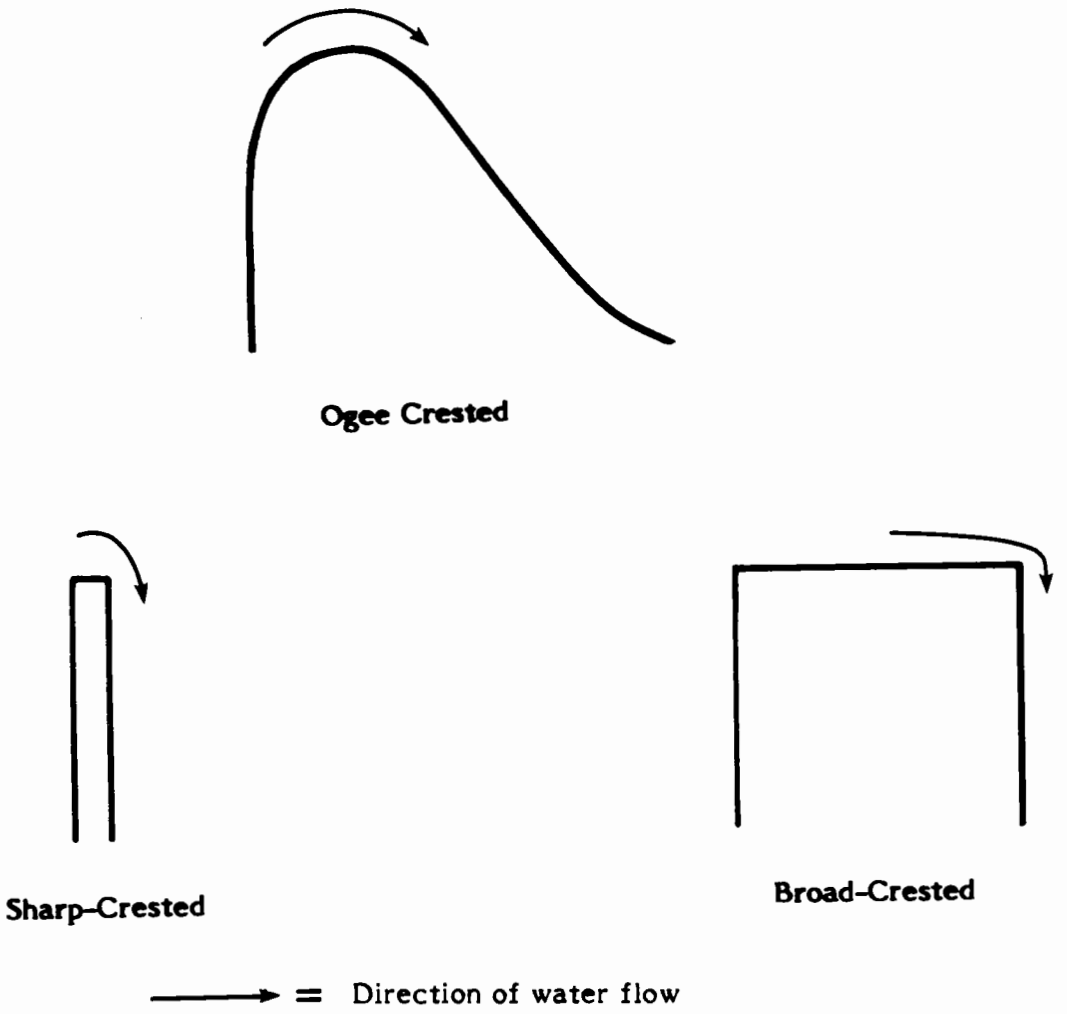

IV. INSPECTING THE COMPONENTS: CONTROL SECTION

Orifice

The size, shape, elevation, and angle of an orifice control the rate of flow to the discharge section. A drop inlet (also called a morning glory, glory hole, or shaft) is a special type of crest which is used to control flows into a closed spillway system. This type of control operates when the reservoir level rises to the point where water drops through the inlet. Figure IV-16 illustrates a drop inlet.

FIGURE IV-16. DROP INLET

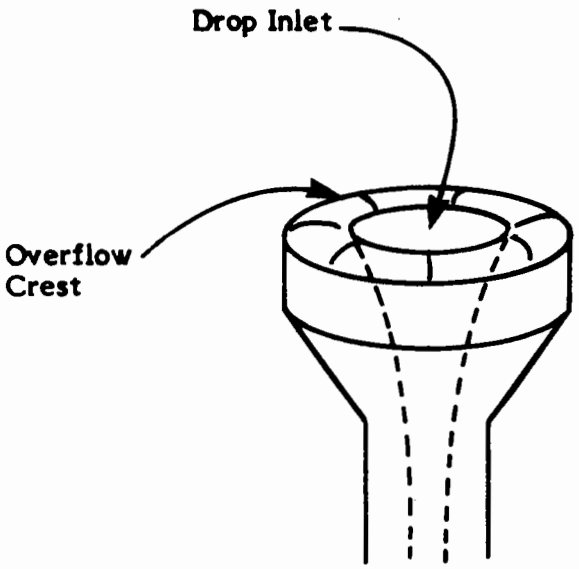

Tube Or Pipe

A tube or pipe can act as a control when designed to influence the rate of flow after water enters the structure. Culverts and siphons are two examples of tubes or pipes used in spillway control systems.

- A culvert sets the maximum rate of flow by elevation, opening size, and slope.
- A siphon operates by creating a vacuum on the intake end.

Figure IV-17 shows culvert and siphon spillways.

FIGURE IV-17. TUBE CONTROL: CULVERT AND SIPHON

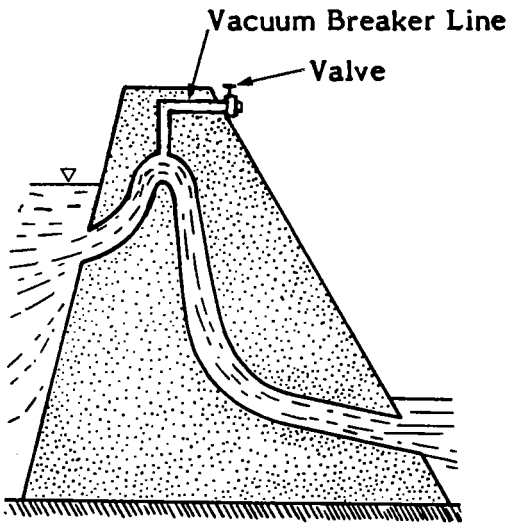

Siphon

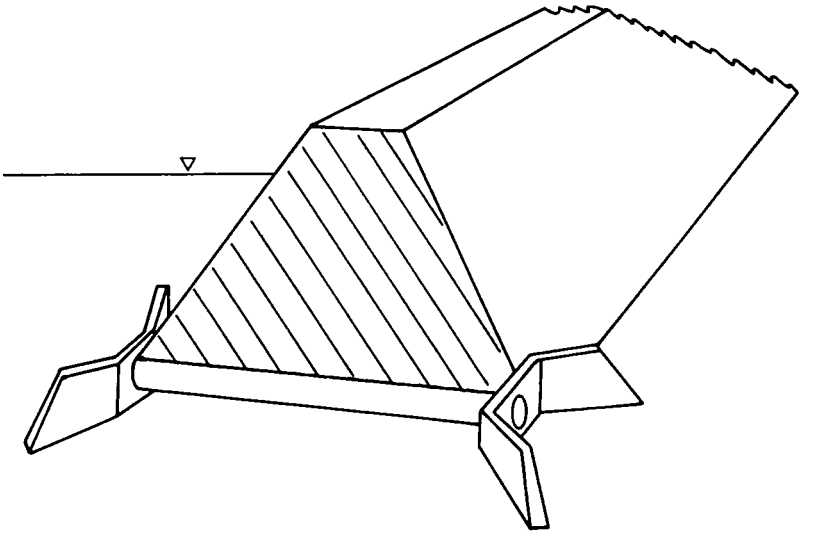

Culvert

IV. INSPECTING THE COMPONENTS: CONTROL SECTION

Gates

Gates operate mechanically to vary the parameters of control. Several types of gates are commonly used. Figure IV-18 shows some typical gates.

FIGURE IV-18. TYPICAL SPILLWAY GATES

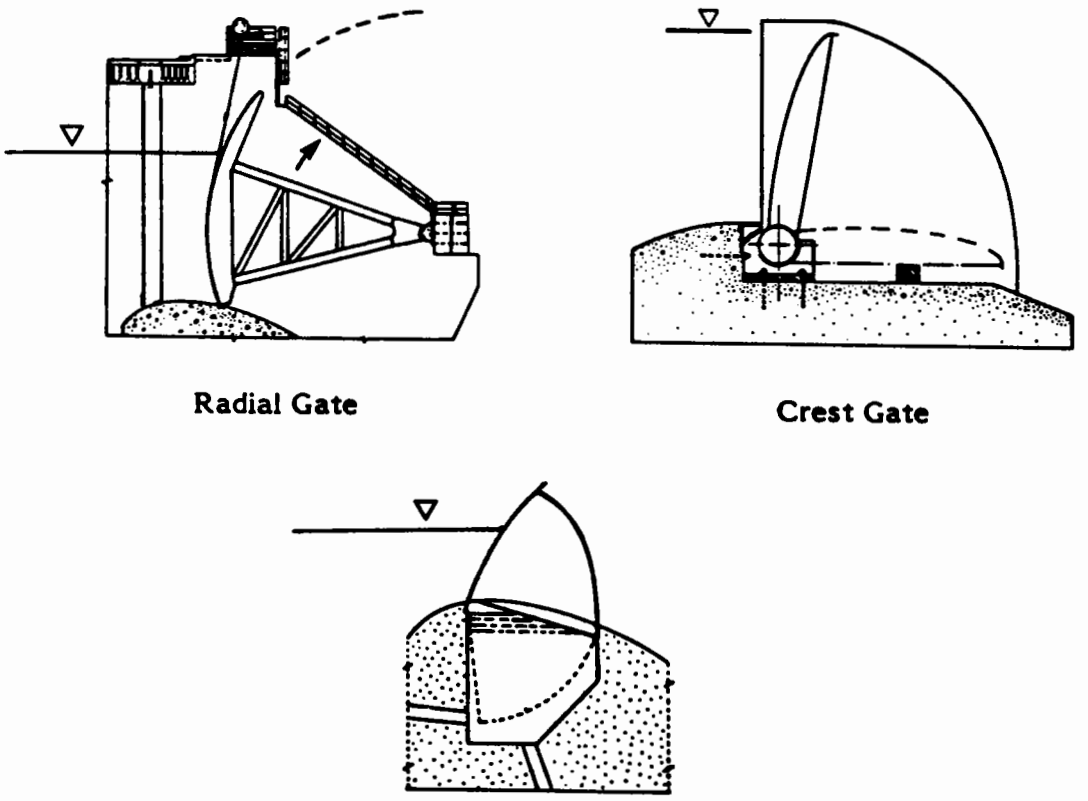

For more information on gates, see the module entitled Inspection And Testing Of Gates, Valves, And Other Mechanical Systems.

Stoplogs And Flashboards

Stoplogs and flashboards are installed and removed as needed to alter the crest elevation or channel width.

- Stoplogs are horizontal boards recessed into grooves in supporting piers.
- Flashboards are individual boards or panels supported by vertical pins or stanchions anchored to the crest. Some flashboards are designed to fail when the force of the water exceeds the strength of the stanchions.

Figure IV-19 contains drawings of stoplogs and flashboards.

FIGURE IV-19. STOPLOGS AND FLASHBOARDS

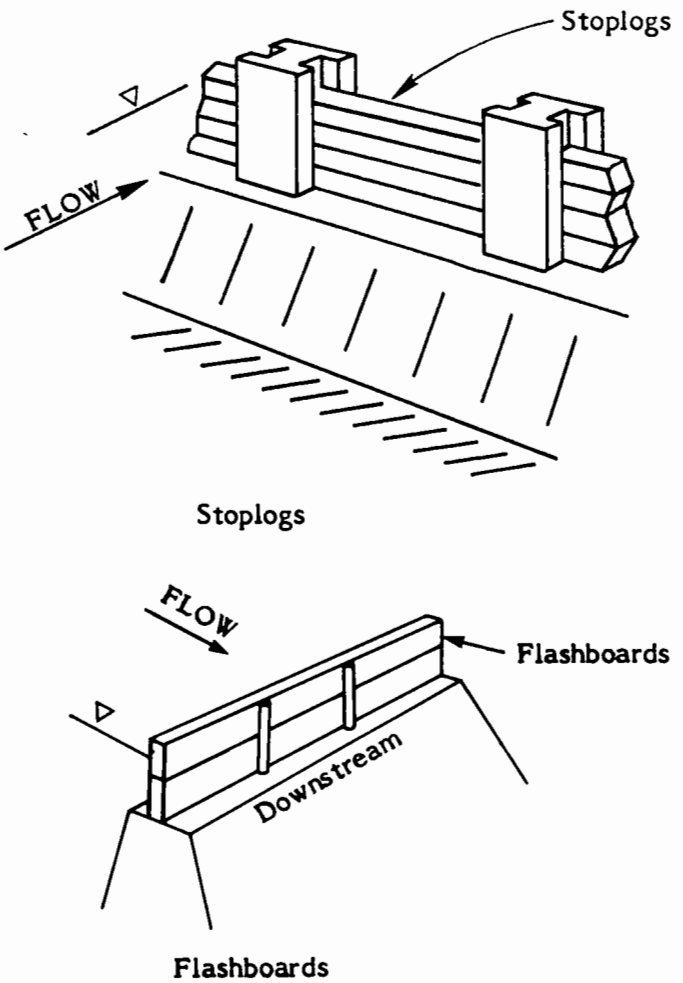

Ancillary Equipment

Ancillary equipment may be piers, decks, bridges, ladders, or other access devices needed to support, operate, or perform maintenance on gates, stoplogs, or flashboards. Figure IV-20 shows an equipment (or operating) bridge with a crane.

FIGURE IV-20. EQUIPMENT (OR OPERATING) BRIDGE

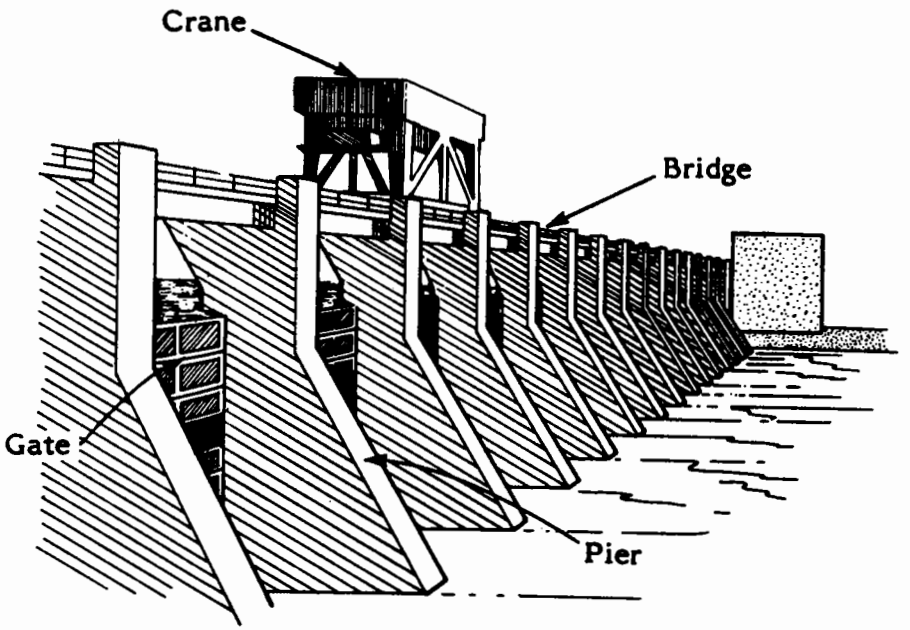

TYPICAL PROBLEMS WITH THE SPILLWAY CONTROL SECTION

The control section is a particularly critical portion of a spillway. The spillway **must** begin releasing water as intended by design, whether the flow is triggered when reservoir water reaches a predetermined level, or through the operation of gates or the removal/failure of stoplogs or flashboards. The most serious danger posed by the inability of the control section to operate properly is that the reservoir may rise and overtop the dam.

Problems typical to the spillway control section include:

- **Deterioration Of Surface Materials.** Check the following points for deterioration in the control section:

  ✓ Look at surfaces in areas of concentrated and high velocity flows, such as near gates, for erosion.

  ✓ Check areas near large gates for cracking in concrete, and tearing, rupture, and fatigue in metal.

  ✓ Examine the edges of orifices and upstream edges of weirs for damage from battering by ice or debris. A boat may be used to inspect the upstream side of a weir immediately adjacent to the reservoir.

☞ **INSPECTION TIP:** High velocity flows over a concrete surface containing abnormalities can initiate cavitation damage. Check surfaces carefully for offsets, small holes, and calcium carbonate deposits. The bearing surfaces where gates rest and areas immediately downstream of gate slots, liner plates, and air vents should be examined with special care.

- **Obstructions.** Besides general types of obstructions already discussed in this module, check for the following obstructions to control sections:

  ✓ Look for ice buildup at the crest, ice jams, and snow dams.

  ✓ See if wind-blown sediment is clogging air vents downstream from gates. (Air vents may be present if a conduit is located downstream of the control section.)

  ✓ Check for unauthorized equipment (such as flashboards) added to the control section.

Continued . . .

TYPICAL PROBLEMS WITH THE SPILLWAY CONTROL SECTION (Continued)

INSPECTION TIP: Be sure to check the flashboard material carefully. Flashboard stanchions or the flashboards themselves typically are designed or sized to fail when the pool level reaches some predetermined elevation. Any replacement or alteration of the stanchion or flashboard material may delay or eliminate the designed failure, resulting in overtopping of the dam due to decreased outflow capacity of the spillway.

- **Fuseplug Problems.** A fuseplug may be in place for many years before its intended failure in response to severe flooding. A number of problems can affect a fuseplug over time. When inspecting a fuseplug, check the following:

  ✓ Make sure the fuseplug is free of woody vegetation and debris. Some vegetation, such as grass, may be required by the design.

  ✓ Check for erosion and loss of embankment material that might cause the fuseplug to fail prematurely. Use a hand level to measure the freeboard for losses or increases, or recommend a survey, to make sure that fuseplug dimensions conform to the design reflected in previous inspection reports and construction drawings. A "pilot channel" (notch) may be created in a fuseplug to facilitate failure. Such channels usually are not shown in specifications or drawings, but are not deficiencies.

  ✓ Look for alterations such as paving or unauthorized structures.

- **Operating Bridge And Pier Problems.** Deficiencies in the operating bridge, piers, decks, or other access structures on the spillway could make gates and other controls unworkable in an emergency, and collapse of the supporting structure could obstruct the spillway.

  Check for the same deficiencies listed earlier in this unit for the access bridge to the intake structure.

- **Problems With Gates, Stoplogs, And Flashboards.** The module Inspection And Testing Of Gates, Valves, And Other Mechanical Systems provides detailed information about gate and valve problems. When inspecting the control section of a spillway, your primary concern is to ensure that the operation of gates and other reservoir evacuation equipment is not impaired by adjacent and supporting structures.

Continued . . .

TYPICAL PROBLEMS WITH THE SPILLWAY CONTROL SECTION (Continued)

When inspecting stoplogs, flashboards, and structures adjacent to and supporting gates and valves, check the following points:

- ✓ Look for displacement of structural elements or concrete deterioration that may be jamming or misaligning gates. Have the equipment operated, if possible, to detect jamming, or gates not seated properly on the crest. During operation, look for deterioration of material on the underside of the gates.
- ✓ On timber stoplogs, check for rotting and other deterioration.
- ✓ Note excessive leakage.
- ✓ Watch for bending of flashboards, misalignment of gate stems, and other signs of strain from holding water, or from debris, ice, or overtightening.

- **Backfill And Foundation Deficiencies.** Points to remember when inspecting the control section for backfill and foundation deficiencies are:
  - ✓ Foundations in the control section often must bear the stress of heavy equipment. Check carefully for displacements that may indicate settling, foundation shifts, or undermining. Check for voids under concrete channel walls and floors.
  - ✓ It is critical that gaps in joints do not expose foundation or backfill material where the spillway extends through the embankment section, and that waterstops, sealants, and compressive joint fillers are intact and in good condition.
  - ✓ Check for clogged weepholes and foundation drains if present, and watch for seepage and other signs of problems with the drainage system.

WHAT IS THE OUTLET WORKS GATE OR VALVE HOUSING?

Some small, privately owned dams have no provision for controlled release of the impounded water. However, the outlet works of most dams are designed with controls (regulating devices) consisting of one or more gates or valves. The structure that supports or encases each of these controlling mechanisms can be referred to as the gate or valve housing. This section deals with how to inspect a gate or valve housing, and the transitions upstream and downstream of the housing.

Continued . . .

WHAT IS THE OUTLET WORKS GATE OR VALVE HOUSING? (Continued)

The condition of the gate or valve housing may be critical to maintaining a gate or valve in a workable fashion and providing a safe environment for operating it during emergencies. The structural integrity of the enclosure and the condition of the access are important considerations during a dam safety inspection.

Gate or valve housings may be located at various points along outlet works conduits. Location determines many of your inspection concerns.

- An upstream gate or valve is located at the upstream end of the conduit, and may be part of the intake structure. The upstream control housing can suffer many of the same effects of ice damage and weathering stress as the intake structure (from repeated wetting and drying, and freezing and thawing). If trashracks are inadequate, debris may get into the gate or valve and damage the mechanism or its housing--possibly jamming it open or shut.

- A midstream gate or valve is located somewhere along the length of the conduit (inside or beneath the dam). Access via a gallery, adit, tunnel, or shaft is normally required. The enclosure structure (sometimes referred to as the "gate chamber") should be inspected for structural stability, access conditions, dryness, and safe operating conditions such as adequate ladders and railings, lighting, and ventilation. Also important are provisions for communications during emergencies.

- A gate or valve at the downstream end of a conduit is subject to icing.

TYPICAL PROBLEMS IN THE GATE OR VALVE HOUSING AREA

Upstream Transition Problems

The waterway immediately upstream of the gate or valve housing is called the upstream transition. Examine this area carefully, particularly the following items:

✓ Check near all discontinuities for:

- Cracks or displacement at joints
- Erosion or cavitation damage
- Loose or missing steel liner plates, gate guides, or seal plates
- Exposed reinforcing steel

✓ Check the structural integrity of the concrete (or other piping material used) for evidence of stress, such as cracks or deformed shapes.

✓ Look for debris that may obstruct gates.

Gate Or Valve Housing Problems

Check the gate or valve housing and any encasement concrete around the gate or valve. Look for:

- ✓ Damaged welds
- ✓ Cracks or discontinuities between the housing and the conduit
- ✓ Loose gate guides
- ✓ Misalignments or displacement
- ✓ Erosion or cavitation of the flow surface
- ✓ Ice damage (if surfaces are exposed)

Downstream Transition Problems

The area where the gate or valve meets the conduit or outlet structure downstream is called the downstream transition. At the downstream transition, the shape of the waterway changes from the shape of the gate (usually rectangular) or valve to the shape of the downstream waterway. A portion of the transition may be steel-lined if the velocity beneath the regulating gate or valve is great enough to cause erosion of concrete.

Where there is more than one upstream conduit and gate or valve, at the gate or valve housing the multiple water passages may converge into a single conduit. At the downstream end of piers that separate multiple control gates, extreme turbulence and negative pressure can be created. These pressures can damage the walls and ceiling of the transition area and create discontinuities where the transition liner meets the conduit.

- ✓ As with the upstream transition, check near all discontinuities for:
  - Cracks or displacement at joints
  - Erosion or cavitation damage
  - Loose or missing steel liner plates, gate guides, or seal plates
  - Exposed reinforcing steel
- ✓ Check that the liner is soundly bonded to the concrete casing. Bang with a hammer or use sonic instruments to determine whether there may be voids in the concrete behind the liner.
- ✓ Use metal thickness-measuring devices, if available, to check the thickness of the liner.

In your report, you should detail any findings about the gate or valve housing using the "SMPL" system. Deficiencies must be repaired, although an experienced and qualified engineer may have to determine the severity of the problems and the extent to which repairs are required at the present time.

IV. INSPECTING THE COMPONENTS: EXERCISE

INSTRUCTIONS: Use the information presented in this section of the unit to answer the following questions. When you have completed all of the questions, check your answer against those presented in the answer key. The answer key can be found immediately following this exercise.

1. Draw each weir length configuration above the name of that configuration. Also draw arrows to show the direction of flow.

a. Straight Weir

b. Semi-Circular Weir

c. Box Weir

Continued . . .

IV. INSPECTING THE COMPONENTS: EXERCISE

2. In the space below, draw the shape of an ogee crest, and an arrow to show the direction of flow.

3. In which case is ice damage to an outlet works control device most likely?

   ☐ Upstream control device

   ☐ Midstream control device

IV. INSPECTING THE COMPONENTS: EXERCISE — ANSWER KEY

INSTRUCTIONS: Compare your answers to those given below to see how well you learned the information presented in this section of the unit.

1. Draw each weir length configuration above the name of that configuration. Also draw arrows to show the direction of flow.

a. Straight Weir

b. Semi-Circular Weir

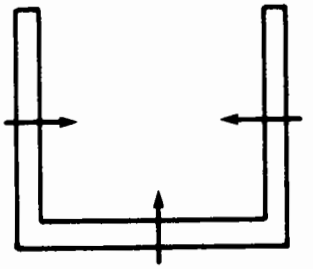

c. Box Weir

Continued . . .

IV. INSPECTING THE COMPONENTS: EXERCISE -- ANSWER KEY

2. In the space below, draw the shape of an ogee crest, and an arrow to show the direction of flow.

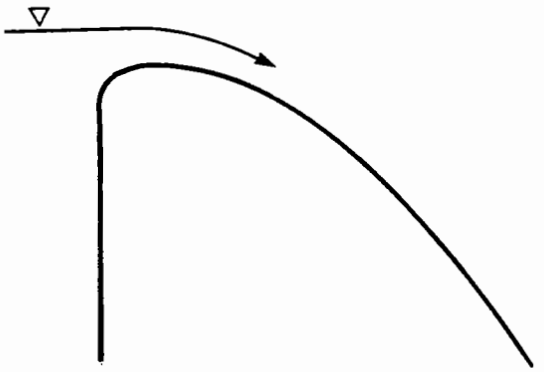

3. In which case is ice damage to an outlet works control device most likely?

   ☑ **Upstream control device**

   ☐ Midstream control device

   An upstream control device is often part of an intake structure, and may be damaged when the reservoir freezes and thaws. A midstream control device is separated from the reservoir by the upstream conduit, so that ice damage would be less likely.

IV. INSPECTING THE COMPONENTS: VIDEO SEGMENT #1

VIDEO PRESENTATION

At this point you should watch the first video presentation, on inspecting entrance channels, intake structures, and control sections. To watch the video presentation . . .

- Turn on your video player.
- Load the videocassette.
- Watch video segment #1.

After watching video segment #1, return to the next section of this unit on water conveyances. Do not rewind the videocassette.

WHAT IS THE DISCHARGE CHANNEL?

The discharge channel, if present, conveys flow from the control section to the energy dissipation section, return channel, or natural stream. The discharge channel should accommodate the entire range of flows from the control section to prevent the integrity of the dam structure from being jeopardized.

Like entrance channels, discharge channels can be lined or unlined. Channel linings may be constructed of:

- Concrete
- Asphaltic concrete
- Soil cement, RCC, and shotcrete
- Riprap
- Gabions

Figure IV-21 shows one common type of discharge channel: a side channel spillway with the discharge channel perpendicular to the overflow crest.

FIGURE IV-21. SIDE CHANNEL CONTROL AND DISCHARGE CHANNEL

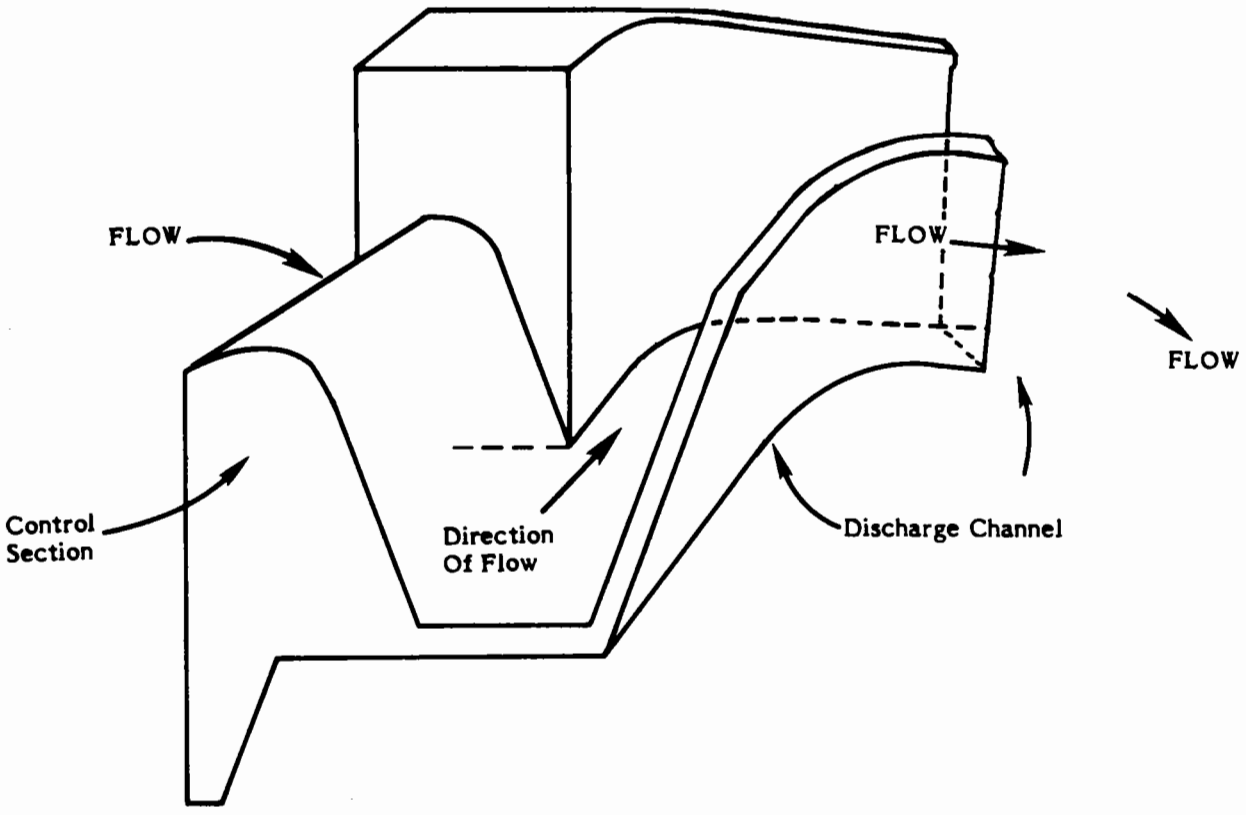

Elements Of The Discharge Channel

Each type of discharge channel consists of different elements.

- An unlined channel contains:

  - Side slopes or walls
  - Floor

- A lined channel has side slopes or walls and a floor, each consisting of:

  - Foundation material
  - Lining

  Concrete linings may also contain the following elements:

  - Weepholes, pipes, or other means of drainage
  - Joints between sections
  - Joint sealants, compressible joint filler, and waterstops
  - Reinforcing steel
  - Baffles or other energy dissipators

Drainage or inspection galleries may be located within a concrete spillway with an open discharge channel. Composite dams feature a concrete spillway gravity section with embankment wings. Galleries in such a dam are part of the spillway structure. The TADS module Inspection Of Concrete And Masonry Dams describes the inspection of galleries.

Typical Problems With The Discharge Channel

A discharge channel often is subject to high velocity flows, so that damage can develop rapidly. If the discharge channel fails:

- The spillway may not safely pass sufficient water to keep the reservoir at safe levels.

- Flood water can erode foundations and areas adjacent to the failed structure, endangering the dam.

Problems typical to the discharge channel include:

- **Deterioration Of Surface Materials.** Cavitation is a problem likely to affect the discharge channel. Many discharge channels are set at relatively steep angles, and are liable to be exposed to high velocity flows.

Continued . . .

Typical Problems With The Discharge Channel (Continued)

☞ **INSPECTION TIP:** Offsets, joints, depressions, calcium carbonate deposits, and other irregularities on the flow surface of the discharge channel should be carefully recorded, and nearby areas should be inspected for evidence of cavitation damage.

- **Obstructions.** Check discharge channels for:

  ✓ Uncontrolled vegetation
  ✓ Rocks or material from a slope failure
  ✓ Debris caught on chute baffles

- **Slope And Wall Failure.** Follow the same inspection steps as when examining slopes and walls in the entrance channel.

- **Poor Floor Condition Or Stability.** Follow the same inspection steps as when examining floors in the entrance channel.

- **Defective Joints.** Examine joints in discharge channel for:

  ✓ Separation and exposure of foundation material
  ✓ Damaged or missing waterstops
  ✓ Hardened or missing sealants or compressive joint fillers
  ✓ Infiltration and exfiltration of water
  ✓ Soil loss out of opened joints
  ✓ Offsets at joints
  ✓ Spalling caused by offsets

- **Backfill And Foundation Deficiencies.** High velocity flows passing through the discharge channel can erode unlined channels, or, in lined channels, can displace channel floors or walls and then erode backfill and foundation material.

  ✓ On embankment dams, examine areas adjacent to discharge channels that pass high velocity flows for erosion by water overflowing the channel walls.

  ✓ Check for displacements that may indicate settling, foundation shifts, or undermining.

  ✓ Look for voids under concrete channel walls and floors, and gaps where lined channel walls meet backfill.

  ✓ Check for clogged weepholes and drains, and watch for seepage and other signs of problems with the drainage system.

IV. INSPECTING THE COMPONENTS: WATER CONVEYANCE

WHAT ARE CONDUITS AND TUNNELS?

Conduits and tunnels are enclosed waterways that convey reservoir water through or around a dam.

A conduit is a pipe or box structure constructed by joining sections of pipe or conduit. A conduit can be constructed in an excavated trench, inside a tunnel, on the ground surface, or on supports above the ground. All outlet works waterways are conduits. Figure IV-22 shows a cutaway view of a typical conduit through an embankment dam, and Figure IV-23 shows a conduit through a concrete dam.

FIGURE IV-22. CONDUIT THROUGH AN EMBANKMENT DAM

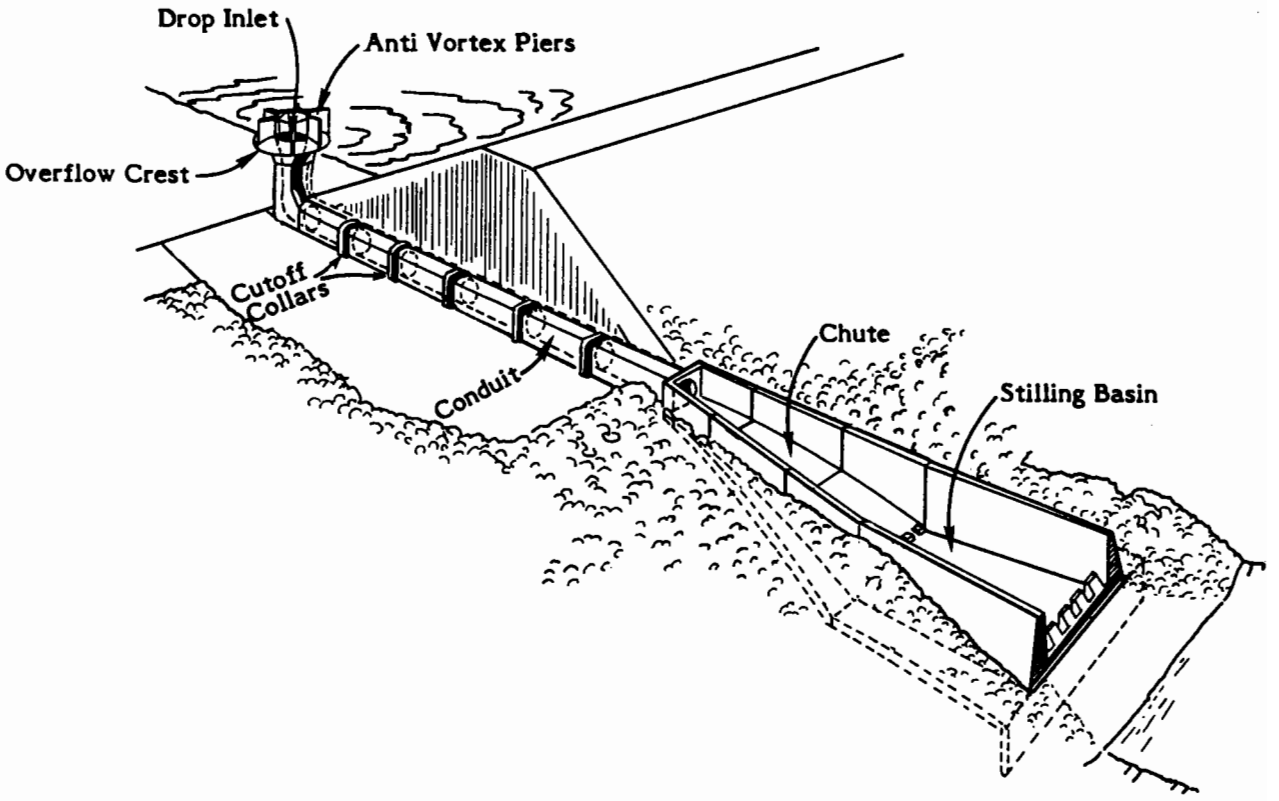

Continued . . .

WHAT ARE CONDUITS AND TUNNELS? (Continued)

FIGURE IV-23. CONDUIT THROUGH A CONCRETE DAM

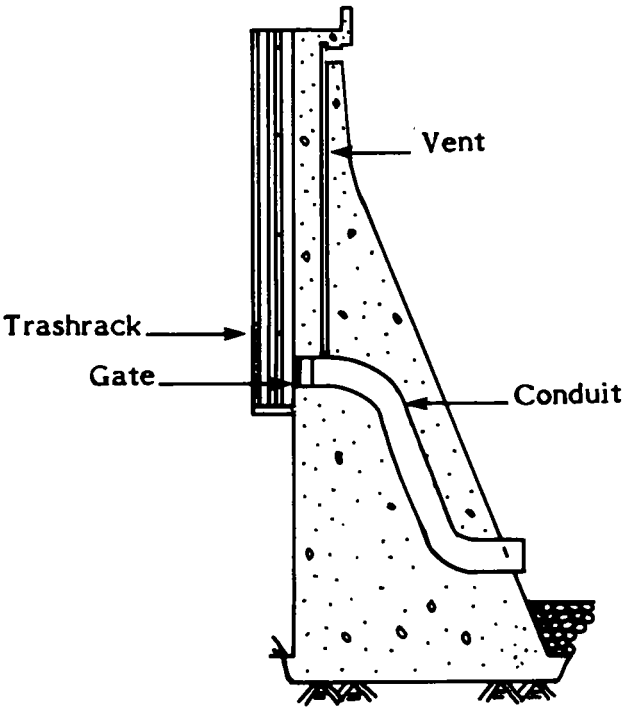

A specialized type of conduit, the penstock, delivers reservoir water under pressure to a turbine for hydroelectric power generation.

Continued . . .

WHAT ARE CONDUITS AND TUNNELS? (Continued)

A tunnel is excavated through in situ material, usually from the dam, and may be lined with cast-in-place concrete, precast segments, or occasionally a steel liner. Some rock tunnels are unlined. Figure IV-24 shows the features of a tunnel spillway.

FIGURE IV-24. TUNNEL SPILLWAY

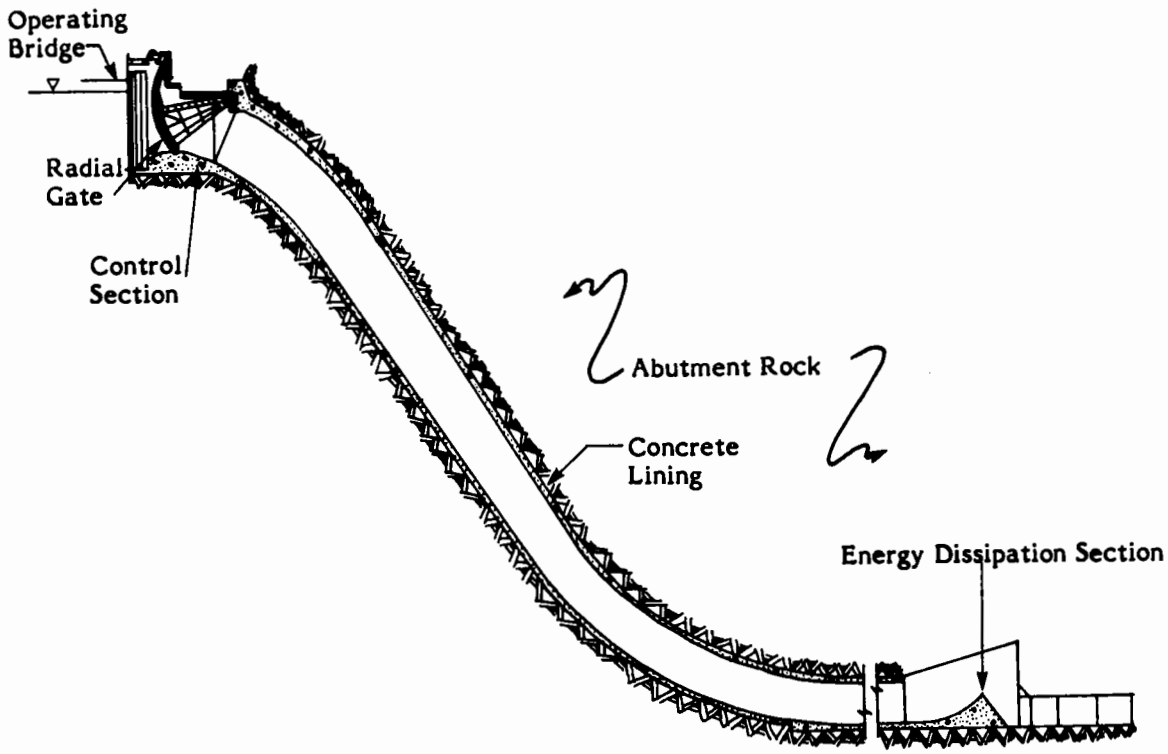

IV. INSPECTING THE COMPONENTS: WATER CONVEYANCE

Conduits

Conduits can range from simple, bare CMP pipe placed through an embankment dam to sophisticated water conveyance systems that carry pressurized water. The components of a conduit are likewise varied. The following list is not comprehensive but gives an idea of some of the components and materials that make up the conduit of a dam.

- Pipe material: asbestos cement, cast iron, cast-in-place or precast reinforced concrete, corrugated metal, ductile iron, polyethylene, polyvinyl chloride, steel, vitrified clay, or wood stave.
- Lining for pressurized pipe: asphaltic concrete, coal-tar enamel, mortar, plastic, or rubber.
- Control or contraction joints sealed with waterstops, seals, or gaskets.
- Cutoff or seepage collars that encircle the conduit to lengthen the seepage path.
- Joint supports and collars used to prevent settlement and opening of the joints.
- Filtered drainage blanket: graded granular material that aids in drawing seepage away from the conduit, usually placed around the downstream part of the conduit.
- Bedding for the conduit: natural rock, concrete, or compacted foundation material that provides structural support.
- Outlet support for the conduit (discussed in the final section of this unit).

Implications Of Outlet Works Gate Or Valve Location

The placement of a gate or valve at the midpoint or downstream end of the outlet works influences the types of conduit problems that are typically encountered, and the urgency of remedial action.

- **Midstream Gate or Valve**

  With a midstream gate or valve, the upstream section of conduit is under reservoir head and is subject to significant amounts of stress.

- **Downstream Gate Or Valve**

  If the control gate or valve is at the downstream end of the waterway, there is a section of pressurized conduit upstream of the device. All conduit upstream of a gate or valve is under pressure of the existing reservoir head at the time of the inspection.

External Inspection Procedures For Conduits

Evidence of potential conduit problems may be found by examining external features of the conduit (if it is exposed) or the embankment. (Many of the embankment inspection procedures included here also have been discussed in the modules on inspecting embankment and concrete dams.)

✓ If the material is reaching its life expectancy, it may be possible to dig down to expose all sides of the conduit at a point where the surrounding soil is still damp. Examine the outside of the conduit for signs of deterioration. The condition of the outside of the conduit could be significantly different from the interior. In some cases, the soil protects the exterior from oxygen-induced corrosion. On the other hand, local site conditions may have accelerated the deterioration of the exterior. Consider the outside of the conduit to be just one indicator.

✓ Look for signs of infiltration of soil into the conduit:

- Depression of the embankment along the centerline of the conduit.
- Sinkholes and piping cavities that exit the surface. Holes taken over by animals may not be easily recognized as sinkholes or piping cavities.
- Holes that appear to be in a line. These may be an indication that piping or settlement is occurring.
- Fines in the discharged water.

✓ Look for seepage or indications that seepage is sometimes present. (This is best done while the conduit is full.) Indications of seepage are:

- Wet spots
- Increased vegetation, or the presence of plants that thrive in wet ground

✓ Watch for water flow when all intakes are closed. If any is observed, doublecheck to see if intakes are leaking. If not, document where water is entering the waterway, and examine the water for fines.

✓ Look for piping-related erosion around the conduit near the downstream end. Check the embankment slope above the conduit outfall carefully for voids or erosion that may indicate piping. Check for seepage adjacent to the structure. The situation may be especially serious if the seepage is carrying sediment.

✓ With exposed conduit, check the supports for settlement or movement of the joints.

✓ Check the concrete anchors of exposed steel conduit for cracking, weathering, and/or chemical deterioration.

Internal Inspection Procedures For Conduits

In attempting to inspect conduit interiors, you may experience the following difficulties:

- **Dewatering difficulties** - You cannot inspect a conduit comprehensively unless it has been dewatered. However, dewatering may be impractical or impossible for one or more of the following reasons:

  - Lack of a bulkhead or other closure device
  - The need to limit maximum reservoir drawdown
  - The need to maintain water flows
  - Structural inadequacy of the conduit to withstand hydrostatic pressures in a dewatered condition

  To assess the probable condition of the conduit interior, it may be necessary to rely on results of the exterior inspection.

- **Inaccessibility of the conduit interior** - The conduit may be too small or too dangerous for internal inspection by a person. One possibility is to use remotely operated video equipment. If that is not feasible, the inspection must be based on:

  - The condition of the exposed portion of the conduit or the embankment above it.
  - The internal inspection of accessible portions of the conduit. (Some details can be observed from the downstream end of the conduit with the aid of a strong light and possibly a mirror.)

☞ **INSPECTION TIP:** One indication of settlement-related problems that may be observed from the downstream end of a conduit is the ponding of water in certain reaches of pipe.

A deficiency commonly encountered in the internal inspection of conduits is **cracking**. Be aware of previously reported cracks and note any new cracks, using a crack map or similar reporting method preferred by your organization. Figure IV-25 shows one page of a crack map prepared by an inspection team. Cracks should be documented as fully as possible, with measurements and/or sketches drawn to scale showing the length and position of each crack. The crack map in Figure IV-25 includes measurements of the depth of weepholes, which were probed during the inspection.

Continued . . .

Internal Inspection Procedures For Conduits (Continued)

FIGURE IV-25. CRACK MAP

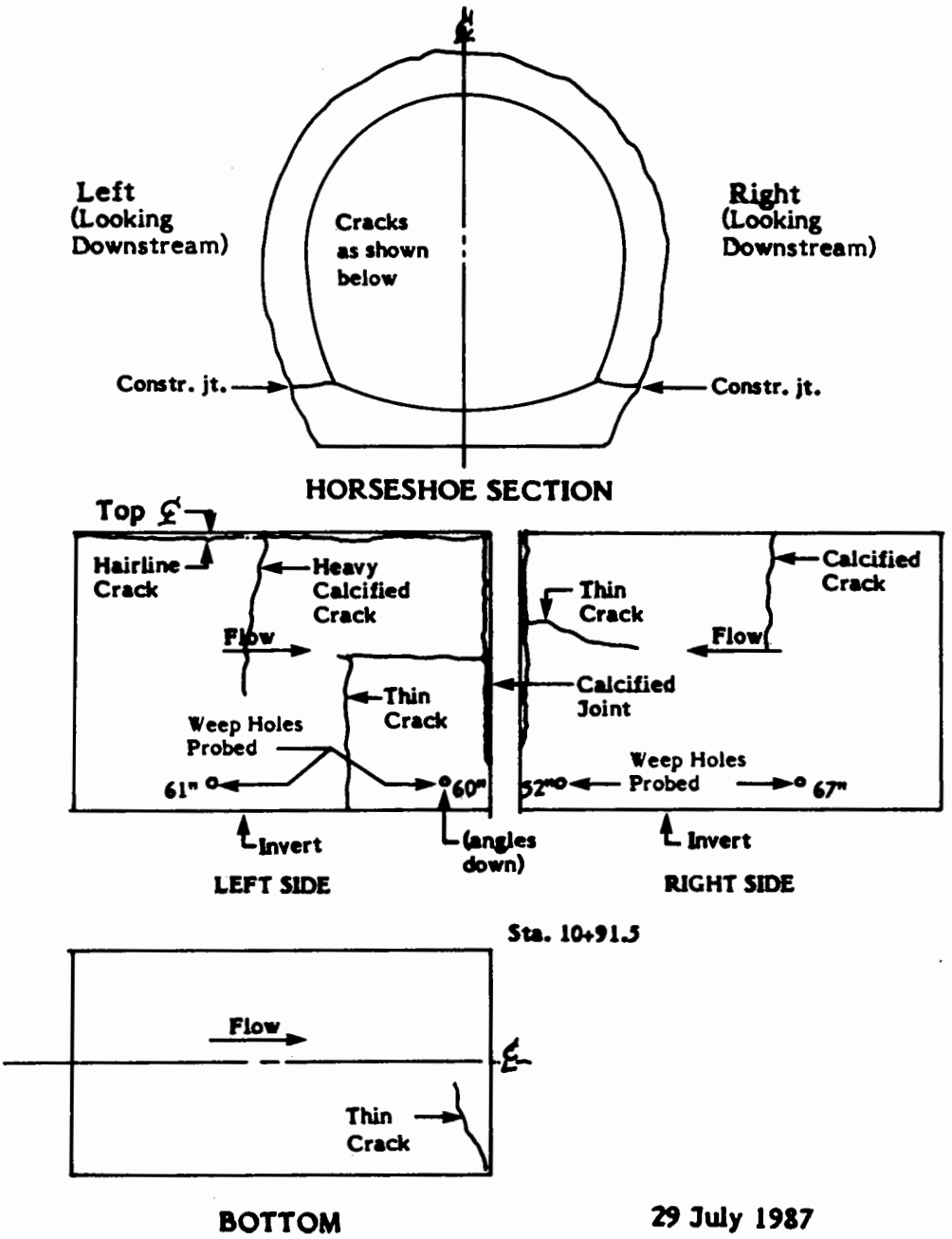

Continued . . .

Internal Inspection Procedures For Conduits (Continued)

To get some indication of whether cracks are continuous through a concrete structure, use a geologist's pick or other hammer to tap the concrete, listening for changes of pitch that gives clues as to the condition of the concrete. More comprehensive studies of the concrete using dye tests and sonic methods may be necessary if there are indications that the crack extends any distance into the structure.

When inspecting the interior of a conduit, document the following:

- ✓ Cavitation damage downstream from gates and valves, and at sharp bends, joints, or other discontinuities.
- ✓ Corrosion of metal conduit or liner.
- ✓ Cracking: Use crack maps. Describe position, length, and orientation (transverse, longitudinal, or diagonal). Estimate the depth of the crack.
- ✓ Damaged coating or lining materials. (Cracking or buckling is a sign of structural stress. Missing chunks can cause cavitation.)
- ✓ Debris impact.
- ✓ Deformation of the conduit shape.
- ✓ Efflorescence or gel on the concrete. (Indicates possible chemical deterioration of the concrete.)
- ✓ Erosion, especially in areas of high-velocity flow.
- ✓ Joint separation, compression, or deterioration. Mention any unsound welds, rivets, or flanges.
- ✓ Leakage from the conduit, or seepage entering the conduit.
- ✓ Misalignment of sections of the conduit.
- ✓ Plugged drain holes.
- ✓ Voids behind the conduit near any observed cracks, misalignments, or other areas of possible seepage.

Continued . . .

Internal Inspection Procedures For Conduits (Continued)

Problems with conduits occur most often at **joints,** and special attention should be given to them during inspection. Open joints can permit erosion of envelope material or cause leakage of water into the embankment during pressure flow. Joints in conduits should be inspected in dry conditions, if possible. Inspection just after a conduit is dewatered may reveal the locations of leaks, because water sometimes spurts through affected joints.

Typically, conduit joints pull apart under the highest part of a dam and are under compression at the ends of the waterway. When inspecting conduit joints, be sure to:

- ✓ Examine joints for leaks.
- ✓ Examine the joints between adjacent sections of conduit for leaks and for ruptured waterstops.
- ✓ Look for compression spalling of concrete.
- ✓ Check for misalignment of sections due to differential settlement.

Figure IV-26 shows a conduit joint which has opened along the bottom due to localized settlement along the conduit.

FIGURE IV-26. OPENED CONDUIT JOINT

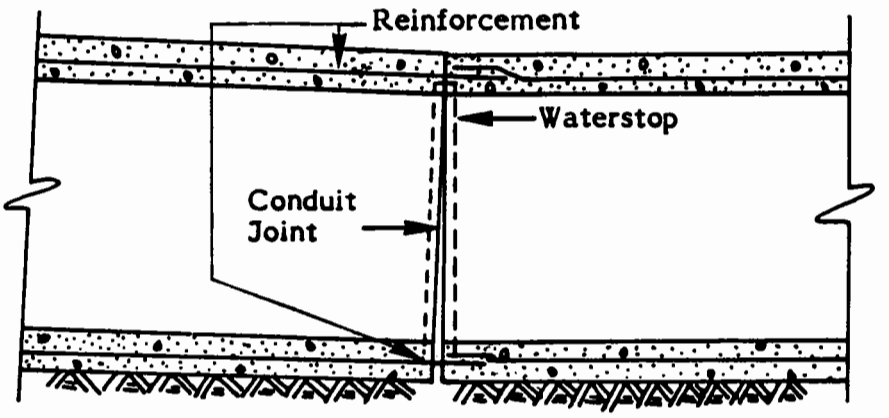

Joint Separation

Continued . . .

Internal Inspection Procedures For Conduits (Continued)

Figure IV-27 shows concrete penstock supports that have been severely cracked.

FIGURE IV-27. CRACKED PENSTOCK SUPPORTS

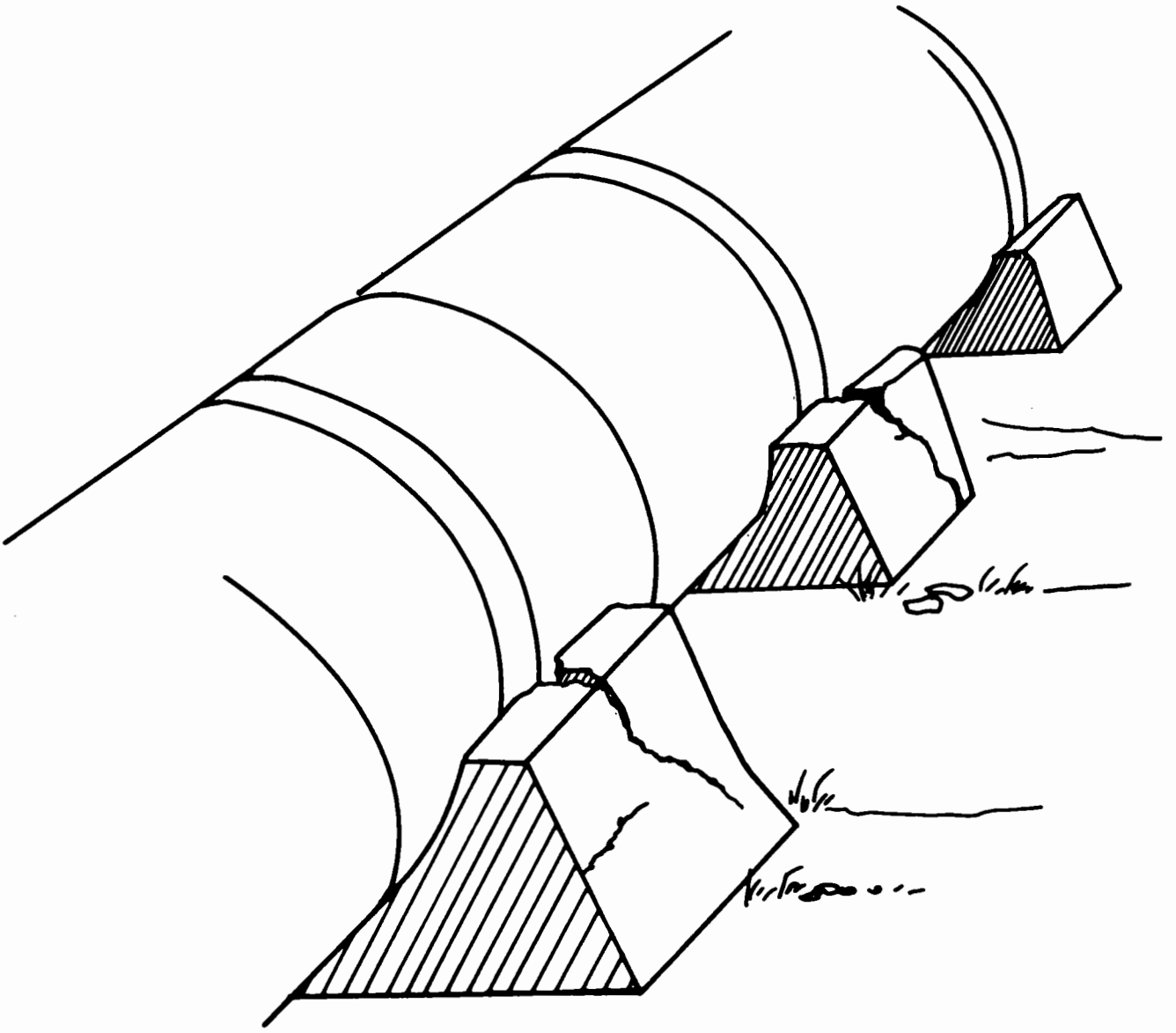

Tunnels

A tunnel may be lined with various materials or excavated through rock and left unlined. Problems with lined tunnels are similar to problems with conduit, since the lining material forms a conduit within the tunnel.

When inspecting an unlined rock tunnel, look for the following deficiencies:

- ✓ Fallen rock blocking or obstructing the tunnel.
- ✓ Deterioration of rock at seams.

IV. INSPECTING THE COMPONENTS: VIDEO SEGMENT #2

VIDEO PRESENTATION

At this point you should watch the second video presentation, on inspecting water conveyances. To watch the video presentation . . .

- Turn on your video player.
- Load the videocassette, if it is not in the player.
- Advance the tape to video segment #2, if the tape has been rewound.
- Watch video segment #2.

After watching video segment #2, return to the next section of this unit on energy dissipators. Do not rewind the videocassette.

IV. INSPECTING THE COMPONENTS: ENERGY DISSIPATION SECTION

WHAT IS THE ENERGY DISSIPATION SECTION?

The role of the energy dissipation section of a spillway or outlet works is to reduce and direct the energy and velocity of the flowing water. Energy reduction is especially necessary when flows enter an unlined channel, natural streambed, or river. Various energy dissipating structures can be used in combination.

The energy dissipation section of a spillway or outlet works should protect the toe of the structure and the embankment groin and toe from erosion and undermining, as well as protect the adjacent embankment from currents and eddies in tailwater during high discharges.

ENERGY DISSIPATION STRUCTURES

In this module, we will look at the following energy dissipation structures individually: baffles, steps, flip bucket, stilling/hydraulic jump basin, control valve, impact basin, stilling well, plunge pool, and apron.

Baffles

Baffles are series of upright obstructions that slow the water flow. They are usually constructed of concrete, though boulders embedded in the channel floor sometimes serve as baffles. Figure IV-28 shows a side view of concrete baffles with reinforcing, both on a level apron and a sloped apron.

FIGURE IV-28. BAFFLES

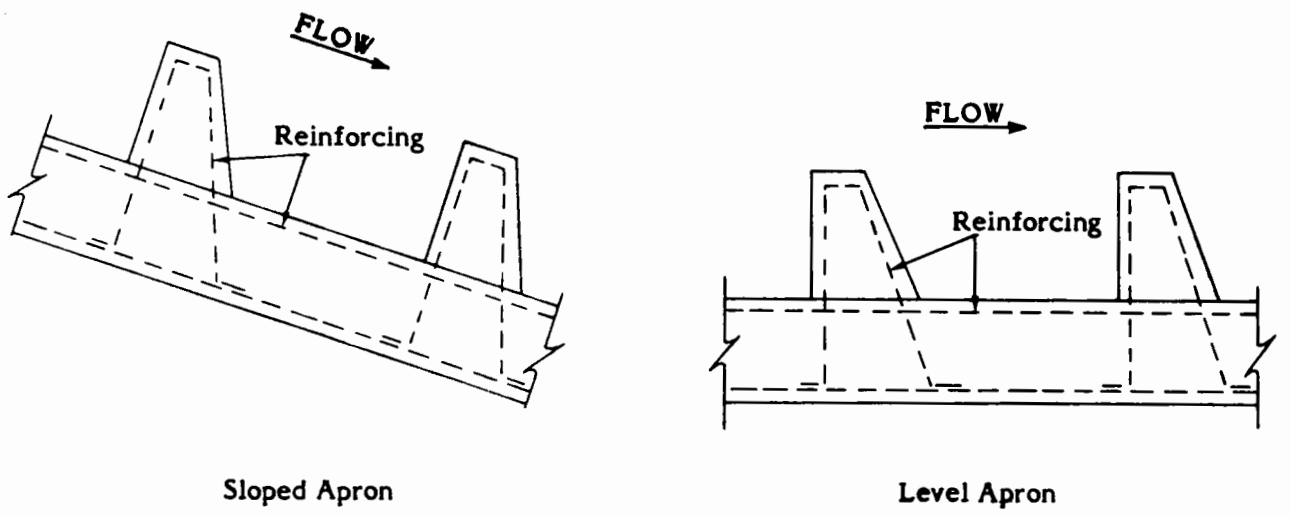

Continued . . .

Baffles (Continued)

A **baffled apron drop** consists of an array of barriers set on the channel floor to dissipate the energy of the flow as it drops through the channel. Figure IV-29 illustrates a baffled apron drop.

FIGURE IV-29. BAFFLED APRON DROP

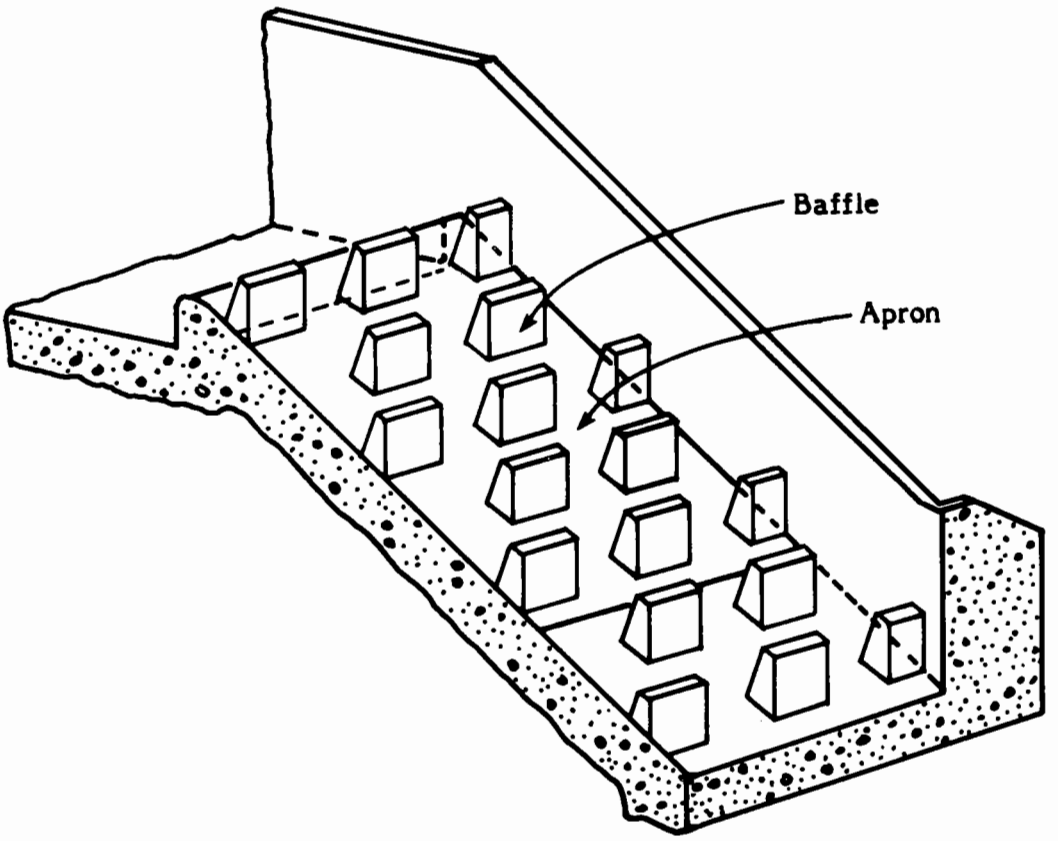

This structure combines the water conveyance and energy dissipation functions by both conveying flows from the control section and dissipating energy.

Steps

The entire discharge channel may consist of a series of steps, or the energy dissipation section may be stepped to reduce water energy. Figure IV-30 shows a sectional view of a stepped chute.

FIGURE IV-30. STEPS

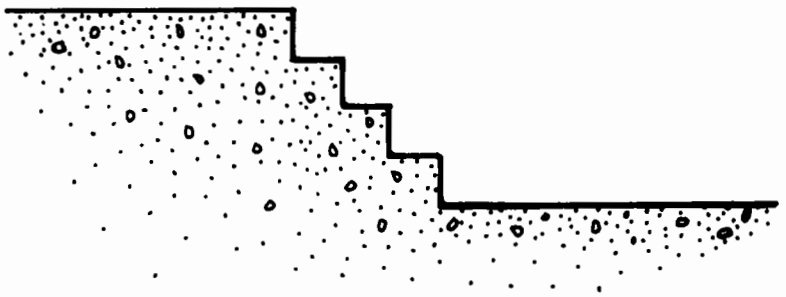

Flip Bucket

A flip bucket is an upturned structure at the end of a chute that changes and directs the flow by flipping water up into the air and toward a plunge pool. A flip bucket is often used when water depth does not permit a hydraulic jump to form. Flip buckets below the water surface or slotted flip buckets are sometimes referred to as **roller buckets.** A cutoff wall is used under a flip bucket or other terminal structure to prevent undercutting by erosion. Steel sheet piles, concrete, or (in rare cases) timbers are used to construct cutoff walls.

Figure IV-31 illustrates the structure of a flip bucket and shows two types of flip buckets.

FIGURE IV-31. FLIP BUCKET

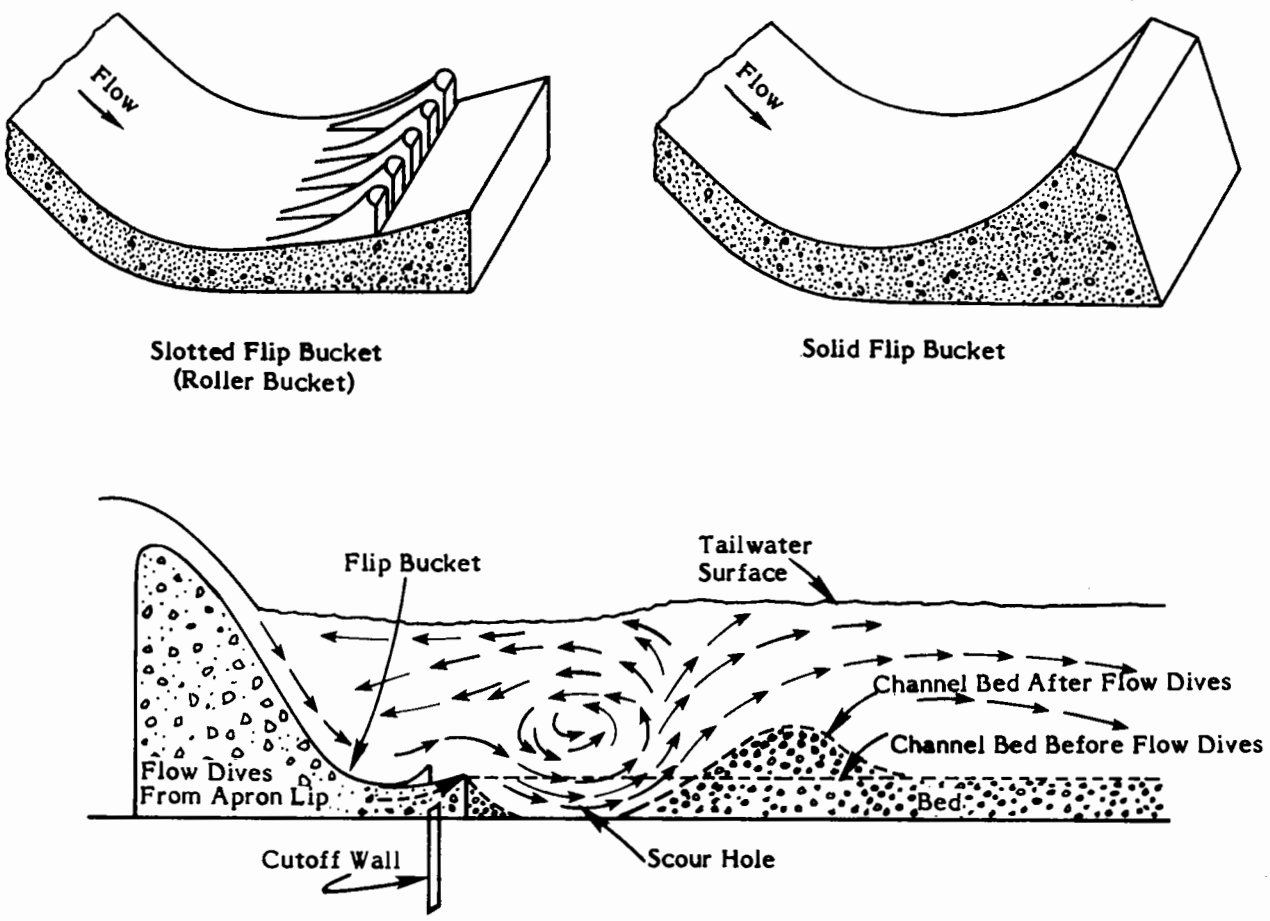

Stilling/Hydraulic Jump Basin

A stilling/hydraulic jump basin is a channel structure that dissipates the high kinetic energy of flows. A stilling/hydraulic jump basin often has one or more rows of barriers, such as chute blocks (positioned where the chute meets the basin floor), baffles (also known as baffle piers or floor blocks), and dentates (tooth-like sill configurations). The geometry of the structure usually forces a standing wave, characterized by eddies, air entrainment, flow deceleration, and an increase in flow depth. A stilling/hydraulic jump basin is often lined with concrete or riprap.

Continued . . .

Stilling/Hydraulic Jump Basin (Continued)

Figure IV-32 shows details of a stilling/hydraulic jump basin.

FIGURE IV-32. STILLING/HYDRAULIC JUMP BASIN

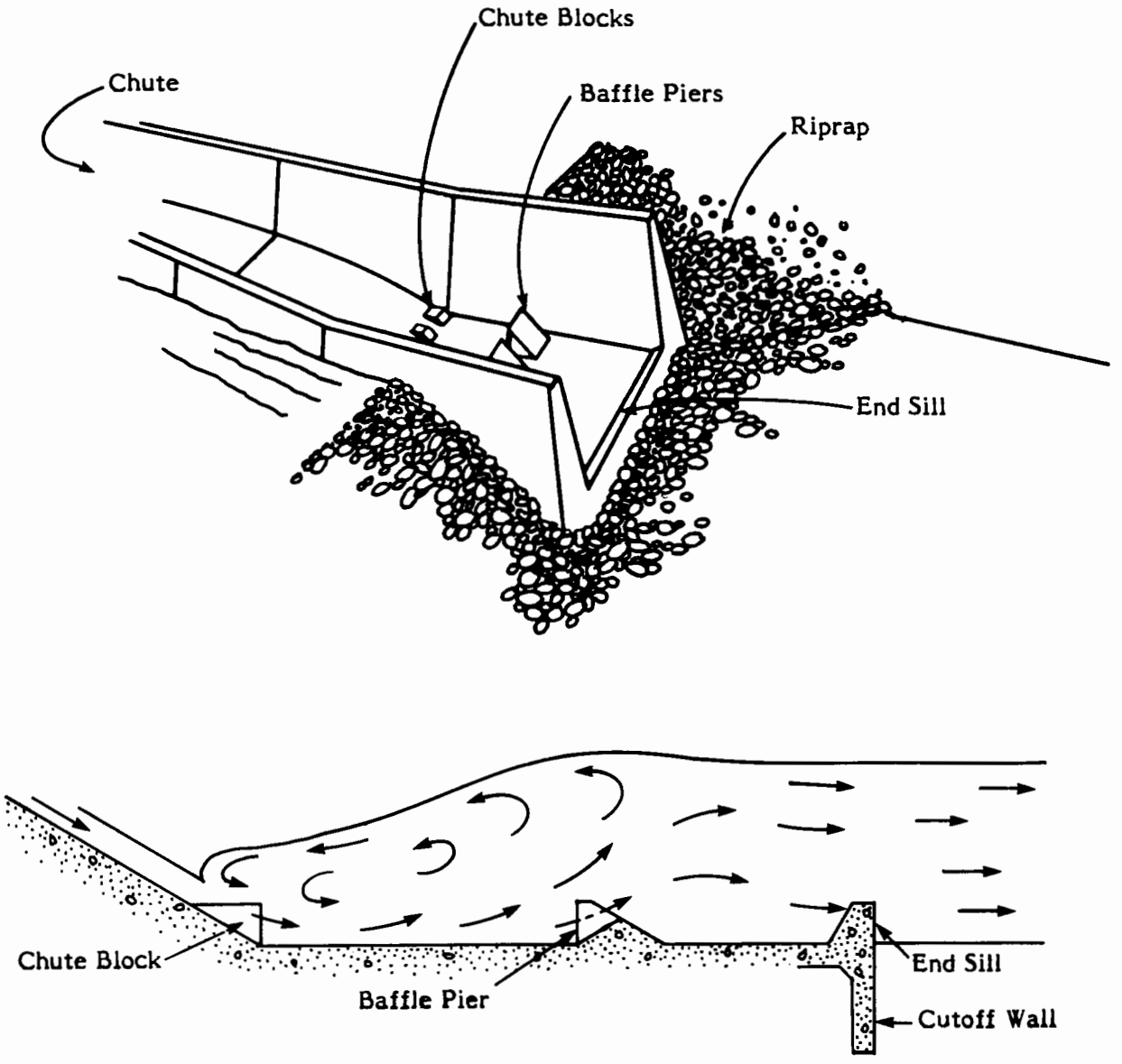

Control Valve

A control valve, typically a needle valve, may be placed at the end of an outlet works conduit to disperse the flow into a spray. The energy of the water then is directed into a pool for further control.

Impact Basin

An impact basin dissipates energy by impeding the flow with a stationary, hanging concrete baffle. Figure IV-33 shows an impact basin.

FIGURE IV-33. IMPACT BASIN

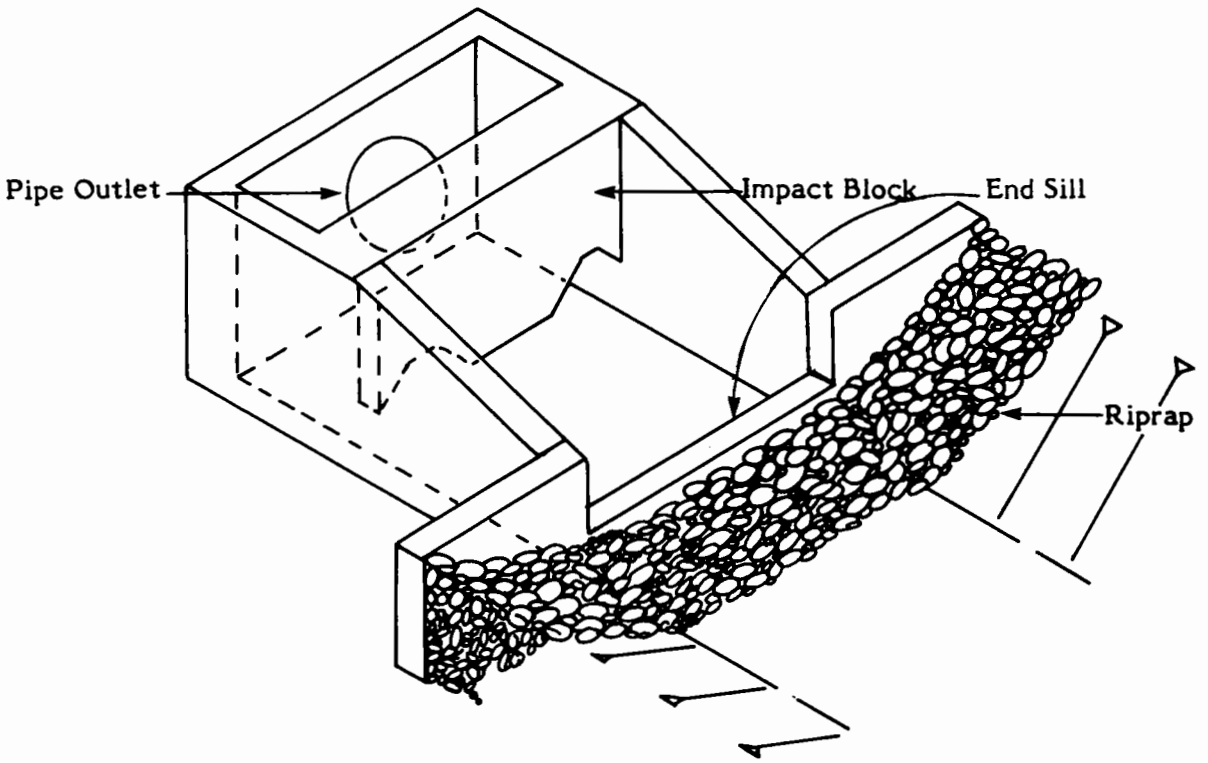

Stilling Well

A stilling well is a water-filled well. The outlet works enters the well at the bottom, and energy is dissipated by turbulence as flow rises in the well. Figure IV-34 shows a stilling well energy dissipator.

FIGURE IV-34. STILLING WELL

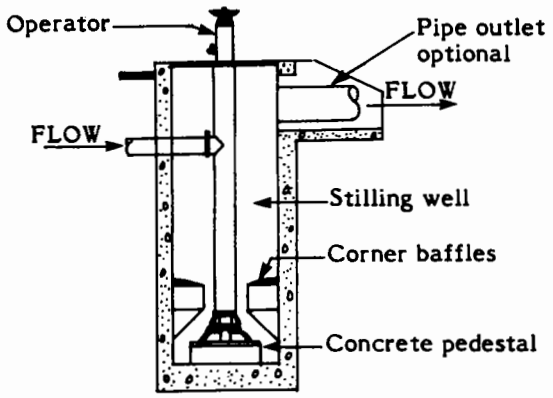

Sectional Elevation

Plunge Pool

A plunge pool is a structure designed to prevent erosion in an area that receives a falling jet of water. Plunge pools usually are lined with riprap, have gradually sloping sides, and often are utilized at pipe and conduit outlets. The pool depth should be sufficient to avoid scouring of the bottom, and the length and width large enough to contain the flow without eroding adjacent areas. Figure IV-35 shows a simple plunge pool.

FIGURE IV-35. PLUNGE POOL

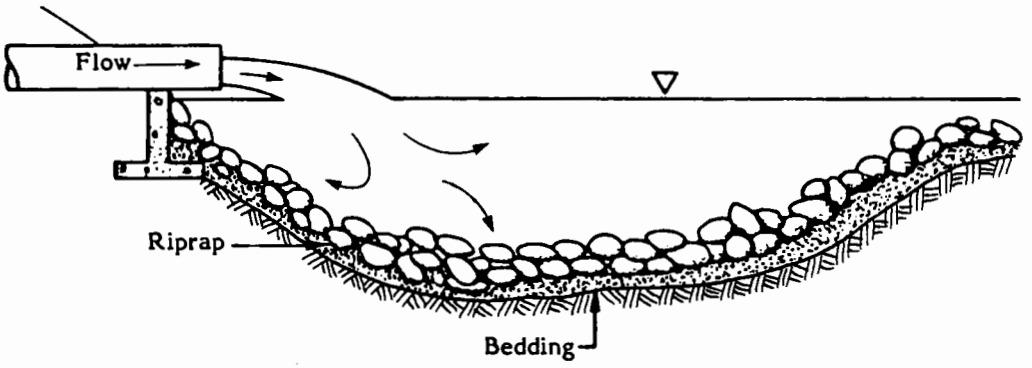

Apron

A level section of concrete, riprap, or gabions, called an apron, is sometimes constructed downstream of the discharge to protect the channel or stream.

INSPECTING THE ENERGY DISSIPATION SECTION

Use these general guidelines during your inspection of the energy dissipation section of a spillway or outlet works:

- First and foremost, know how the structures are supposed to function.
- Make close observations of the structures when in use. Note unusual water currents, eddies, and swirls, especially return currents that would carry rock and debris into the structure from downstream.
- Look for "sand boils," which result from the upward flow of seepage under pressure and are characterized by a boiling action of the surface seepage. A sand boil is often accompanied by a cone of material around the boil which develops from the deposition of foundation or embankment material carried by the seepage.
- If possible, dewater the pool to inspect surfaces for damage.
- To inspect a large pool that cannot be dewatered, plan a boat inspection and record soundings made with a plumb bob. Surveying equipment may be needed to determine the location of subsurface damage.
- Underwater inspections by divers are recommended if problems are suspected. As with any underwater inspection, a detailed inspection plan and a good communication system are important considerations for logging damaged areas.

TYPICAL PROBLEMS WITH THE ENERGY DISSIPATION SECTION

Damage can occur to all elements of an energy dissipation section because these structures reduce the velocity and dissipate the energy of a flow. If the energy dissipation structures fail to operate properly, the dam structure can be eroded at the downstream end, causing a loss of foundation support.

Problems typical to the energy dissipation section of a spillway or outlet works inlcude the following:

- **Deterioration Of Materials.** Follow the actions described in Table IV-2, Inspecting Energy Dissipator Materials, to check for deterioration of materials.

Continued . . .

TYPICAL PROBLEMS WITH THE ENERGY DISSIPATION SECTION (Continued)

TABLE IV-2. INSPECTING ENERGY DISSIPATOR MATERIALS

Materials	Inspection Points
Concrete	✓ Check for signs of cavitation. The sides of chute blocks, baffles, and dentates are exposed to considerable turbulence, and any offsets or irregularities can trigger cavitation.
	✓ Look for erosion damage from abrasion of spillway aprons, the top surfaces and undersides of flip buckets, and the floors, walls, chute blocks, and dentates of stilling basins.
	✓ See if ballmilling has ground circular patterns in the floor or apron of stilling/hydraulic jump basins.
	✓ Check joints for spalls or settlement on one side. See if joint sealant or compressive joint filler is cracked, missing, moved, or deteriorated. Look for broken waterstops.
	✓ Watch for corroded and damaged reinforcement resulting from erosion and cavitation damage. Concrete terminal structures are always reinforced.
	✓ Inspect the submerged portions of plunge pools and stilling/hydraulic jump basins while dewatered, if possible, or use divers. (An underwater camera or a remotely operated vehicle (ROV) might be used before divers.)
Riprap	✓ Make sure that riprap is not displaced or lost, and that foundation material is protected. Look for piping or voids beneath riprap.
Geotextiles	✓ Check riprap or gabion plunge pools and downstream channels for exposed geotextiles, which typically should not be exposed to direct flow or sunlight.

TYPICAL PROBLEMS WITH THE ENERGY DISSIPATION SECTION (Continued)

- **Obstructions.** Check energy dissipation sections for the following obstructions:

  ✓ Debris clogging baffles

  ✓ Plunge pools, stilling/hydraulic jump basins, and areas downstream of flip buckets filling with debris (often rocks and other objects thrown by people)

  ✓ Return currents bringing downstream materials into the outlet structure

  ✓ Heavy vegetative growth (such as thick grasses) in plunge pools

  If you see material blocking flow, note the type of material, dimensions and depth, and location relative to a side or an end.

  A boat can be used to perform a hydrographic survey of a large pool bottom to check for obstructions or damage.

- **Damaged Or Missing Baffles.** Baffles may be cracked, severely eroded, loose, or missing. Look for ice damage if baffles are exposed during winter low flow.

- **Misalignment Of Walls Or Baffles.** The force of flows may deflect the position of terminal structures.

  ✓ Check for verticality, and sight along the top of a sill for alignment deviation.

  ✓ Check instrumentation data to measure deflections.

  Offsets may occur as a result of misalignment, and cavitation can develop downstream of such offsets.

- **Malfunctioning Drains.** Check for clogged drains in the energy dissipation area. Determine whether water flowing from drains is clear or contains sediment or fine material.

- **Backfill And Foundation Deficiencies.** Check the following points when inspecting the energy dissipation section for backfill and foundation deficiencies:

  ✓ Inspect plunge pools, hydraulic jump basins, and riprap-lined dissipators carefully for foundation and backfill problems. Look for settlement and cracks in backfill. Measure the size and distance of problem areas. Measure settlement depth and probe for voids and erosion channels.

Continued . . .

TYPICAL PROBLEMS WITH THE ENERGY DISSIPATION SECTION (Continued)

- ✓ **Watch especially for erosion of backfill behind the downstream portion of a stilling/hydraulic jump basin. Cutoff walls and reinforcing should not be visible.**

- ✓ Settlement or improper elevation or length may change the jump location in stilling/hydraulic jump basins. Check that jump within the structure occurs at design locations. (If the spillway or outlet works is not operating, water stains on the wall will indicate where the jump is actually occurring.)

- ✓ Look for misaligned walls, cracks in the basin, and cracked backfill for evidence that a jump basin is settling.

- ✓ Check a riprap plunge pool for undermining by loss of underlying soil or lack of filter action.

- ✓ If a plunge pool lining is sand or gravel, check for piping.

IV. INSPECTING THE COMPONENTS: RETURN CHANNEL

WHAT IS THE RETURN CHANNEL?

Return channels convey spillway and outlet works discharges to the natural stream channel downstream of the dam structure. A properly operating return channel:

- Passes discharges safely without adversely affecting the design outflow rating of the spillway or outlet works structure.
- Does not impair the stilling capabilities of the energy dissipation component.
- Protects the integrity of the dam structure.

TYPES OF RETURN CHANNELS

Like entrance channels and discharge channels, return channels may be lined or unlined, and may be surfaced with a variety of materials. Figure IV-36 shows how various materials may be used to construct a lined return channel.

FIGURE IV-36. COMPOSITE OF RETURN CHANNEL LININGS

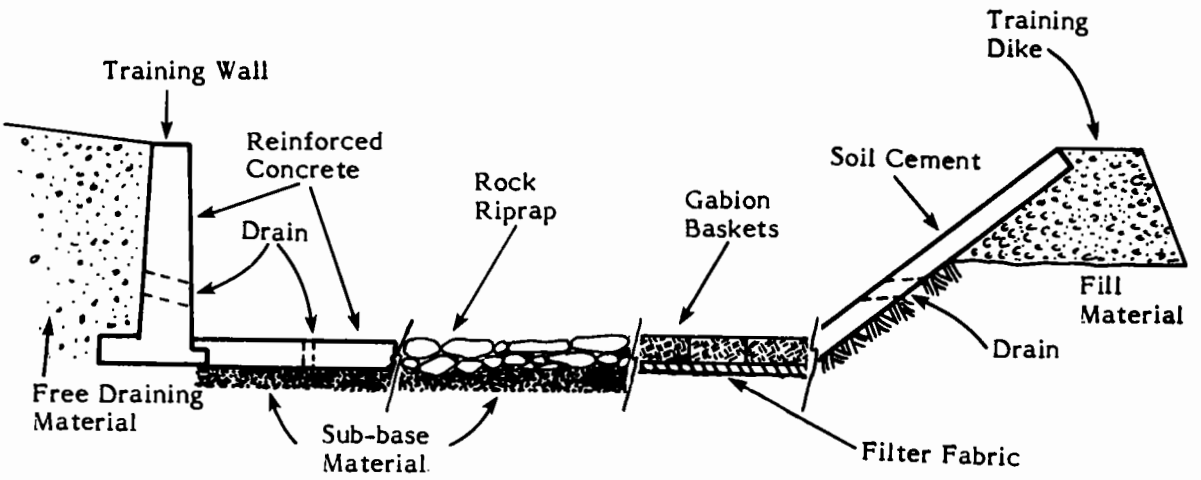

Continued . . .

IV. INSPECTING THE COMPONENTS: RETURN CHANNEL

ELEMENTS OF THE RETURN CHANNEL

The return channel consists of the following elements:

- Channel floor or bottom, which should be uniform to avoid concentrating flows
- Channel slopes or sidewalls (also known as training dikes or training walls), which should contain flows to the channel proper and provide for stability against slope failure

TYPICAL PROBLEMS WITH THE RETURN CHANNEL

The return channel acts to return spillway and outlet works discharges to the natural stream. If the return channel fails, excess discharge is likely to erode the lower portions of a spillway, the embankment groin and toe areas, or areas downstream of the dam.

The return channel is subject to the same general problems with structure and material as other open channels, with the additional concerns described below.

- **Erosion.** Discharges entering the return channel are generally at higher velocity than flows through the entrance channel. The return channel is very susceptible to erosion if not properly sized, aligned, and protected from excess velocity.

  Look for erosion gullies on dikes that may indicate improper compaction, overtopping because of downstream obstructions, or poor vegetative cover.

- **Inadequate Length.** The return channel should extend far enough downstream to ensure that flows will not damage the embankment groin and toe areas. If damage is occurring, it is extremely important to note the deficiency.

IV. INSPECTING THE COMPONENTS: EXERCISE

INSTRUCTIONS: Use the information presented in this unit to answer the following questions. When you have completed all of the questions, check your answers against those presented in the answer key. The answer key can be found immediately following this exercise.

1. List three reasons why dewatering a conduit may be impractical or impossible.

   - _____
   - _____
   - _____

2. In the space below, list at least three elements that might be present in a concrete channel lining.

   _____

   _____

   _____

3. List six conditions to check for when inspecting a conduit internally.

   - _____
   - _____
   - _____
   - _____
   - _____
   - _____

Continued . . .

IV. INSPECTING THE COMPONENTS: EXERCISE

4. What part of a conduit requires special attention and should be inspected when dry, if possible?

_____

5. Place an "X" next to the sites that are the **most likely** to experience cavitation damage to concrete.

_____ Waterline on an entrance channel

_____ Downstream of gates

_____ Tunnel carrying high velocity flows

_____ Plunge pool

_____ Entrance channel floor

6. An inspector discovers gaps in conduit joints, evidently the result of base spreading. In the space below, describe the worst possible consequences of this condition.

_____

_____

_____

_____

7. In which case is an outlet works conduit placed under the most pressure?

☐ Upstream Control Device

☐ Downstream Control Device

Continued . . .

IV. INSPECTING THE COMPONENTS: EXERCISE

8. The structure pictured below is a _____. Write the names of the principal features next to the arrows indicating those features.

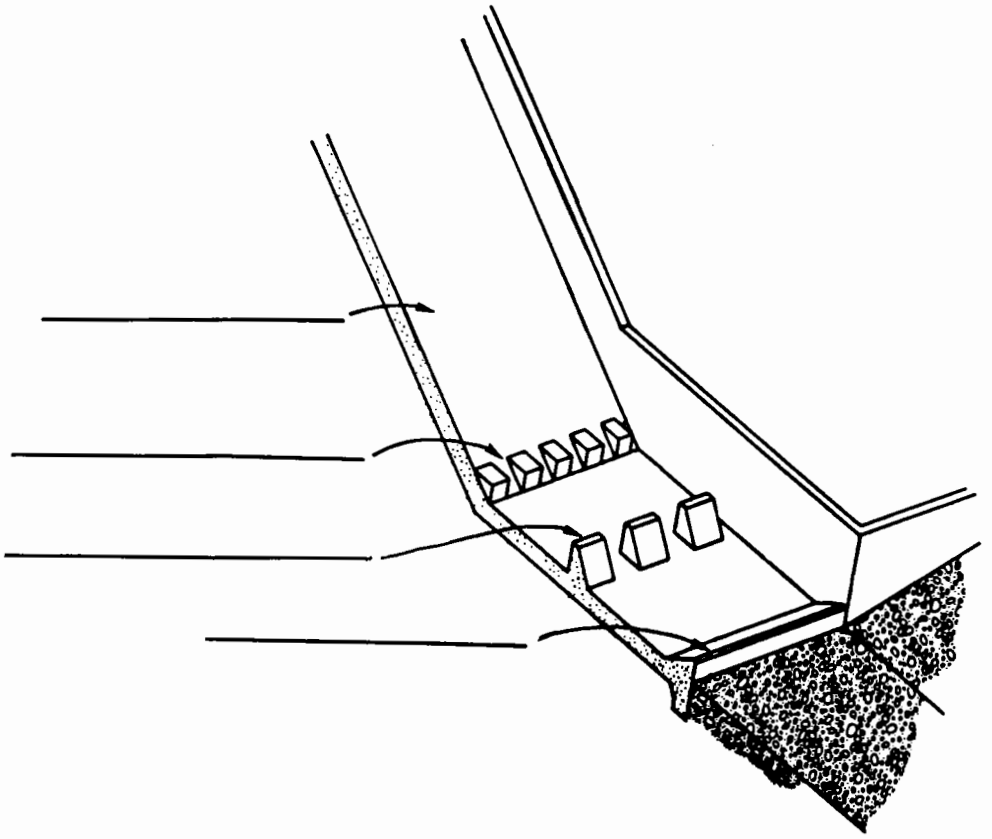

9. Write the letter of each structure listed in the left-hand column next to the name of the spillway or outlet works component(s) in which that structure is located.

STRUCTURES		COMPONENTS	
a.	Drop inlet	_____	Entrance
b.	Downstream conduit	_____	Intake
c.	Stoplogs	_____	Control
d.	Trashboom or logboom	_____	Water Conveyance
e.	Gates	_____	Energy Dissipation
f.	Open channel	_____	Return
g.	Ogee crest		
h.	Stilling basin		
i.	Flip bucket		
j.	Baffles		
k.	Inclined intake		
l.	Gate or valve housing		

Continued . . .

IV. INSPECTING THE COMPONENTS: EXERCISE

10. Under each drawing, write the name of the structure or indicated feature.

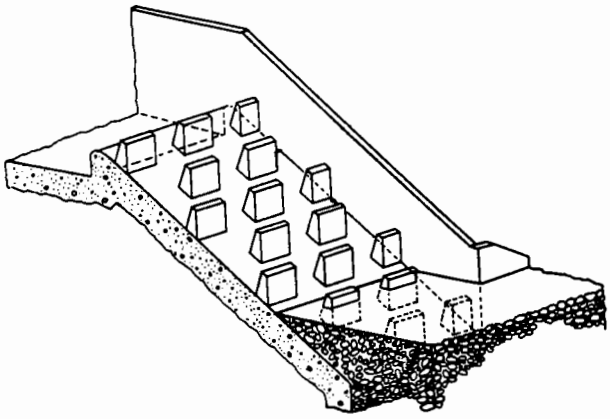

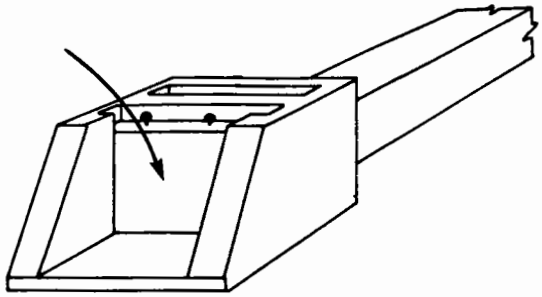

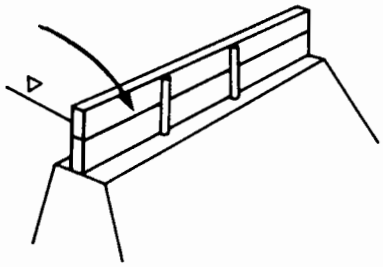

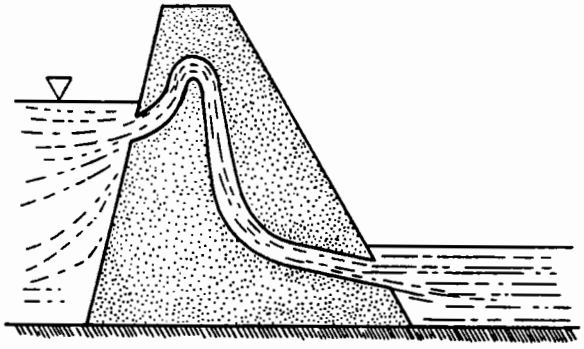

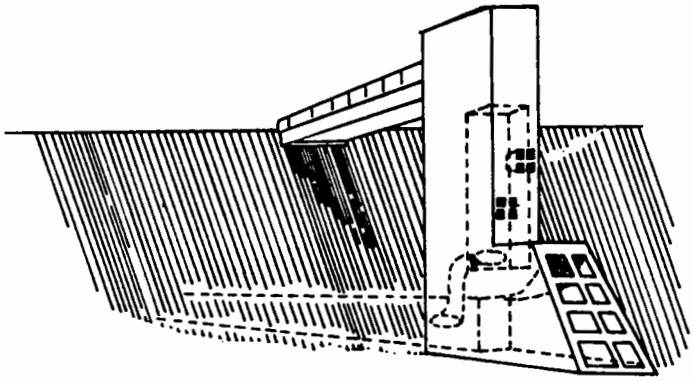

IV. INSPECTING THE COMPONENTS: EXERCISE -- ANSWER KEY

INSTRUCTIONS: Compare your answers to those given below to see how well you learned the information presented in this unit.

1. List three reasons why dewatering a conduit may be impractical or impossible.

   Any three of the following:

   - **There is no bulkhead or closure device.**
   - **Maximum reservoir level must be limited.**
   - **Water flows must be maintained.**
   - **The conduit is not strong enough to withstand hydrostatic pressures in a dewatered condition.**

2. In the space below, list at least three elements that might be present in a concrete channel lining.

   Any three of the following:

   - **Weepholes, pipes, or other means of drainage**
   - **Joints between sections**
   - **Joint sealants**
   - **Compressible joint filler**
   - **Waterstops**
   - **Reinforcing**
   - **Baffles or other energy dissipators**

3. List six conditions to check for when inspecting a conduit internally.

   Any six of the following:

   - **Cavitation**
   - **Corrosion**
   - **Cracking**
   - **Damaged coatings**
   - **Debris impact**
   - **Deformations of the conduit**
   - **Efflorescence or gel**
   - **Erosion**
   - **Joint separation and/or deterioration**
   - **Leakage from the conduit**
   - **Misalignment**
   - **Plugged drain holes**
   - **Ruptured waterstops**
   - **Signs of seepage**
   - **Unsound welds, rivets, or flanges**
   - **Voids behind the conduit wall**

Continued . . .

IV. INSPECTING THE COMPONENTS: EXERCISE -- ANSWER KEY

4. What part of a conduit requires special attention and should be inspected when dry, if possible?

   Joints

5. Place an "X" next to the sites that are the **most likely** to experience cavitation damage to concrete.

   _____ Waterline on an entrance channel

   __X__ **Downstream of gates**

   __X__ **Tunnel carrying high velocity flows**

   _____ Plunge pool

   _____ Entrance channel floor

   Flow velocities in entrance channels would not be great enough to induce cavitation.

   A plunge pool usually is lined with riprap.

6. An inspector discovers gaps in conduit joints, evidently the result of base spreading. In the space below, describe the worst possible consequences of this condition.

   Flows through the conduit leak through the open joints into the embankment. The leakage into the embankment can initiate piping, carrying away embankment material, or the material could also be sucked in the pipe.

7. In which case is an outlet works conduit placed under the most pressure?

   ☐ Upstream Control Device

   ☑ **Downstream Control Device**

Continued . . .

IV. INSPECTING THE COMPONENTS: EXERCISE — ANSWER KEY

8. The structure pictured below is a **stilling/hydraulic jump basin**. Write the names of the principal features next to the arrows indicating those features.

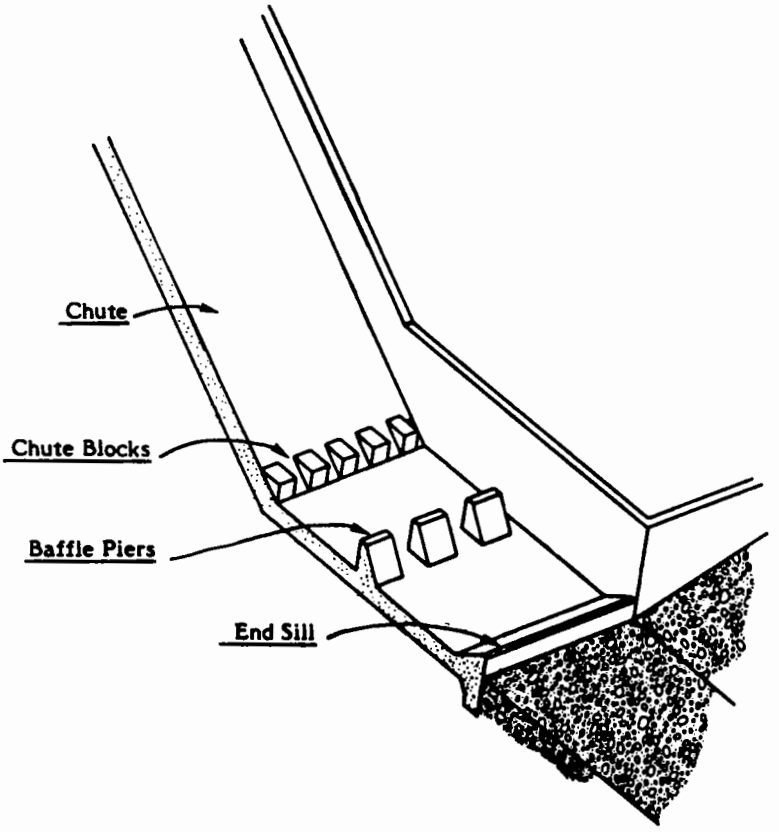

9. Write the letter of each structure listed in the left-hand column next to the name of the spillway or outlet works component(s) where that structure is located.

STRUCTURES	COMPONENTS	
a. Drop inlet	d,f	Entrance
b. Downstream conduit		
c. Stoplogs	k	Intake
d. Trash boom or logboom		
e. Gates	a,c,e,f,g,l	Control
f. Open channel		
g. Ogee crest	b,f,j	Water Conveyance
h. Stilling basin		
i. Flip bucket	f,h,i,j	Energy Dissipation
j. Baffles		
k. Inclined intake	f	Return
l. Gate or valve housing		

Continued . . .

IV. INSPECTING THE COMPONENTS: EXERCISE — ANSWER KEY

10. Under each drawing, write the name of the structure or indicated feature.

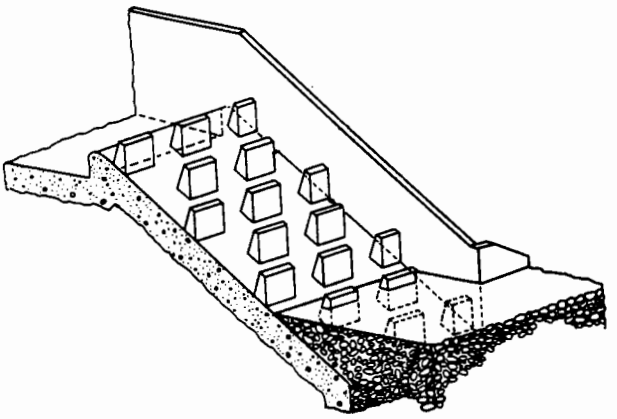

Baffled Apron Drop

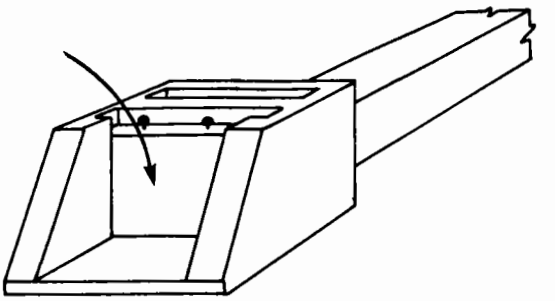

Bulkhead

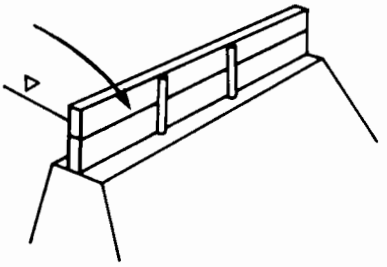

Flashboards

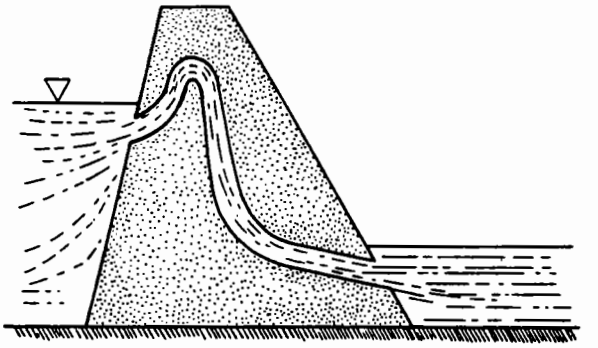

Siphon Spillway

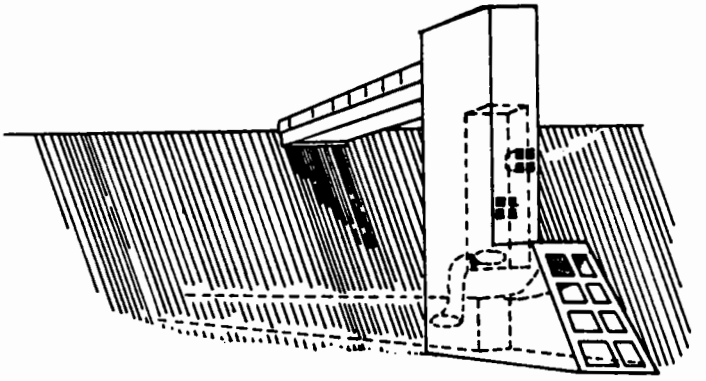

Tower Intake

IV. INSPECTING THE COMPONENTS: SUMMARY

SUMMARY

The following chart summarizes inspection points for the components of spillways and outlet works.

COMPONENT	WHAT TO LOOK FOR . . .
ENTRANCE CHANNEL	
Non-Submerged	✓ Deterioration of materials ✓ Obstructions ✓ Slope and wall failure ✓ Poor floor condition or stability ✓ Erosion caused by wave action ✓ Damaged trash boom
Submerged	✓ Obstructions ✓ Siltation ✓ Slope stability
INTAKE STRUCTURE	✓ Deterioration of materials ✓ Instability ✓ Trashrack/fishscreen problems ✓ Condition of shaped opening ✓ Operability of closure devices

Continued . . .

SUMMARY (Continued)

COMPONENT	WHAT TO LOOK FOR . . .
CONTROL SECTION	
Spillway Control Section	✓ Deterioration of surface materials ✓ Obstructions ✓ Fuseplug problems ✓ Access bridge problems ✓ Problems with gates, stoplogs, and flashboards ✓ Backfill/foundation deficiencies
Gate Or Valve Housing	✓ Deterioration of materials - Cavitation - Erosion - Exposed reinforcing steel - Damaged welds ✓ Loose or missing steel liner plates, gate guides, or seal plates ✓ Misalignment
WATER CONVEYANCE	
Discharge Channel	✓ Deterioration of materials ✓ Obstructions ✓ Channel slope and wall failure ✓ Poor channel floor condition or stability ✓ Defective joints ✓ Backfill/foundation deficiencies
Conduit Or Tunnel	✓ Unsound welds, rivets, or flanges ✓ Metal deformation ✓ Voids beneath conduit liner ✓ Conduit seepage

Continued . . .

IV. INSPECTING THE COMPONENTS: SUMMARY

SUMMARY (Continued)

COMPONENT	WHAT TO LOOK FOR . . .
ENERGY DISSIPATION SECTION	✓ Deterioration of materials ✓ Obstructions ✓ Damaged or missing baffles ✓ Misalignment of walls or baffles ✓ Malfunctioning drains ✓ Backfill/foundation deficiencies
RETURN CHANNEL	✓ Same as non-submerged entrance channel and discharge channel ✓ Erosion ✓ Inadequate length

IV. INSPECTING THE COMPONENTS: VIDEO SEGMENT #3

VIDEO PRESENTATION

At this point you should watch the final video presentation. This video segment presents information on inspecting energy dissipators and return channels.

To watch the video presentation . . .

- Turn on your video player.
- Load the videocassette, if it is not in the player.
- Advance the tape to video segment #3, if the tape has been rewound.
- Watch video segment #3.

After watching video segment #3, rewind the videocassette and then return to the text and complete the Final Review Exercise.

FINAL REVIEW EXERCISE

FINAL REVIEW EXERCISE

INTRODUCTION

This final review exercise may be completed through group discussion or individually. The exercise is divided into three segments. The first part concerns a spillway, while the second and third parts are devoted to outlet works at small and large dams. You may choose which outlet works segment to complete.

PART 1: SPILLWAY SITUATION

INSTRUCTIONS: A situation is described below. After reviewing the situation, answer the questions using the information presented in this module.

When you have completed all the questions, check your answers against those presented in the answer key. The answer key can be found immediately following the last page of this exercise.

THE SITUATION: As part of your inspection of Big Toe Dam in southern Ohio, the gated, lined primary spillway and unlined auxiliary spillway are to be inspected.

The primary spillway, located over the right abutment, is controlled with two radial gates 50 feet wide by 30 feet high, operated from above by a moveable hoist on a steel deck. This spillway has a concrete ogee control section and discharge channel, and a flip bucket for an energy dissipator. The original river bottom below the bucket is very durable rock.

The auxiliary spillway is a vegetated earth open channel cut through the left abutment. The control section is 20 feet above the crest of the primary spillway. At the downstream end, the floor of the return channel is below the water surface of the downstream river.

Continued . . .

PART 1: SPILLWAY SITUATION (Continued)

1. The primary spillway entrance channel has concrete sidewalls and a riprap floor. You observe a crack with water seeping through it on one of the walls. List the facts you should note to describe the crack:

   _____

   _____

   When describing the seepage, you need to note _____

   _____ and _____

   What problem should you look for near the wall? _____

   _____

2. As you inspect the entrance to the auxiliary spillway, you observe recent damage to the side slopes from wave erosion at the waterline. What could happen if the condition is not corrected?

   _____

   _____

3. List three danger signs you should look for when inspecting the entrance channel floor on the auxiliary spillway.

   - _____
   - _____
   - _____

4. A floating trash boom protects the entrance channel to the primary spillway. A network of chains and cables hangs below the water surface to catch debris. The boom is 150 feet long. How do you inspect the structure?

   _____

Continued . . .

PART 1: SPILLWAY SITUATION (Continued)

5. When you inspect the spillway control section, you observe the gates as they are raised and lowered. List two problems that you might see during this operation.

   - _____
   - _____

6. In the control sections of the primary and auxiliary spillways, you observe the conditions listed in the left-hand column. Write the letter of each condition next to a **possible cause** or **result** of the condition.

a.	Badly peeling paint on steel hoist deck	_____	Ground water seepage
b.	Concrete pitting downstream of gates	_____	Abrasion damage
c.	Unusually lush vegetation	_____	Corrosion and weakening of structure
d.	Alkali-aggregate reaction on piers	_____	Settling
e.	Large cracks near gates	_____	Jammed gates interfering with hoist
		_____	Cavitation damage

7. You are inspecting the surface of the concrete-lined discharge channel in the primary spillway. An area along a wall joint shows extensive cracking, spalling, and general deterioration. List three possible causes for the deterioration.

   - _____
   - _____
   - _____

Continued . . .

PART 1: SPILLWAY SITUATION (Continued)

8. You find a 1-1/2 inch offset in the wall of the concrete discharge channel. About 10 inches downstream you observe a cluster of small, sharp-edged pits about 1/4-inch deep. According to dam records, the spillway was used at full capacity the previous spring after a heavy snowmelt. How do you describe your observation?

   Name of problem: _____

   Possible cause(s): _____

   Relative urgency: _____

9. Your inspection includes examining the joints in the concrete discharge channel. List three problems you might find when looking at joints.

   - _____
   - _____
   - _____

10. The floor of the concrete discharge channel is damp around joints and cracks, and one section has heaved up slightly. What could be the cause(s)?

    _____

11. In the space below, write one problem that could develop downstream of the flip bucket, even with durable rock in the area.

    _____

12. The plunge pool below the flip bucket and downstream rock is under water. What procedures should you use to inspect that area?

    _____

    _____

Continued . . .

PART 1: SPILLWAY SITUATION (Continued)

13. When you inspect the concrete flip bucket structure, what specific problems will you look for in each of the listed categories?

    Concrete surface: _____

    Joints: _____

    Reinforcing: _____

14. The left sidewall of the return channel consists of a training dike of earthfill material. You see small erosion gullies on the embankment side of the dike near the downstream toe of the dam. List two problems that might have caused these gullies.

    - _____
    - _____

15. You notice some bare spots in the riprap floor of the return channel, where the riprap washed away. Describe the consequences of this condition.

    _____

    _____

FINAL REVIEW EXERCISE

OUTLET WORKS SEGMENTS

You are only required to complete one of the following two problems. The choice is up to you. The first problem involves a relatively small dam built outside the control of any regulatory agency. The second dam is a larger, more sophisticated dam of the type usually built by Federal agencies. Choose either problem. If you want, you may complete both problems.

FINAL REVIEW EXERCISE

PART 2: OUTLET WORKS - SMALL DAM

INSTRUCTIONS: A situation is described in this exercise, a bit at a time. Use what you know to answer the questions about the situation. When you have completed all of the questions, check your answers against those presented in the answer key. The answer key can be found immediately following the last page of this exercise.

THE SITUATION: You have been assigned to inspect Red Sandy Dam in southwest Oklahoma. Red Sandy Dam is a 40-foot-high floodwater retaining dam.

---

1. You would need additional facts about this dam before you could plan an inspection. What information would you look for as you reviewed the available resources?

_____

_____

_____

_____

_____

2. What sources would you use to obtain this information?

_____

_____

_____

_____

_____

Continued . . .

PART 2: OUTLET WORKS - SMALL DAM (Continued)

THE SITUATION CONTINUES: Suppose you learn that the Red Sandy Dam was completed in 1977. There was a 6-month construction delay between placement of the conduit and completion of the earthwork. The soil is a relatively low-plasticity silt. The conduit is 17-inch reinforced concrete pipe constructed in 16 sections. The energy dissipator is an open chute approximately 70 feet long. A supplemental drainage system alleviates seepage and stabilizes the outlet chute. According to the records, the lower 240-foot section of the chute displaced about 5 feet downstream during construction. This was corrected by adding another 5-foot section of chute. No further information is available about this event.

The last inspection revealed three circumferential cracks in the conduit, each within 2 feet of an anti-seep collar.

3. What questions does this additional information trigger in your mind?

4. How will you assess the condition of the interior of the conduit? What method will you use, and what points are of particular concern, given what you know about this dam?

Continued . . .

PART 2: OUTLET WORKS - SMALL DAM (Continued)

5. What is a possible explanation for the displacement of the chute?

6. What makes separation of the joints a particular possibility in this case?

7. How will you check the alignment of the outlet chute?

THE SITUATION CONTINUES: A month before the scheduled inspection, the region suffers a 25-year storm. Your office receives an emergency call that the embankment of Red Sandy Dam has eroded 20 feet upstream and 6 to 8 feet laterally, due to water pouring through joints in the last stretch of conduit. The outlet chute has broken off and washed 50 feet down the channel. Your boss has rounded up a team to start out immediately and naturally has included you in the roster.

Continued . . .

PART 2: OUTLET WORKS - SMALL DAM (Continued)

8. Knowing what you do about the site, what possible explanations for this situation come to mind?

_____

_____

_____

_____

_____

FINAL REVIEW EXERCISE

PART 3: OUTLET WORKS - LARGE DAM

INSTRUCTIONS: A situation is described in this exercise, a bit at a time. Use what you know to answer the questions about the situation. When you have completed all of the questions, check your answers against those presented in the answer key. The answer key can be found immediately following the last page of this exercise.

THE SITUATION: You have been assigned to inspect Upper Salt Fork Dam, a 40-foot-high floodwater retention dam with a low level outlet works for reservoir evacuation.

1. What steps would you take to prepare for the inspection of the outlet works?

_____

_____

_____

_____

_____

_____

_____

Continued . . .

PART 3: OUTLET WORKS - LARGE DAM (Continued)

THE SITUATION CONTINUES: Your review of the available documentation reveals the following facts about the outlet works:

- An entrance channel was required for diversion during construction.
- There is a submerged concrete intake structure with steel trashracks.
- A 120-foot upstream concrete conduit has a 3-foot inside diameter. Each conduit section is about 20 feet long.
- A concrete dome-shaped gate housing located near the center of the dam houses the upstream gate (a guard gate).
- A steel liner is embedded in the concrete of the gate housing. The liner connects to the upstream and downstream conduit.
- A gate structure houses the downstream gate (a regulating gate).
- Access to the gate housing consists of a steel walkway along the steel carrier pipe.
- There is a 10-foot inside diameter, 120-foot-long, horseshoe-shaped downstream concrete conduit. A 3-foot wide steel pipe rests on supports in this downstream conduit and carries the flows.
- An impact basin is used for energy dissipation.
- A return channel directs flows back to the original river channel.

The figure below illustrates these features.

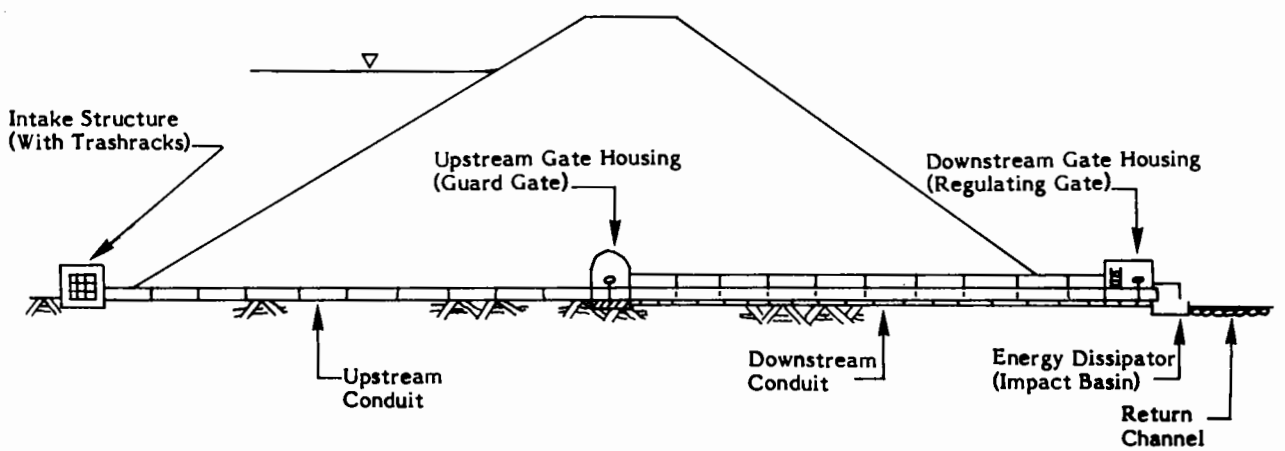

Continued . . .

PART 3: OUTLET WORKS - LARGE DAM (Continued)

THE SITUATION CONTINUES: Previous inspection records do not reveal any major problems. However, during the last inspection it was noted that some of the riprap lining the stilling pool had been removed, apparently during high discharges. A small amount of the underlying soil had been scoured away at the point where the impact basin ends.

2. List the items you would plan to inspect at the entrance channel, and explain why.

3. List the items you would plan to inspect at the intake structure, and explain why.

Continued . . .

PART 3: OUTLET WORKS - LARGE DAM (Continued)

4. List the items you would plan to inspect at the upstream conduit, and explain why.

5. List the items you would plan to inspect at the upstream gate housing, and explain why.

6. List the items you would plan to inspect at the downstream conduit, and explain why.

Continued . . .

PART 3: OUTLET WORKS - LARGE DAM (Continued)

7. What would you look for on the exterior of the steel pipe?

8. What would you look for inside the steel pipe?

9. What deficiencies would you look for when inspecting the downstream gate housing?

Continued . . .

PART 3: OUTLET WORKS - LARGE DAM (Continued)

10. What would you look for in the impact basin?

11. What would you look for in the return channel?

THE INSPECTION BEGINS: During the inspection, you probe with a trashrack rake. It feels like some kind of debris has accumulated around the left side of the intake structure. The project operator reports that he thinks there is a "big log" down there. He tried to move it about six months ago, but couldn't budge it.

12. What does this situation suggest, and what should you recommend?

Continued . . .

PART 3: OUTLET WORKS - LARGE DAM (Continued)

THE INSPECTION CONTINUES: The upstream gate is closed and the downstream gate is fully open. Water approximately 6 inches deep continues to flow through the conduit.

13. What does this water flow suggest?

THE INSPECTION CONTINUES: You enter the 36-inch conduit through the access hatch in the gate chamber. You note that the gate has not completely closed, and that water is spraying from beneath.

14. What does this situation suggest?

Continued . . .

PART 3: OUTLET WORKS - LARGE DAM (Continued)

THE INSPECTION CONTINUES: You already noted about a 6-inch-deep flow of apparent leakage emerging from the end of the conduit. The level of the flowing water is 6 inches deep just downstream of the gate, and still 6 inches at points 5, 10, 15, 20, 25, and 30 feet downstream of the gate. A measurement made at 35 feet from the gate reveals the depth of the water to be 11 inches. Forty feet downstream of the gate the depth measures 6 inches.

15. What is a possible explanation for this observation?

16. What recommendations should you make to the owner?

Continued . . .

PART 3: OUTLET WORKS - LARGE DAM (Continued)

THE INSPECTION CONTINUES: When examining the stilling pool and return channel, you notice that most of the riprap liner has been removed, and find severe erosion in the bottom of the return channel.

17. What should you recommend in your report?

FINAL REVIEW EXERCISE

ANSWER KEY

FINAL REVIEW EXERCISE -- ANSWER KEY

PART 1: SPILLWAY SITUATION

INSTRUCTIONS: Compare your answers to those given below. For more information, review the referenced text pages and video segment.

	REFERENCES
1. The primary spillway entrance channel has concrete sidewalls and a riprap floor. You observe a crack with water seeping through it on one of the walls. List the facts you should note to describe the crack:	Text Pages: II-2 - II-3, II-16 - II-19, IV-4 - IV-6
Location, width, length or extent	Video Segment #1
When describing the seepage, you need to note the **amount of seepage** and **whether the seepage is clear or muddy.**	
What problem should you look for near the wall?	
Settlement. Seepage indicates that backfill and foundation material may be saturated. Check for clogged weepholes or drains.	
2. As you inspect the entrance to the auxiliary spillway, you observe recent damage to the side slopes from wave erosion at the waterline. What could happen if the condition is not corrected?	Text Page: IV-6 Video Segment #1
The unsupported channel side slopes above the eroded area could fail and at least partially block the entrance channel.	

Continued . . .

PART 1: SPILLWAY SITUATION (Continued)

	REFERENCES
3. List three danger signs you should look for when inspecting the entrance channel floor on the auxiliary spillway.	Text Pages: IV-5 - IV-6 Video Segment #1
Any three of the following: • **Wet areas at the toe of the channel slope** • **Erosion** • **Sinkholes** • **Lack of protective vegetation** • **Woody vegetation** • **Debris**	
4. A floating trash boom protects the entrance channel to the primary spillway. A network of chains and cables hangs below the water surface to catch debris. The boom is 150 feet long. How do you inspect the structure?	Text Page: IV-7 Video Segment #1
With a boat, and possibly with divers	

Continued . . .

PART 1: SPILLWAY SITUATION (Continued)

REFERENCES
Text Pages: IV-40 - IV-42 Video Segment #1
Text Page: IV-40 - IV-42 Video Segment #1

5. When you inspect the spillway control section, you observe the gates as they are raised and lowered. List two problems that you might see during this operation.

Any two of the following:

- **Inoperable hoist**
- **Jammed gates**
- **Gates rubbing or binding against the piers**
- **Gate not seated properly on crest**
- **Deterioration of material on underside of the gate**
- **Worn or damaged gate seals**
- **Erosion behind side seal slide plate**

The module Inspecting And Testing Of Gates, Valves, And Other Mechanical Systems contains comprehensive information about these conditions.

6. In the control sections of the primary and auxiliary spillways, you observe the conditions listed in the left-hand column. Write the letter of each condition next to a **possible cause** or **result** of the condition.

a.	Badly peeling paint on steel hoist deck	c	Ground water seepage
b.	Concrete pitting downstream of gates	b	Abrasion damage
c.	Unusually lush vegetation	a	Corrosion and weakening of structure
d.	Alkali-aggregate reaction on piers	e	Settling
e.	Large cracks near gates	d	Jammed gates interfering with hoist
		b	Cavitation damage

Continued . . .

PART I: SPILLWAY SITUATION (Continued)

	REFERENCES
7. You are inspecting the surface of the concrete-lined discharge channel in the primary spillway. An area along a wall joint shows extensive cracking, spalling, and general deterioration. List three possible causes for the deterioration. **Any three of the following:** • **Alkali-aggregate reaction** • **Freeze-thaw damage** • **Differential displacement** • **Erosion** • **Cavitation**	Text Pages: II-2 - II-6 Video Segment #2
8. You find a 1-1/2 inch offset in the wall of the concrete discharge channel. About 10 inches downstream you observe a cluster of small, sharp-edged pits about 1/4-inch deep. According to dam records, the spillway was used at full capacity the previous spring after a heavy snowmelt. How do you describe your observation? Name of problem: **Cavitation damage** Possible cause(s): **Offset exposed to unvented high velocity flows** Relative urgency: **Quite urgent. Once begun, the damage could grow rapidly during subsequent flooding.**	Text Pages: II-4 - II-5 Video Segment #2

Continued . . .

PART 1: SPILLWAY SITUATION (Continued)

	REFERENCES
9. Your inspection includes examining the joints in the concrete discharge channel. List three problems you might find when looking at joints. **Any three of the following:** • **Separation and exposed foundation material** • **Damaged or missing waterstops** • **Defective/missing sealants or compressive joint fillers** • **Soil loss out of open joints** • **Water moving in or out of joints**	Text Pages: II-6 - II-8 Video Segment #2
10. The floor of the concrete discharge channel is damp around joints and cracks, and one section has heaved up slightly. What could be the cause(s)? **Clogged weepholes and drains, or inadequate drainage structures**	Text Pages: II-19 & IV-52 Video Segment #2
11. In the space below, write one problem that could develop downstream of the flip bucket, even with durable rock in the area. **Either of the following:** • **Debris can accumulate and clog the return channel.** • **The underside of the flip bucket adjacent to the rock can erode because of excessive turbulence.**	Text Pages: IV-73 - IV-75 Video Segment #3

Continued . . .

PART 1: SPILLWAY SITUATION (Continued)

	REFERENCES
12. The plunge pool below the flip bucket and downstream rock is under water. What procedures should you use to inspect that area? **If possible, dewater the area with inspection divers or underwater cameras. You could also use a boat to perform a hydrographic survey of the area.**	Text Page: IV-74 Video Segment #3
13. When you inspect the concrete flip bucket structure, what specific problems will you look for in each of the listed categories? Concrete surface: **Offsets, irregularities, and signs of cavitation** **Erosion damage** Joints: **Spalls** **Settlement on one side** **Damaged or missing joint sealant** **Evidence of broken waterstops** **Seepage** Reinforcing: **Exposed, corroded, or damaged parts**	Text Page: IV-74 Video Segment #3
14. The left sidewall of the return channel consists of a training dike of earthfill material. You see small erosion gullies on the embankment side of the dike near the downstream toe of the dam. List two problems that might have caused these gullies. **Any two of the following:** • **Improper compaction of the training dike** • **Possible obstruction downstream creating higher tailwater elevations than expected (overtopping)** • **Inadequate vegetative cover**	Text Page: IV-78 Video Segment #3

Continued . . .

PART 1: SPILLWAY SITUATION (Continued)

REFERENCES
Text Page: IV-78 Video Segment #3

15. You notice some bare spots in the riprap floor of the return channel, where the riprap washed away. Describe the consequences of this condition.

    The displaced riprap creates areas of turbulence, leaving the bedding or foundation unprotected to wash away. This process reduces the hydraulic capacity of the return channel.

FINAL REVIEW EXERCISE — ANSWER KEY

PART 2: OUTLET WORKS - SMALL DAM

INSTRUCTIONS: Compare your answers to those given below. For more information, review the referenced text pages and video segments.

	REFERENCES
1. You would need additional facts about this dam before you could plan an inspection. What information would you look for as you reviewed the available resources? **Some of the things you would need to know are listed below. You may have thought of some additional points to check.** • **When the dam was constructed** • **Any special construction difficulties** • **Type of foundation** • **Materials used for the conduit** • **Type of energy dissipator** • **Effects of local water quality on construction materials** • **Typical flow rates, and maximum capacity** • **Any operational difficulties** • **Frequency of previous inspections** • **Results of previous inspections** • **Daily inspection reports during construction**	Text Pages: III-3 - III-5
2. What sources would you use to obtain this information? • **Design documents** • **Construction records** • **As-built drawings** • **Previous inspection reports** • **Operational reports** • **Personal anecdotes from other inspectors, or supervisor**	Text Page: III-3

Continued . . .

PART 2: OUTLET WORKS - SMALL DAM (Continued)

	REFERENCES
3. What questions does this additional information trigger in your mind?	Text Pages: III-3 - III-4
• **What caused the 5-foot displacement of the chute, and was any corrective action taken?** • **What is causing the cracks in the conduit?** • **Was the alignment of the outlet chute checked carefully during the last inspection?** • **Were the pipe joints checked carefully during the last inspection?**	Video Segments #2 & #3
4. How will you assess the condition of the interior of the conduit? What method will you use, and what points are of particular concern, given what you know about this dam?	Text Pages: IV-58 - IV-61 Video Segment #2
At 17 inches in diameter, the conduit is too small to check personally. Remote video equipment is needed. Given the cracks found previously, it seems imperative that the internal inspection take place. You should check each of the previously reported cracks carefully, to see if the condition has worsened. Look for new cracks. If any are found, try to correlate their position with the location of a joint or an anti-seep collar. Check the joints for separation or compression, and for displacement of the gasket.	
5. What is a possible explanation for the displacement of the chute?	Text Page: II-16 Video Segment #3
The foundation material at the outlet may have been unstable.	

Continued . . .

PART 2: OUTLET WORKS - SMALL DAM (Continued)

	REFERENCES
6. What makes separation of the joints a particular possibility in this case?	Text Pages: II-14 - II-15, IV-61
The instability of the outlet chute foundation and the displacement of the chute may be exerting longitudinal stress on the conduit.	Video Segments #2 & #3
7. How will you check the alignment of the outlet chute?	Text Page: IV-75
First, check visually for any obvious misalignment. Then, use surveying equipment to compare the present readings with past recordings.	Video Segment #3
8. Knowing what you do about the site, what possible explanations for this situation come to mind?	Text Pages: II-14 - II-16, IV-61
One possible explanation is that unstable foundation material at the outlet end may have caused the outlet chute and the last sections of conduit pipe to become displaced. Longitudinal stress could have caused the pipe joints to pull apart sufficiently for the gaskets to be displaced or even removed.	Video Segment #2
Another possibility is that the known cracks could have widened and/or new ones developed, due to whatever caused the first observed cracks.	
In either case, the released water would pour through the openings in the conduit, eroding the downstream slope of the dam and displacing the outlet chute.	

FINAL REVIEW EXERCISE -- ANSWER KEY

PART 3: OUTLET WORKS - LARGE DAM

INSTRUCTIONS: Compare your answers to those given below. For more information, review the referenced text pages and video segments.

	REFERENCES
1. What steps would you take to prepare for the inspection of the outlet works? **Obtain and review records of design and construction.** **Review previous inspection reports.** **Review maintenance records.** **Make necessary arrangements with the owner regarding scheduling and equipment.** **Note specific areas of known or suspected problems.**	Text Pages: III-3 - III-5
2. List the items you would plan to inspect at the entrance channel, and explain why. **There has been no evidence of problems, so no inspection of the submerged channel would be planned.**	Text Pages: IV-8 - IV-10
3. List the items you would plan to inspect at the intake structure, and explain why. **There has been no evidence of problems, so no visual inspection would be planned. Depending on the level of the reservoir, it may be possible to use long probes or rakes to determine the amount of silt accumulation around the intake, and whether trash has accumulated at the trashrack.**	Text Page: IV-12 Video Segment #1

Continued . . .

PART 3: OUTLET WORKS - LARGE DAM (Continued)

	REFERENCES
4. List the items you would plan to inspect at the upstream conduit, and explain why.	Text Pages: IV-57 - IV-61
The interior of the upstream conduit is pressurized and is not readily accessible. A visual inspection may not be necessary, since there were no indications of trouble with the upstream conduit in the last inspection. However, the upstream slope of the embankment should be examined along the alignment of the outlet works for slumps (depressions) and holes.	Video Segment #2
5. List the items you would plan to inspect at the upstream gate housing, and explain why.	Text Page: IV-43 - IV-44
Ensure that adequate lighting and ventilation exist. Inspect for cracks in the concrete that may be caused by excessive stresses. These could allow seepage water to enter the conduit. Inspect for ponded water, which may indicate that settlement has occurred. Inspect the joint between the gate housing and the downstream conduit for differential settlement, and for the condition of the seal or waterstop.	Video Segment #1
6. List the items you would plan to inspect at the downstream conduit, and explain why.	Text Pages: IV-57 - IV-61
Ensure that adequate lighting and ventilation exist. Inspect for cracks in the concrete caused by excessive stresses that could allow seepage water to enter the conduit. Inspect for ponded water, which may indicate that settlement has occurred. Inspect the joints between conduit sections for differential settlement, and for the condition of seals or waterstops. Inspect the condition of steel pipe supports. Inspect the condition of the steel walkway.	Video Segment #1

Continued . . .

PART 3: OUTLET WORKS - LARGE DAM (Continued)

	REFERENCES
7. What would you look for on the exterior of the steel pipe?	Text Pages: II-9 - II-10, IV-57
Examine the exterior protective coating. **Examine the welds, flange connections, and other joint details.** **Watch for corrosion and indications of stress.**	Video Segment #2
8. What would you look for inside the steel pipe?	Text Pages: II-9 - II-10, IV-60
Examine the interior protective coating. **Inspect the interior welds and flange connections.** **Watch for corrosion and stress.** **Check for cavitation and erosion damage. Cavitation is likely to occur near the gates.**	Video Segment #2
9. What deficiencies would you look for when inspecting the downstream gate housing?	Text Pages: IV-43 - IV-44
Inspect for cracks in the concrete that may be caused by excessive stresses. **Check for concrete deterioration.** **Check metalwork for corrosion.** **Inspect the joint between the gate housing and conduit.** **Look for any discontinuities that might induce cavitation.**	Video Segment #1
10. What would you look for in the impact basin?	Text Pages: IV-74 - IV-76
Inspect the concrete for cracks and deterioration. **Watch for exposed and corroding reinforcement.** **Check for debris in the basin that may be causing erosion.**	Video Segment #3

Continued . . .

PART 3: OUTLET WORKS - LARGE DAM (Continued)

	REFERENCES
11. What would you look for in the return channel? **Check the impact basin structure for the adequacy of repairs to the missing riprap that was mentioned in the previous report. Check for any additional erosion or misplacement of riprap. Inspect the condition of the channel protection.**	Text Pages: IV-77 - IV-78 Video Segment #3
12. What does this situation suggest, and what should you recommend? **There may be significant blockage of the intake. The fact that the "big log" couldn't be moved suggests that there is a possibility of trashrack damage. The owner should remove any logs and debris to restore full outlet capacity. The owner should be cautioned to determine beforehand if any logs have become lodged in the trashrack. If so, an attempt to remove them may cause more damage.**	Text Pages: IV-12, IV-19 - IV-21 Video Segment #1
13. What does this water flow suggest? **It suggests that there is significant leakage at the upstream gate.**	Text Pages: IV-43 - IV-44 Video Segment #1
14. What does this situation suggest? **It suggests that the gate is obstructed by debris. Another possibility is that the gate guide has become loose and that the gate is binding before it can close completely.**	Text Pages: IV-43 - IV-44 Video Segment #1

Continued . . .

PART 3: OUTLET WORKS - LARGE DAM (Continued)

	REFERENCES
15. What is a possible explanation for this observation?	Text Page: IV-61
This observation suggests that the conduit has been subject to settlement.	Video Segment #2
16. What recommendations should you make to the owner?	Text Page: III-7
The owner should determine the amount of settlement by a survey. The results of the survey should be compared with the previous survey to see if any change has occurred.	Video Segment #2
17. What should you recommend in your report?	Text Pages: IV-74, IV-78
The owner should replace the filter and riprap in the stilling pool, and repair and stabilize the return channel.	Video Segment #3

APPENDIX A

GLOSSARY

GLOSSARY

ABUTMENTS - Those portions of the valley sides to which the ends of the dam join, and also those portions beyond the dam that might present seepage or stability problems.

ACCESS BRIDGE - A structure that provides access from the crest or reservoir rim to an intake structure.

ACCESS TUNNEL - A cast or drilled shaft providing maintenance and inspection access to buried conduits or control devices.

ADIT - A gallery that is used for entrance to a gallery system or that serves as a connecting passageway between galleries or other features in the dam. Also, a closed-end tunnel.

AERATION SLOT - An air passage located on the floor of a water conveyance to equalize pressure.

AIR RELEASE VALVE - A mechanical device used to control air pressure in a conduit.

AIR SLOT - See **AERATION SLOT.**

AIR VENT - An air passage located on the roof of a conduit, usually downstream of a gate, to prevent vacuum formation and to provide ventilation.

ALKALI REACTION - A chemical reaction between certain aggregate mixtures and the alkalis (sodium and potassium) that causes irreversible expansion of concrete.

ANCILLARY EQUIPMENT - Bridges, piers, decks, walkways, ladders, or other structures that provide support and access to various portions of a spillway.

ANTI-VORTEX PIERS - Upright structures that impede circular water currents.

APPURTENANT STRUCTURES - Auxiliary features of a dam that are necessary to the operation of the dam project. These may include spillways, outlet works, gates and valves, power plants, tunnels, and switchyards.

APRON - A section of level concrete or riprap downstream of the discharge that protects the channel or stream.

AS-BUILT DRAWINGS - Plans or drawings portraying the actual dimensions and condition of a dam and appurtenant structures as they were built. As-built drawings document construction changes to the original design due to field conditions and material availability.

BAFFLE - An upright obstruction that slows water flow.

BAFFLE BLOCK - A block of reinforced concrete constructed in a channel or stilling basin to dissipate the energy of the flowing water.

GLOSSARY

BAFFLED APRON DROP - An open channel discharge section with an array of barriers embedded in the channel floor to dissipate energy from the flow as it drops through the channel.

BEACHING - The removal by wave action of a portion of the upstream slope of the embankment, and the depositing of material farther down the slope. Characterized by a resulting flat area or beach.

BONKER - A hardwood dowel with a metal tip used to sound for voids under concrete.

BREACH - An eroded opening through a dam that drains the reservoir. A controlled breach is a construction opening. An uncontrolled breach is an unintentional opening that allows uncontrolled discharge from the reservoir.

BULK LENGTH - A sufficient mass of material, usually in situ earth or rock, designed to provide a barrier against complete breaching of a spillway.

CAVITATION - A process that damages concrete or metal by the formation of bubbles in a water flow, created when offsets or irregularities exist on a flow surface exposed to high velocities.

CONDUIT - A pipe or box structure constructed by joining sections of pipe or conduit in an excavated trench, inside a tunnel, on the ground surface, or supported on cradles.

CONSTRUCTION JOINT - The interface between two successive placings of concrete where bond is intended.

CONTROL DEVICE - A gate or valve used to regulate the flow of water through an outlet works.

CONTROL HOUSING - The structure enclosing or supporting a gate or valve that controls the release of water through an outlet works.

CONTROL SECTION - A spillway component that receives the flow of water from the entrance channel and determines the elevation and capacity.

CREST - The top surface of the dam or high point of the spillway control section.

CUTOFF COLLAR - Projections around a conduit within the impervious portion of a dam to lengthen the seepage path along the outer surface of the conduit.

CUTOFF WALL - A wall or impervious material usually of concrete, asphaltic concrete, or steel sheet piling constructed under a structure to reduce seepage from the reservoir beneath and adjacent to the dam.

DEAD STORAGE - See **INACTIVE STORAGE.**

GLOSSARY

DEFICIENCY - An anomaly or condition that affects or interferes with the proper and safe operation of the dam.

DESICCATION - The process of drying up or dehydrating.

DIFFERENTIAL MOVEMENT - Localized movement of one section of a structure relative to adjacent sections.

DISCHARGE SECTION - A spillway component that conveys flow from the control section to the terminal section, return channel, or natural stream.

DOWNSTREAM CHANNEL - See **RETURN CHANNEL.**

DOWNSTREAM FACE - The inclined surface of a concrete dam that faces away from the reservoir.

DOWNSTREAM SLOPE - The inclined surface of an embankment dam that faces downstream, away from the reservoir.

DROP INLET - A vertical orifice that serves as a control device.

EFFLORESCENCE - A deposit of salts that is leached from within the concrete and deposited on the surface.

EMBANKMENT - Fill material, usually earth or rock, placed with sloping sides.

EMBANKMENT DAM - Any dam constructed of excavated natural materials or industrial waste materials. (Includes both earthfill and rockfill dams.)

ENERGY DISSIPATOR - An appurtenance at the end of spillways and outlet works that uses turbulence to aid in the dispersal of excess energy in the water. Types include baffles, plunge pools, impact basins, stilling pools, and stilling wells, among others.

ENTRANCE CHANNEL - A structure that conveys water to the control section of the spillway or to the intake structure of the outlet works.

FINES - A term describing the fraction of a soil sample that is smaller than the 0.074 mm (No. 200) sieve. For example, a material such as gravel may be described as having a certain percentage of fines (meaning that the gravel is mixed with silt or clay).

FISHSCREENS - Barred or screened panels placed across an intake to prevent the entrance of fish; similar to trashracks.

FLASHBOARDS - Individual boards or panels supported by vertical pins or stanchions anchored to the spillway crest to increase storage.

GLOSSARY

FLIP BUCKET - An upward-curved structure located at the end of a chute, designed to be used when water depth does not permit a hydraulic jump to form.

FREEBOARD - The vertical distance between a stated water level and the top of a dam or spillway crest.

FREE FLOW - Flow that occurs either in an open waterway or in a conduit that flows partly full.

FULL CONDUIT FLOW - See **PRESSURE FLOW.**

FUSEPLUG - An embankment of erodible material placed across a spillway which is designed to fail in a controlled manner during rare, severe flooding when overtopping occurs.

GABION - A prefabricated, square or rectangular wire cage or basket filled with rocks. Gabions are free-draining and capable of being stacked for slope protection.

GALLING - Wearing down of a metal surface by rubbing against a material of equal or greater hardness.

GATE - An adjustable device used to control or stop the flow of water in a waterway. A gate consists of a leaf or member which is moved across the waterway from an external position.

GROIN - See **SLOPE-ABUTMENT INTERFACE.**

HYDRAULIC JUMP - The abrupt rise in water surface that may occur in an open channel or stilling basin when water flowing at high velocity is suddenly slowed down.

HYDRAULIC JUMP BASIN - See **STILLING/HYDRAULIC JUMP BASIN.**

ICE PREVENTION SYSTEM - A method for retarding the formation of ice around appurtenant structures. Often, compressed air is released beneath the reservoir surface, creating water movement to prevent icing.

INACTIVE STORAGE - Storage area that accommodates sediment deposition, fish and wildlife conservation, and recreational purposes. Water in this area is only withdrawn from the reservoir during an emergency.

INTAKE STRUCTURE - Placed at the beginning of an outlet works waterway, the intake structure establishes the ultimate drawdown level of the reservoir by the position of its opening(s) to the outlet works. Intake structures may be vertical or inclined towers, drop inlets, or submerged, box-shaped structures. Intake elevations are determined by the head needed for discharge capacity, storage reservation to allow for siltation, the required amount and rate of withdrawal, and the desired extreme drawdown level.

GLOSSARY

JUMP BASIN - See **STILLING/HYDRAULIC JUMP BASIN.**

LEAKAGE - The undesirable flow of water through joints, cracks, and openings in hydraulic structures.

MISALIGNMENT - The movement of a structure from its design location.

OGEE - A weir profile shaped with a curving crest and downstream face of a concrete dam.

Ogee Crest - An ogee used as a control in combination with other spillway elements.

Ogee Spillway - A drop spillway constructed in the ogee form.

OPEN-CHANNEL FLOW - See **FREE FLOW.**

OPERATING BRIDGE - A structure that extends over the control section to support gates and other equipment.

ORIFICE - The opening of an inlet structure, or the open end of a conduit or tunnel.

OUTLET WORKS - A system of dam components that regulates or releases water impounded by a dam. Components of an outlet works include an entrance channel, intake structure, conduit, gate or valve housing, energy dissipators, and return channel.

OVERFLOW CREST - A weir or sill designed for water to spill over when the reservoir level rises above the weir elevation.

PATTERN CRACKING - Fine openings on concrete surfaces in the form of a pattern; resulting from a decrease in volume of the material near the surface, or increase in volume of the material below the surface, or both.

PENSTOCK - A pipeline or pressure conduit leading from a headrace or reservoir to power-producing turbines. Because of the possibility of sudden load changes, a penstock is designed to withstand pressure surges.

PIPING - The progressive internal erosion of embankment, foundation, or abutment material.

PRESSURE FLOW - The situation that exists when a control gate is placed downstream from the conduit entrance: the portion of conduit above the control gate flows under pressure. An ungated conduit can also flow under pressure, depending on the geometry of the inlet and the conduit.

RESERVOIR - The body of water impounded by a dam.

RETURN CHANNEL - A structure that conveys spillway and outlet works discharges to the natural stream channel downstream of the dam structure.

GLOSSARY

RIPRAP - Broken rock or boulders placed on floors and slopes of channels and pools to provide protection from erosion.

ROLLER COMPACTED CONCRETE (RCC) - A type of concrete construction in which a mixture of well-graded gravel fill with low cement content is laid in layers and compacted using heavy equipment.

SAF (SAINT ANTHONY FALLS) OUTLET - A terminal structure that includes a chute terminating in chute blocks, a level floor with baffles, and an end sill.

SAND BOIL - A condition resulting from the upward flow of seepage under pressure and characterized by a boiling action of the surface seepage. Often accompanied by a cone of material around the boil which develops from the deposition of foundation or embankment material carried by the seepage.

SEEPAGE - The passage of water through embankment, foundation, or abutment material.

SEEPAGE COLLAR - See **CUTOFF COLLAR.**

SHOTCRETE - A sand-cement mixture sprayed on rock, concrete, or compacted earth.

SINKHOLE - A depression resulting from loss of material underlying the surface.

SLIDE - The unplanned descent of a mass of earth or rock down a slope.

SLOPE-ABUTMENT INTERFACE - The contact between the abutment and the embankment slopes.

SOIL-CEMENT - A well-compacted mixture of soil, Portland cement, and water that produces a hard material similar to concrete.

SPALLING - The loss of chunks of concrete from a surface, usually because of compression, impact, or abrasion.

SPILLWAY - A structure that passes normal and/or flood flows in a manner that protects the structural integrity of the dam.

> **Auxiliary (Emergency) Spillway** - A secondary spillway that passes floodwater during rare, severe floods, and may be expected to need extensive repair after such events.
>
> **Box Inlet Spillway** - A drop spillway with a square or rectangular overflow crest located on the upstream face or slope of the dam.
>
> **Culvert Spillway** - A spillway design; a tube spillway with a straight, uniform slope.
>
> **Drop Spillway** - A spillway design with a weir face that serves as the discharge section.

SPILLWAY (Continued)

Labyrinth Spillway - A drop spillway with an accordian-shaped overflow crest.

Ogee Spillway - A drop spillway in an ogee form.

Primary Spillway (Principal Spillway) - A spillway used for normal operation, and the first-used spillway during flood flows.

Service Spillway - A type of primary spillway that serves as or substitutes for an outlet works.

Siphon Spillway - A spillway design; a tube spillway with an elevated loop permitting formation of a vacuum that results in siphoning of reservoir water.

SPLITTER PIERS - See **ANTI-VORTEX PIERS.**

STANCHION - An upright support for flashboards.

STILLING/HYDRAULIC JUMP BASIN - A structure designed to produce a hydraulic jump that will dissipate energy.

STOPLOGS - Large logs, timbers, or steel beams placed on top of each other with their ends held in guides on each side of a channel or conduit to provide an inexpensive and easy means of closure.

SULFATE ATTACK - Chemical and/or physical reaction between sulfates (usually in soil or ground water) and concrete or mortar. Deterioration of the concrete or mortar may result. Sulfate attack is common in older dams in the western United States where sulfate-resistant cement was not used, or alkali aggregate was used.

TAILWATER - Water at the toe of a spillway or outlet works, such as water in a stilling basin, plunge pool, or stream. The water downstream from a structure or dam.

TERMINAL SECTION - A structure containing one or more energy dissipators.

TERMINAL STRUCTURE - See **ENERGY DISSIPATOR.**

TOE OF DAM - The junction of the downstream slope of a dam with the ground surface; also referred to as the **downstream toe.** For an embankment dam, the junction of the upstream face with the ground surface is called the **upstream toe.**

TRAINING DIKE OR WALL - A dike or wall that trains or directs flow to a desired location while protecting the surrounding area or nearby embankment.

TRASH BOOM - A floating structure that provides a barrier to catch debris and prevent it from entering a spillway.

GLOSSARY

TRASHRACK - A structure of metal or reinforced concrete bars located at the intake of a waterway to prevent entrance of floating or submerged debris above a certain size.

TUNNEL - An enclosed waterway excavated through in situ material, usually away from the dam.

UPSTREAM FACE - The vertical or near-vertical surface of a concrete dam that is in contact with the reservoir.

UPSTREAM SLOPE - The inclined surface of an embankment dam that is in contact with the reservoir.

VALVE - An adjustable device used to control or stop the flow of water in a waterway. A valve is fixed permanently within the waterway, and has a closure member that is either rotated or moved transversely or longitudinally in the waterway in order to control or stop the flow.

WATER CONVEYANCE COMPONENT - A channel, tunnel, or conduit of a spillway or outlet works.

WATER CONVEYANCE STRUCTURE - A non-specific reference to a spillway, a conduit, a tunnel, an outlet works, an open channel, or a penstock.

WATERSTOP - A continuous strip of waterproof material, usually PVC, metal, or rubber, designed to control cracking and limit moisture penetration through concrete joints.

WEATHERING - Changes in color, texture, strength, chemical composition, or other properties of a natural or artificial material due to the action of the weather.

WEEPHOLE - A drain embedded in a concrete or masonry structure to pass moisture from the foundation material to the surface of the structure.

WEIR - A structure of given shape and dimensions built across a stream or channel to control or measure flow quantities.

WEIR LENGTH - The distance across which water flows measured perpendicular to the direction of flow.

WET WELL - A vertical pipe or shaft used to access a gate or valve controlling flow in the conduit that takes water away from the well. Generally, another conduit brings water from the reservoir to the well. If this conduit is ungated, or is in the open position if gated, then the water level in the well will be approximately the same as the water level in the reservoir.

APPENDIX B

REFERENCES

REFERENCES

Compilation of Structure Deficiences. U.S. Department of Agriculture, Soil Conservation Service, 1970.

Dam Safety: An Owner's Guidance Manual. Colorado Division of Disaster and Emergency Services, December 1986.

Dam Safety Manual. State Engineer's Office, State of Colorado, June 1983.

Design of Small Dams, A Water Resources Technical Publication. U.S. Department of the Interior, Bureau of Reclamation, Third Edition, 1987.

Engineering Condition Survey of Concrete in Service. Richard L. Stowe and Henry T. Thornton, Jr. Department of the Army, 1984.

Guide for Making a Condition Survey of Concrete in Service. American Concrete Institute, ACI Committee 201, Reaffirmed 1979.

Guide for Safety Evaluation and Periodic Inspection of Existing Dams, EM 7570-1. U.S. Department of Agriculture, Soil Conservation Service and U.S. Forest Service, July 1980.

Hydraulic Design of Stilling Basins and Energy Dissipators, A Water Resources Technical Publication, Engineering Monograph No. 25. U.S. Department of the Interior, Bureau of Reclamation, July 1963.

Inspection and Performance Evaluation of Dams - A Guide for Managers, Engineers, and Operators, Electric Power Research Institute, AP-4714, Project 1745-14. Morrison-Knudsen Engineers, September 1986.

Manual for the Inspection, Maintenance and Operation of Dams in Pennsylvania, Pennsylvania Department of Environmental Resources, Division of Dam Safety, 1986.

Practices for Evaluation of Concrete in Existing Massive Structures for Service Conditions. American Concrete Institute, ACI Committee 201, 1979.

Safety Evaluation of Existing Dams, A Water Resources Technical Publication. U.S. Department of the Interior, Bureau of Reclamation, Revised Reprint, 1983.

Safety of Existing Dams - Evaluation and Improvement. National Research Council, National Academy Press, 1983.

Safety of Small Dams. American Society of Civil Engineers, August 1974.

Suggested Procedures for Safety Inspection of Dams, Ohio Department of Natural Resources.