Interoperability
A Necessary Means Towards Operational Success in NATO

by

Major Michael W. Everett
Armor

School of Advanced Military Studies
U.S. Army Command and General Staff College
Fort Leavenworth, Kansas

5 May 1987

Approved for public release; distribution is unlimited.

87-3038

School of Advanced Military Studies
Monograph Approval

Name of Student: Michael W. Everett, Armor

Title of Monograph: Interoperability: A Necessary Means Towards Operational Success in NATO

Approved by:

Larry Izzo
_____ Monograph Director
(LTC. Lawrence L. Izzo, M.S.N.E.)

Richard Hart Sinnreich
_____ Director, School of Advanced Military Studies
(Col. Richard Hart Sinnreich, MA)

Philip J. Brookes
_____ Director, Graduate Degree Programs
(Philip J. Brookes, Ph.D.)

Accepted this 10th day of May 1987.

APPROVED FOR PUBLIC RELEASE:
DISTRIBUTION UNLIMITED.

ABSTRACT

INTEROPERABILITY: A NECESSARY MEANS TOWARDS OPERATIONAL SUCCESS IN NATO, by Major Michael W. Everett, USA, 57 pages.

Interoperability is the ability of services and allies to commingle systems, units, or forces which will enable them to operate effectively together. Interoperability should provide NATO commanders the necessary flexibility to concentrate sufficient combat forces at decisive points on the battlefield to deceive and surprise the THREAT while seizing the initiative. The corps seems to be the unit best organized to plan and execute an interoperable operation in NATO because the corps links tactical operations and strategic aims and is flexible enough to performs missions at the tactical and operational levels.

This study uses a historical analysis of German Army operations in North Africa and on the eastern front during World War II. These operations are indicative of the successes and failures of interoperable operations amongst Germany and her allies. NATO operational commanders must seek certain imperatives of interoperability at the operational level to be successful. These imperatives are: (1) harmonious unit organization, (2) standardized equipment and training, (3) compatible tactical doctrine, (4) unified command, control, communications, and information systems, (5) coordinated liaison and staff planning, (6) mutual understanding/simplicity, (7) cooperation, and (8) adequate sustainment and logistics. The study also examines the characteristics and capabilities of US and German modernized heavy corps to assess the feasibility of establishing an ad hoc US/German corps.

The conclusion of this study indicates the need to practice interoperability at the operational level. Without interoperability, the practice of operational art is inhibited. Escalation across the nuclear threshold because of the inability of NATO operational commanders to achieve the conventional initiative is a dilemma that NATO policy makers must address if national interests continue to impede efforts towards more effective interoperability.

Table of Contents

Page

Section: I. Introduction: The Strategic/Operational Setting in NATO....1

Interoperability....6

II. Estimate of the NATO Battlefield....8

III. German Interoperability in World War II....12

IV. Imperatives of Interoperability at the Operational Level....24

V. Characteristics and Capabilities of the US and German Modernized Heavy Corps....29

VI. Feasibility of the US/German Interoperable Ad Hoc Corps....32

VII. Conclusion....36

MAPS:

1. The Strategic Setting in NATO....8a
2. Warsaw Pact Options....9a
3. NATO at D + 8-12....10a
4. Rommel's Thrust into Cyrenaica, April 1941....13a
5. Deployment of the Interoperable Groups....14a
6. The Middle Don Front, November 1942....20b
7. The Stalingrad Front, November 1942....20c
8. The Stalingrad Encirclement....21a
9. Operation Little Saturn at Stalingrad: The Decisive Battle....21b
10. The Battle of the Donetz....22a
11. NATO Counterstrike Options....34a

Figures:

1. Panzer Army Afrika, March 1941....13b
2. Interoperable Groups, 3 April 1941....13b
3. Order of Battle, Army Group South August 1941....17a

Figures (Continued):

4. Order of Battle, Army Group B November 1942.....20a

5. Command and Staff Responsibilities.....24a

6. US and German Armored and Mech Vehicle Characteristics versus Soviet Armor.....30a

7. Factors Militating Against Interoperability.....36a

Appendices:

1. Type Forward Deployed Corps.....39

2. German Corps.....40

3. US Armored Division (J-Series).....41

4. US Mechanized Division (J-Series).....42

5. German Armor Division.....43

6. German Panzer Brigade.....44

7. German PanzerGrenadier Brigade.....45

Endnotes.....46

Bibliography.....49

INTRODUCTION

THE STRATEGIC/OPERATIONAL SETTING IN NATO

The NATO strategic concept of 'flexible response' and its operational complement of 'forward defense' evolved in December 1967 after many years of debate. This strategic and operational framework is designed to support NATO's political aim of maintaining the status quo by preserving the independence and territorial integrity of its sixteen member nations. It is not intended to threaten the sovereignty of another nation. Its primary purpose is to prevent a conflict with the Warsaw Pact through deterrence. Flexible response as a strategy has a twofold aim: "...to prevent the potential opponent from employing any of his weapons, either in a political or military sense, and secondly, to convince a potential aggressor that an attack on any NATO partner, by whatever means, would face him with an unacceptably high risk for his own territory."[1] This strategy combines the gradual escalation of conventional forces with tactical and strategic nuclear weapons to achieve its aims.

If the strategic/political aim of NATO is 'flexible', then flexible ways and means at the operational level should be considered. Critics of the adopted NATO operational concept of 'forward defense' argue the concept lacks sufficient flexibility because: (1) all forces are pushed towards the east-west European boundaries with minimal reserves, (2) it does not allow sufficient maneuver to maintain an adequate conventional advantage and, (3) it strongly endorses and supports the interests of the West German government at the economic and military

expense of the other member nations.

Forward defense is an often misunderstood concept. It comes from the German term Vorneverteidigung which to the West German means,

> "...if at all possible , not to let the attacking enemy into West German territory, not to give him a chance to capture bargaining chips; to wrestle from his attack the necessary speed right at the beginning, to deny his soldiers courage and hope. FD means not to give up one third of the population of West Germany and one quarter of its industrial potential in a 100 Km strip west of the border to the Warsaw Pact...FD means the quick change between delay, defense and surprise counter attack...This presupposes a common understanding of FD among eight different nations and nine corps. It demands of leaders/commanders at all levels the capability to practice interoperability and intensive cooperation with the allied neighbor...FD necessitates that the Western Alliance fight superior enemy reserves on their approach march in the depth of the enemy territory with far reaching and accurate conventional weapons. It also means delaying the arrival of enemy reinforcements at the FEBA with aimed strikes at least to the point where one's own operational reserves are available for the FD." 2

Viewing forward defense in the above context, NATO adopted the concept for the following reasons:

* In a crisis it provides NATO with several alternatives in reaction to any of these three THREAT offensive options:

  a. Extensive preparations and planning to conduct a full strength attack into western Europe;

  b. A strategic surprise attack launched with extensive planning and no preparation, and

  c. An attack combining surprise and overwhelming conventional strength following very little preparations. 3

* "It prevents the leadership of the Warsaw Pact from contemplating 'quick and limited grabs' while raising the expected costs and unsettling uncertainties involved in a major aggression." 4

* "It can force the Soviets to undertake a host of mobilization and reinforcing measures which give NATO the opportunity to strengthen the pre-conflict density and depth of its own conventional ground forces and redeploy sufficient assets to redress the aerial imbalance." 5

* It can force Warsaw Pact Forces into attack postures which slow their offensive momentum, increase their vulnerabil-

ity to air interdiction, and make them violate their own requirements for dispersal against anticipated nuclear use." 6

* "It reinforces the nuclear deterrent by ensuring its survival during conventional conflict, by presenting Warsaw Pact ground and air targets for nuclear strike, and by giving NATO decisionmakers time to deliberate the course of Deliberate Escalation." 7

* Presently any other form of defense is unacceptable to the West German people and government.

* The terrain and lack of operational depth in West Germany almost negates any other form of defense. 40% of the German territory is either forests, villages, towns or industrial conurbations. Because of the climate and rolling nature of much of the terrain 50% consists of areas with limited visibility. "An investigation by the Bundeswehr's geographical department, based merely on ground type (not even taking account of contours), resulted in the following sighting ranges:
  1. 6% more than 2,500m,
  2. 10% over 2,000m,
  3. 17% over 1,500m,
  4. 45% over 500m, and
  5. 55% less than 500m." 8

A further explanation for forward defense involves the historical influence of the German Army experience on the eastern front in World War II. The Soviet capability of conducting multi-FRONT attacks makes it extremely difficult, if not impossible, to identify the main attack once hostilities begin. The Soviet Army executed this operational art extremely well after 1942. West Germany, however, is not the plains and steppes of Russia and eastern Poland. Withholding sizeable reserves at the expense of a weakened frontline may result in multiple penetrations that can be exploited simultaneously. Reserve forces may not be able to react to all penetrations, nor rapidly enough to contain the main penetration. Consequently the forward defense concept advocates a strong frontline capable of containing a Soviet offensive well within the first 100 kilometers of the International German Boundary.

Lastly, the operational concept of forward defense is the consensus doctrine of NATO and will remain the operational concept for NATO in the foreseeable future. Ongoing debates on its relative merits will continue. It is a viable option if sufficient conventional forces are available to provide adequate defensive force ratios to counter the Warsaw Pact. Presently, NATO lacks sufficient conventional forces to guarantee forward defense is a viable option. The risks and uncertainties involved raise doubts and cause military analysts some discomfort. However, at the operational level risk and uncertainty must be accepted in peace and in war. In war NATO commanders must be allowed to seize the initiative and conduct unexpected counterstrikes. "But such a situation will be possible only if (1) the NATO high command is willing to unleash commanders by giving them mission-type orders, (2) commanders have the inner confidence, independence, and initiative to undertake bold and risky battles of decision, and (3) the troops possess both combat spirit and zeal in defense of their way of life."[9]

Ideally NATO commanders should develop and adopt common tactical and operational doctrines that will meet the three criteria listed above. Since doctrine is based on cultural and societal concepts, norms, and mores, it is difficult to adopt a universally acceptable doctrine within a multinational alliance. Furthermore it must be understood two factors will always remain constant in NATO; decisions will be reached by consensus of the membership, and peacetime military matters and considerations will be subordinated to economic and political matters. Essentially "coalition consensual objectives in peacetime relate

to deterrence, the economic well-being of the constituent nations, and relations with potentially opposing nations/alliances, rather than strictly military logic."[10]

The US Army officially adopted AirLand Battle doctrine in 1982. Initially the doctrine was mistaken as a replacement for forward defense. With its tactical and operational implications, the doctrine was looked upon as being too elastic, trading valuable and cherished West German territory (space) to gain time, wear down the enemy, and set the preconditions for counteroffensive and/or escalatory nuclear operations into eastern Europe. Recalling the German forward defense concept and NATO's strategy of 'flexible response', it is not difficult to empathize with the misunderstanding of NATO allies towards AirLand Battle doctrine and the intent of the US.

The former doctrine of active defense was acceptable because the initial phases of the defense was completely compatible with forward defense. The doctrine was passive in nature with negative aims throughout its execution. Clausewitz teaches "...a defensive campaign can be fought with offensive battles, and in a defensive battle, we can deploy our divisions offensively. Even in a defensive position awaiting the enemy assault, our bullets take the offensive. So the defensive form of war is not a simple shield, but a shield made up of well-directed blows."[11] Currently the more assertive AirLand Battle doctrine encourages commanders to plan and execute 'well-directed blows' throughout the depths of the modern battlefield. The doctrine is somewhat acceptable to NATO and more specifically, West Germany, as long as it is tailored to NATO doctrine and executed close to the IGB. The

four tenets (initiative, agility, synchronization and depth) and ten imperatives of AirLand Battle doctrine provide US commanders the necessary flexibility to apply this doctrine alongside their NATO allies.[12] To further accomplish this end, innovative interoperable ways and means must be developed amongst the NATO allies.

INTEROPERABILITY

Interoperability is "...the ability of systems, units, or forces to provide services to and accept services from other systems, units or forces and to use the services so exchanged to enable them to operate effectively together."[13] In essence interoperability should provide NATO commanders the flexibility needed to commingle allied systems and units. By doing so the agility needed to surprise and wrest the initiative from the enemy can be attained by conducting limited counterstrike operations. The most significant hindrances to interoperability at the operational level are the two constant factors of the alliance mentioned earlier- decision by consensus and military logic subordinated to political/economic considerations.

The unit best organized to handle an interoperable operation in Europe is the corps. It not only provides the link between tactical operations and strategic aims, but is flexible enough to operate at both the tactical and operational levels. Because of its organizational structure "...the corps is the level for synchronization of ground, air, and naval fires which are essential to any actions directed at seizing the initiative on the battlefield."[14] The successful defense of western Europe depends on the ability of NATO corps and their supporting air to defeat opposing

Combined Arms Armies rapidly and maneuver to the most vulnerable sector(s) of a Soviet Front. NATO army group commanders must have the confidence of organizing allied corps size units, expeditiously, to maintain the operational advantage once the preconditions for offensive action are established.

The purposes of this study are to: 1) examine the need for interoperability at the operational level, 2) consider measures to improve interoperability, and 3) estimate the feasibility of forming an ad hoc US/German corps to seize the initiative by taking advantage of an operational window of opportunity. The study will conjecture the conventional NATO battlefield after the first 8-10 days of fighting but prior to nuclear escalation. Axis allied operations will be scrutinized to show how interoperability is a necessity of modern coalition warfare and to demonstrate how success and failure is attained when it is wisely or poorly implemented. Eight imperatives of interoperability are cited which could enhance the effectiveness of interoperability between US and German forces within NATO. The scope of the study is limited to US/German heavy corps and division capabilities. It is not meant to suggest any impracticalities of forming interoperable corps with or amongst other NATO allies when indeed the necessity for doing has been recognized. To study the armed forces of all sixteen nations of NATO would exceed the limitations of this paper. The study will conclude with thoughts on the merits of US/German interoperability and ways of using interoperability at the operational level.

ESTIMATE OF THE NATO BATTLEFIELD

To achieve the optimum correlation of forces to conduct an offensive into western Europe the Warsaw Pact needs time to mobilize sufficient forces to achieve a significant force advantage. Indications of this mobilization should provide sufficient warning for NATO to mobilize and deploy its forces along the border. In the event of an offensive into western Europe, NATO commanders must have a clear understanding of and tolerance for chaotic conditions. The array of Warsaw Pact forces versus NATO (Map 1) indicates a significant force advantage for the enemy. There are three FRONTS facing NATO's 600 kilometer multinational defense line of ten corps. The US and German corps are the only fully forward deployed corps. The others would need ample lead time to become fully deployed along the IGB. In a surprise attack scenario command and control of conventional operations would be very difficult. In quantitative numbers the enemy can employ over 50,000 tanks, 20,000 artillery pieces, 1500 surface-to-surface missile launchers, 4,000 antitank guns, and 6,500 assorted aircraft. Statistically, the force ratio advantages of the WP to NATO in these major weapon systems equates to "...2.65:1 for tanks; 2.05:1 for artillery; 3.45:1 for missile launchers;...4.5:1 (bombers), 1.4:1 (fighter bombers), 7.67:1 (fighters), 2.61:1 (interceptors)..."[15] Given these numbers the three most prevalent elements on the pre-war European battlefield will be: (1) target rich, (2) duo-dimensional (horizontal and vertical depth) in scope between ground and air operations and, (3) in a high state of flux and tension.

The enemy has the capability of conducting an offensive which would seek to strike rapidly to the depths of NATO's

Map 1. The Strategic Setting in NATO

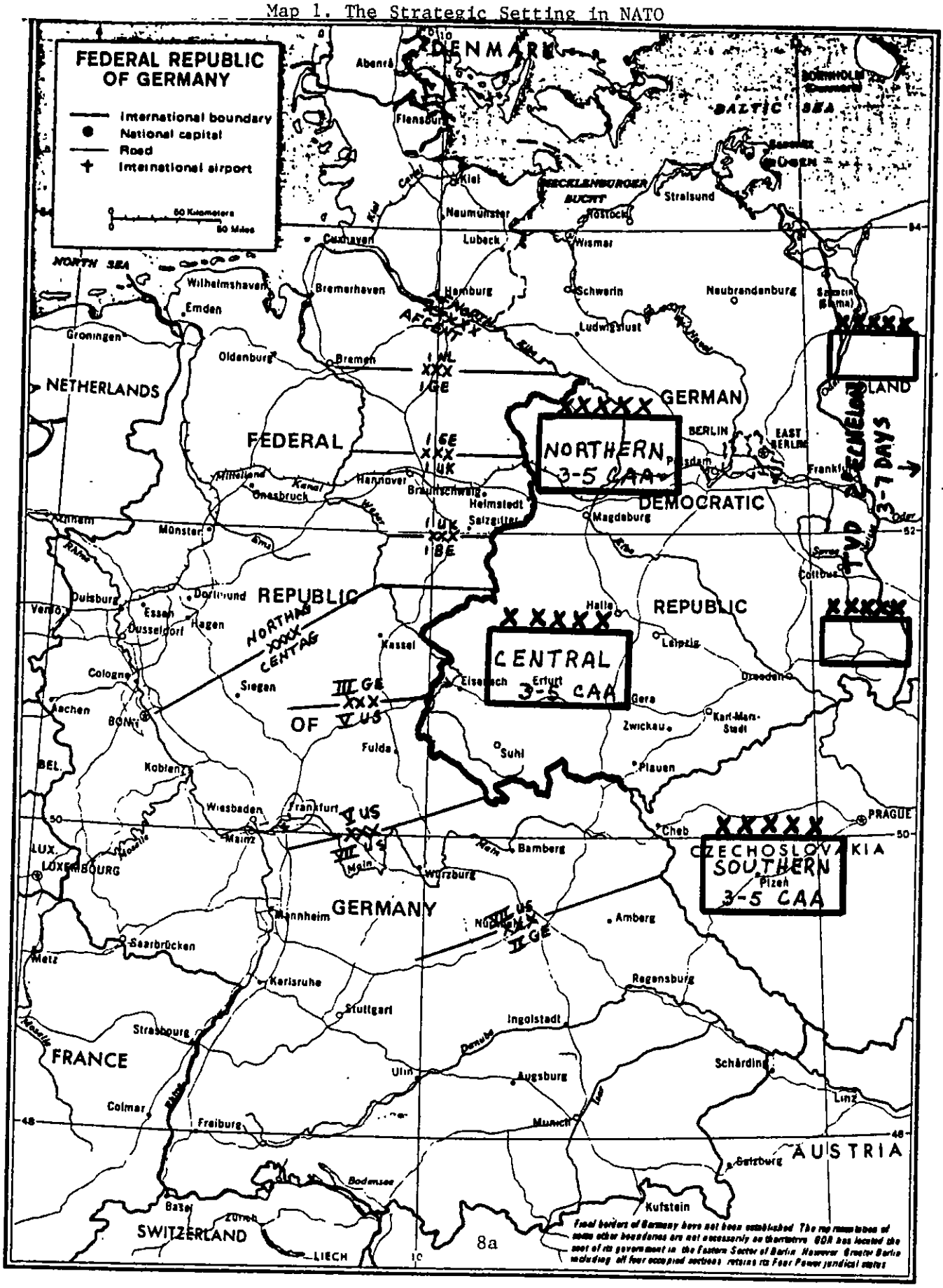

defenses to destroy the frontline corps, disrupt mobilization, and interdict the deployment of reserves. To accomplish these objectives, the WP would most likely attempt to force multiple penetrations, exploit the gaps that are created along the line, encircle the frontline units, and prevent the employment of reserve forces by threatening rear supply bases. The availability of three forward FRONTS in the first strategic echelon (Map 2) offers the Soviet TVD Commander innumerable options which pose several dilemmas for NATO operational commanders. Once hostilities begin "the European battlefield is considered to have four key elements: (a) Terrain and Weather are interwoven with distinct limits on visibility; (b), the 'battles' will be highly lethal, rapidly paced, and U.S./NATO forces will remain outnumbered as they now are; (c), the tank will remain the main battlefield threat and the key weapon in exploiting Soviet doctrines; and, (d) the Soviet 'threat' will contain high measures of surprise, mass momentum and continuous combat."[16]

The impact of weather and terrain not only affects visibility but cross-country mobility is seriously impaired during periods of inclement weather. Additionally, the bulk of the West German urban and industrial complexes lie within 100 kilometers of the border. "Like forests, cities restrict observation and movement, absorb large numbers of troops, and offer opportunities for cover and for surprising the enemy. Major routes that converge on cities represent significant obstacles that can be integrated into the defense."[17] The pace of operations and movement will be slowed but the tempo of engagements and battles may intensify since ground weapon systems will become road bound and massed for concentration. NATO frontline forces will be

Map 2. Warsaw Pact Options

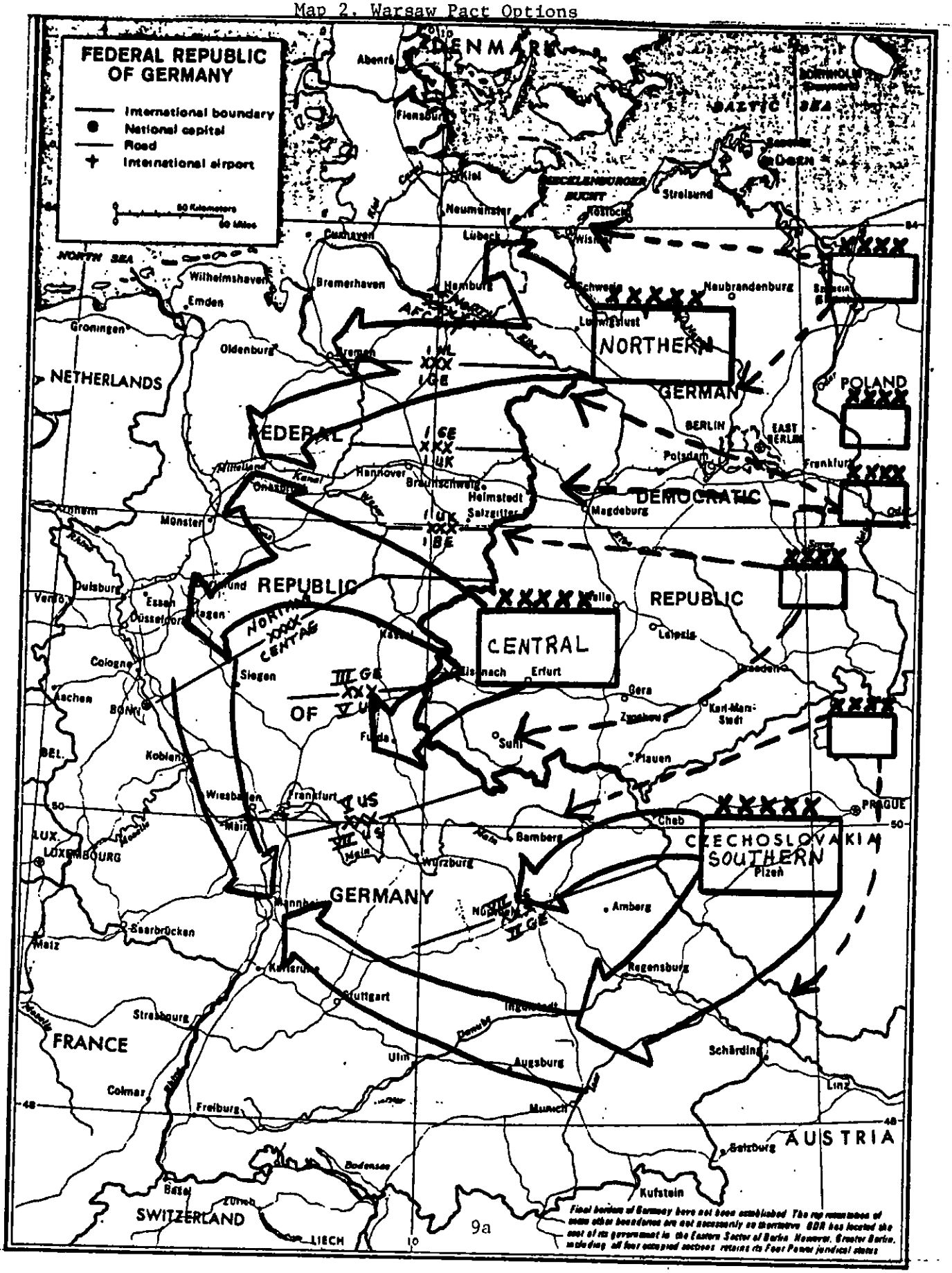

engulfed in a slugfest during the outset of war since the majority of weapon system engagements will be 1500 meters or less. Winning and losing will hinge upon the systems that fire first, accurately and more rapidly.

The sheer weight of enemy forces can eventually weaken a strong forward linear defense. The defenses may absorb the initial blows but continuous combat and subsequent blows with artillery and other indirect fire barrages will create weaknesses that can be exploited in two or more locations along the border. The initial positional defenses can gradually dissipate as the enemy attempts to encircle NATO forces. NATO corps must transition from positional defenses to area defenses. The agility of the corps to make the transition expeditiously can facilitate future counterstrike operations. By conducting area defenses corps commanders must accept Soviet forces in rear areas and be able to contain penetrations in their sectors by interdicting enemy lines of communications and troop control measures. The Warsaw Pact timetable must also be disrupted.

On the other hand, NATO operational commanders' abilities to synchronize operations are severely impeded by area defenses. The nature of the area defense battlefield at D+8-12 can have the following dimensions: (1) enemy forces can be in rear areas; (2) command and control (C2) will be difficult at best; (3) pockets of resistance can exist throughout the battlefield; (4) the most intense fighting will be conducted around the cities and urban areas; (5) some enemy elements will reach the Weser river in NORTHAG and the Main river in CENTAG; however, neither side will have absolute control of crossings along these rivers; (6) the first strategic echelon will lose its momentum prior to crossing

Map 3. NATO at D + 8-12

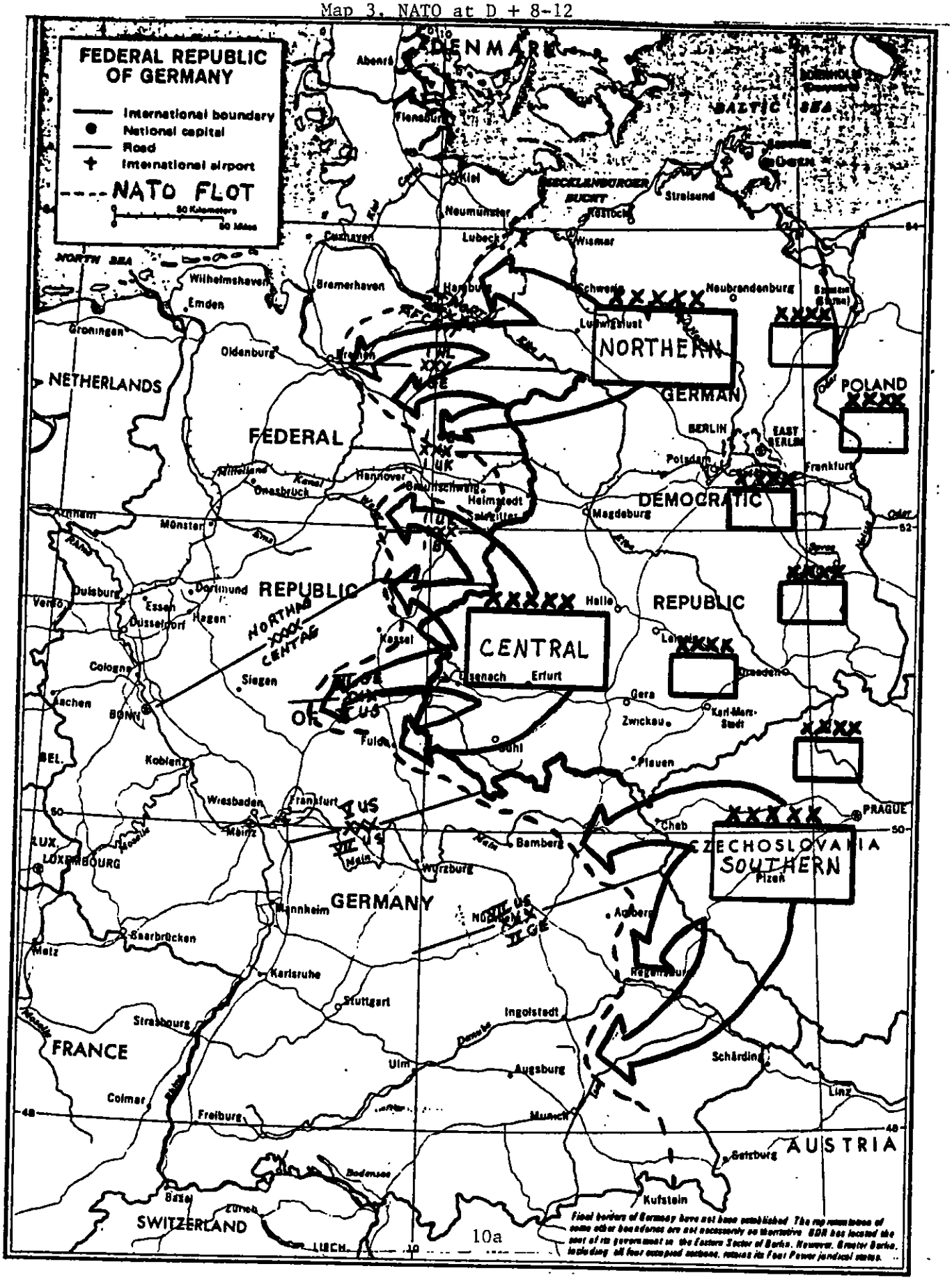

the Weser and Main rivers; and, (7) the operational and strategic reserve corps of NATO will not have closed completely within the theater of operations.(Map 3).

It is conceivable tactical and operational windows of opportunity will become available during this period. These windows of opportunity are intuitively or instinctively forecasted by the operational commander. Enemy forces become vulnerable to surprise division or corps level counterstrikes which seek to achieve several small advantages to achieve the cumulative effect of a larger advantage. By doing so, these actions can unhinge the enemy offensive, stall the his timetable, induce his forces to lose confidence in their capabilities, and assist NATO operational commanders to seize the initiative. NATO operational commanders may have to organize ad hoc interoperable corps to initiate these counterstrike operations. In other words if a reserve corps headquarters arrives in theater with two or three divisions, then it may be necessary to attach one or two allied divisions on a temporary basis to conduct limited offensive operations. Another consideration may be the possibility of attaching one or two US divisions to an allied corps to conduct limited operations. The key is "limited" because of the problems associated with interoperability which will be discussed later.

US and German forces have conducted interoperable exercises at the tactical level for many years. Operational interoperability exercises have been limited. The German Army practiced interoperability in World War II primarily through trial and error. Lessons learned from those experiences can be applied today at the operational level.

GERMAN INTEROPERABILITY IN WORLD WAR II

By the winter of 1940 the Italian Army had suffered a succession of humiliating defeats at the hands of General Richard O'Connor's Thirteenth British Corps. The Italians were driven from the western frontiers of Egypt through Maramarica and the Cyrenaica peninsula.[18] On 11 January 1941 Hitler decided to send forces to North Africa to assist the Italians in halting the British advance. Hitler sent Erwin Rommel to organize a defense and establish an effective fighting force to assist the Italian government in regaining lost territories in North Africa. From the beginning the basic character differences between the Germans and Italians were manifested. Rommel recognized several flaws within the Italian Army system.

> "From the highest level down to that of junior commanders the structure was defective. The whole system of messing was completely wrong and the Germans were astonished at the disparity in ration scales between the Italian commissioned ranks and the men they led. The officers ate first and best; the men last, badly, and sometimes not at all...The comradeship of danger shared was missing; a sense of purpose was absent. The Italian Army lacked spirit and with the defeat by Wavell only weeks before the first German troops found the morale of their allies to be dangerously low...Whereas it was common in the German Army for commanders to be well forward leading their men, Italian leaders seldom left their headquarters and thus had no direct and immediate influences upon the course of a battle...The organisation of the supply system showed many defects and the whole edifice was predicated on the assumption that war in the desert would be a static campaign, although no effort had been made to erect proper and permanent defenses." [19]

Despite other deficiencies in training, equipment, and communications, Rommel realized he needed the Italian units to decisively defeat the newly established British Cyrenaica Command.[20] He sought to strengthen and raise the morale of the Italian Army

by implementing integration techniques of gradually mixing German and Italian units. In addition he strengthened Italian units by attaching small German combat groups and teams known as korsett stangen (corset stays). These combat teams were designed to: (1) integrate the superior German weapon systems with the inferior Italian tanks and antitank guns; (2) provide training and experience in mobile warfare to the Italian units; and, (3) derive the maximum effort from the Italians to endure the hardships of desert warfare. His frequent visits to Italian units and display of genuine concern eventually led Italian soldiers to believe and trust Rommel more than their own leaders.

From the day he arrived Rommel's personality dominated the North African campaigns. He learned "the course of the desert war was marked by short but intense bursts of furious activity followed by longer periods which the winning side consolidated its gains and built up its strength for a further advance while the losing army constructed defence lines and brought up fresh supplies of men and material to replace the losses which had been suffered."[21] Recognizing an operational opportunity after taking El Agheila on 21 March 1941, Rommel launched his counteroffensive North African campaign on 31 March 1941.(Map 4). This action caught the British Army completely by surprise since their intelligence indicated no Axis counteroffensive would be conducted until the arrival of the 5th Panzer Division in mid April- early May. Rommel was not suppose to have the strength to conduct an offensive campaign in March. Since Army Afrika was organizing and being acclimated to the desert at that time (Figure 1),

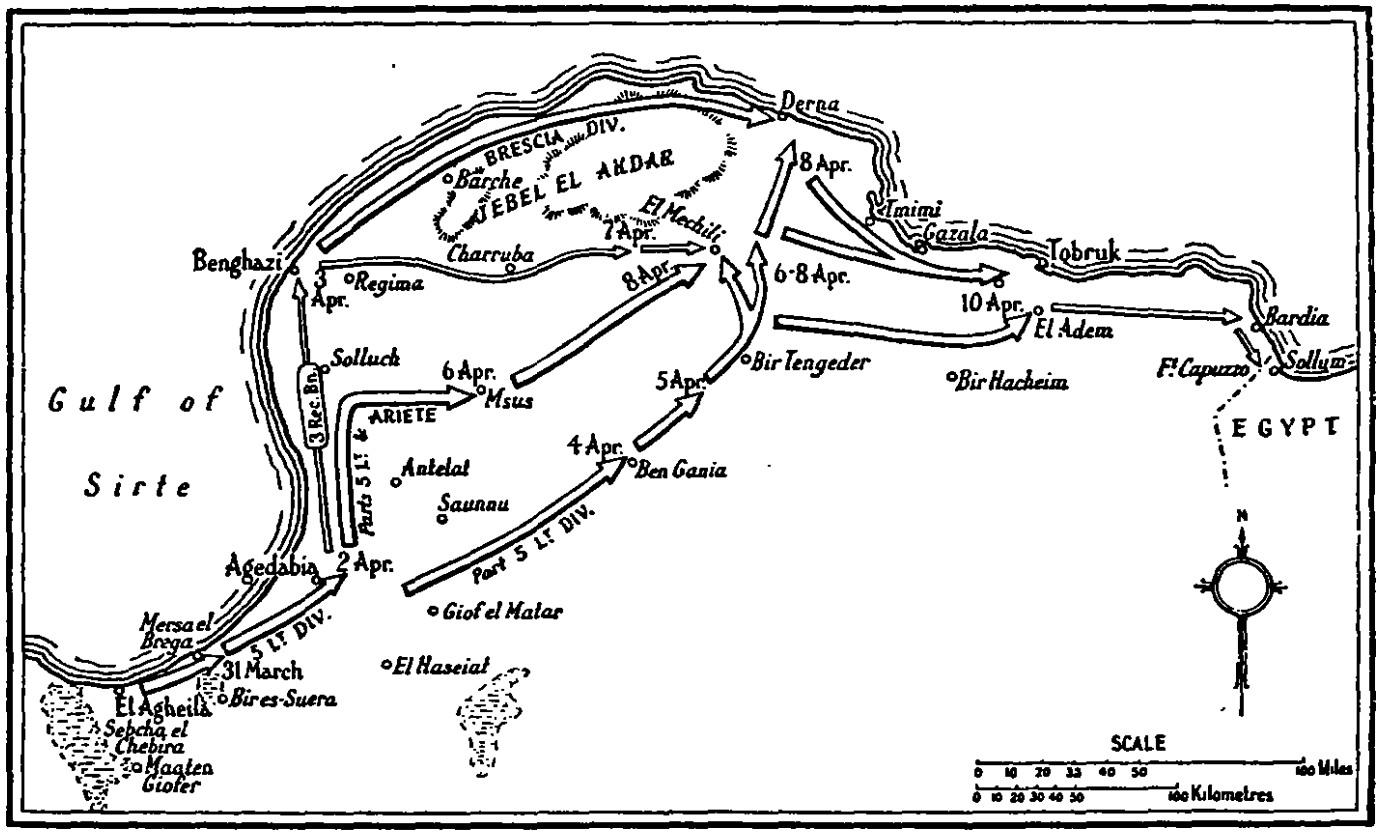

8. THE THRUST INTO CYRENAICA, APRIL 1941

Map 4.

PANZER ARMY AFRIKA--MARCH 1941

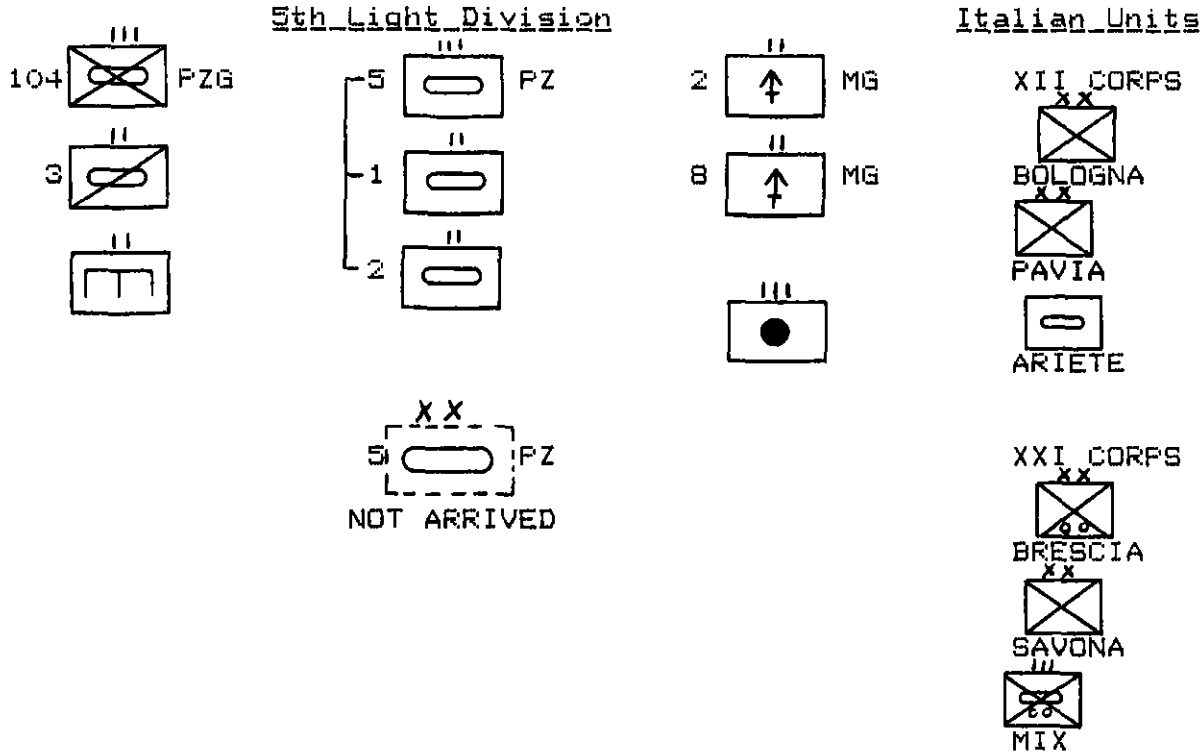

Figure 1.

INTEROPERABLE GROUPS-- 3 APRIL 41

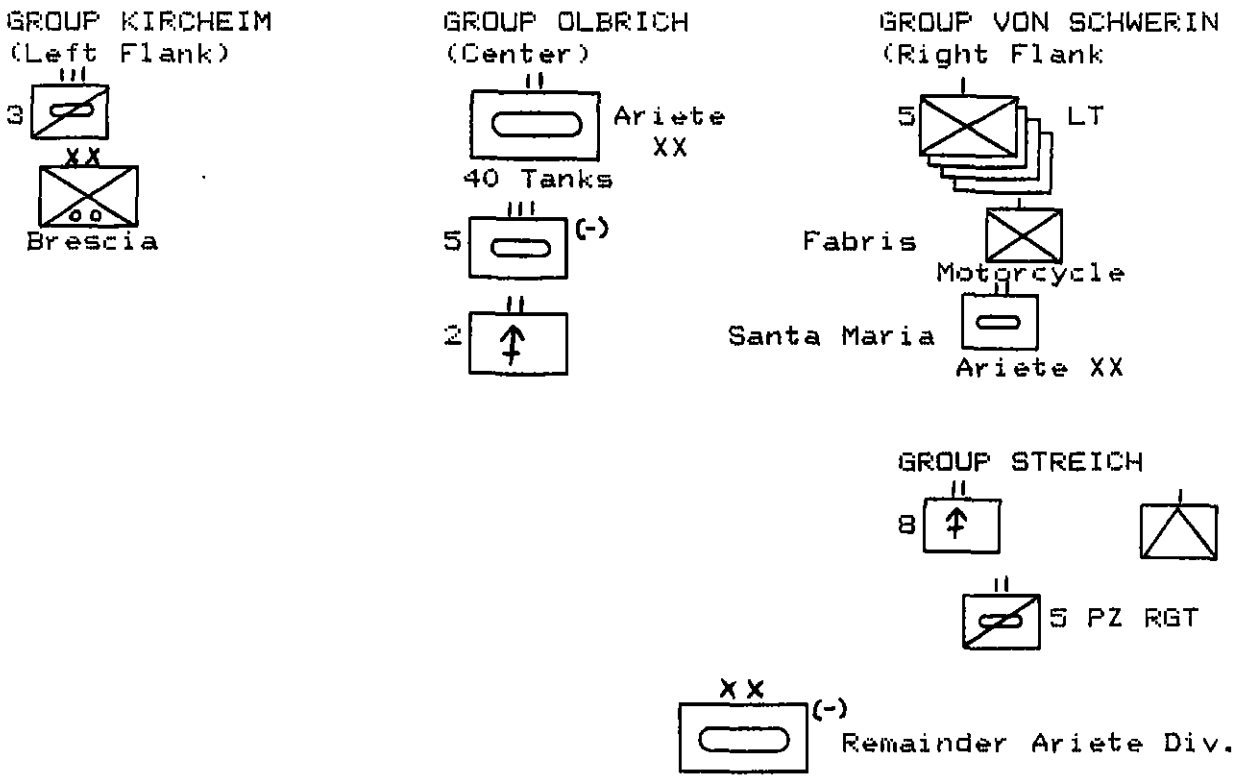

Figure 2.

Rommel's original intent was to conduct a raid into Cyrenaica. However he saw the opportunity to attack through Mersa el Brega and pursue the British back to the Suez Canal.

The main defensive line of the British extended from the Mediterranean Sea through the heights of Mersa el Brega southeast to Bir es Sierra. The 8th Machine Gun Battalion penetrated the right flank of the British defense and headed north toward Agedabia. Mersa el Brega fell on 311730 March 41. The pursuit continued the next day until Agedabia fell on 2 April. Refuel resupply operations were conducted on 2 April while the Italian forces were given time to close. Rommel then designed a bold offensive plan. The British expected him to continue his strike along the coastal roads and prepared their defenses accordingly. Rommel divided his forces into four interoperable groups (later five) to attack along the coastal road and across the desert on three (later four) converging axes toward Mechili.(Figure 2). The plan was designed to pin and destroy British forces before they could withdraw to the fortress of Tobruk.(Map 5).

The left flank force was under the command of Major General Kircheim. His forces consisted of the 3d Reconnaissance Battallion followed by the Italian Brescia Infantry Division. His mission was to pressure the coastal defenses and protect the left flank of the main attack. Eventually, it divided into the northern and southern Brescia columns once it reached the Jebel el Akhar hills.(Map 4).

Colonel Herbert Olbrich, commander of the 5th Panzer Regiment, controlled the center force. His forces included the 5th Panzer Regiment (minus some detachments), 40 Italian tanks from

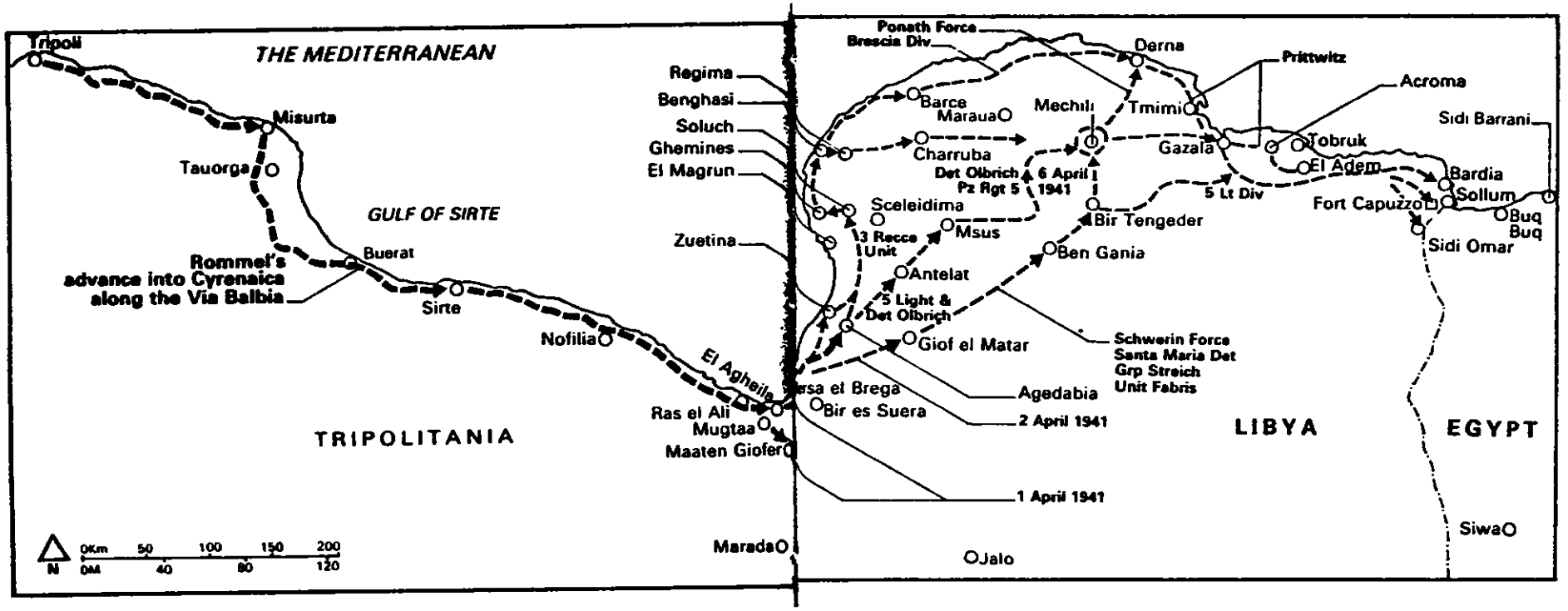

Map 5. Deployment of the Interoperable Groups [23]

the Ariete Division, the 2d Machine Gun Battalion and supporting artillery and engineer units. His mission was to attack Msus via Soluch.

The right flank consisted of two groups. The first under Colonel von Schwerin consisted of the Fabris Motorcycle Battalion, Santa Maria Armor Battalion, motorized infantry detachments from the 5th Light Division and other sundry support units. His mission was to advance to Ben Gania and eventually Timimi. Major General Streich commanded the second group composed of the 8th Machine Gen Battalion, an antitank company and a squadron of tanks from the 5th Panzer Regiment. His mission was to follow Group von Schwerin to attack Mechili. The remainder of the Ariete Division was tasked to follow Group Streich to Bir Tengender, join the fight at Mechili or cut across to El Adem or Tobruk.

On 3 April the 3d Reconnaissance Battalion captured Benghazi. French troops garrisoned at Msus panicked prematurely and destroyed the petroleum dumps at Msus on 4 April. The bulk of the British 3rd Armoured Brigade was left without fuel. The brigade initially had 22 cruiser and 25 light tanks. By the afternoon of 4 April the brigade was down to 9 cruiser and 21 light tanks. By nightfall on 5 April 10 tanks remained. Ben Gania fell on 4 April and El Mechili was under siege on 7 April by Group von Schwerin. The remnants of the 2d Armoured Division were trapped in Mechili by the 104th Panzer Grenadier Regiment and the panzer squadron from Group Streich. Group Olbrich arrived the afternoon of 8 April following the capitulation of Mechili earlier that day. Group von Schwerin raced to Derna to

link up with the northern prong of the Brescia Division. In doing so almost the entire British Cyrenaica Command staff, including Generals P. Neame and O'Connor, was captured by the 8th Machine Gun Battalion and motorcycle troops.

To the shock of the western world, the re-conquest of Cyrenaica was now accomplished. The British were in full retreat with Rommel at their heels. The 9th Australian Division and remnants of the Cyrenaica Command held Tobruk after massive assaults by German and Italian forces. Still Rommel was able to push the British back through the Halfaya Pass and hold Sollum and Ft. Capuzzo by 28 April. By the end of June the desert campaign for both sides settled into a six month period in which the British regrouped and the Afrika Corps consolidated gains. Tobruk remained in British hands and Rommel successfully defeated two British counterattack attempts--Operations Brevity (mid May) and Battleaxe (15-18 June).

One of the advantages of interoperable warfare is the ability to disguise one's actual strength. The British were thoroughly deceived as to the real strength of Italo-German forces in March 1941. They completely underestimated the agility and assertiveness of Rommel, a master of mobile warfare, to train and organize an effective interoperable force in a short period of time. They also lost sight of the fact that "...mobile war is a game of nerves won by he who understands the risks, together with certain fundamental rules. One of those rules is that, though the relative quality of equipment contains important values, its handling transcends all."[24] The integration of German and Italian combat units contributed immeasurably to the successes of the

Afrika Korps in the spring of 1941. The character of Erwin Rommel helped bridge the gaps in training, equipment, signal communications and close air support. In the short term interoperability worked well for the Axis allies in North Africa. Still the Italians never fully accepted German doctrine, training and discipline. Consequently this disunity eroded Italo-German cohesiveness and eventually contributed to the Axis defeat in 1943.

Axis interoperability on the eastern front was somewhat more elaborate and complex than North Africa because several Axis allies were involved. They experienced good success in the 1941-42 offensives, but quickly disintegrated in late 1942-44. The principal partners of the Axis alliance on the eastern front were Germany, Hungary, Rumania and Italy. The lesser partners were Bulgaria, Croatia, and Slovakia.(Figure 3). Axis allied commanders were unable to perform effectively primarily because of inadequate training, substandard equipment and logistical support. The two pragmatic means adopted by German commanders to alleviate these problems were: (1) the employment of an extensive liaison system, and (2) the use of "corset stays." The German liaison officer had to possess three essential qualities-- tact, military skill, and adequate knowledge of the language and national character of the forces to which he was assigned. A typical liaison arrangement would look as follows:

"a. Field Army
General Officer- 1(equivalent to Corps Commander/Field Army Chief of Staff in rank)

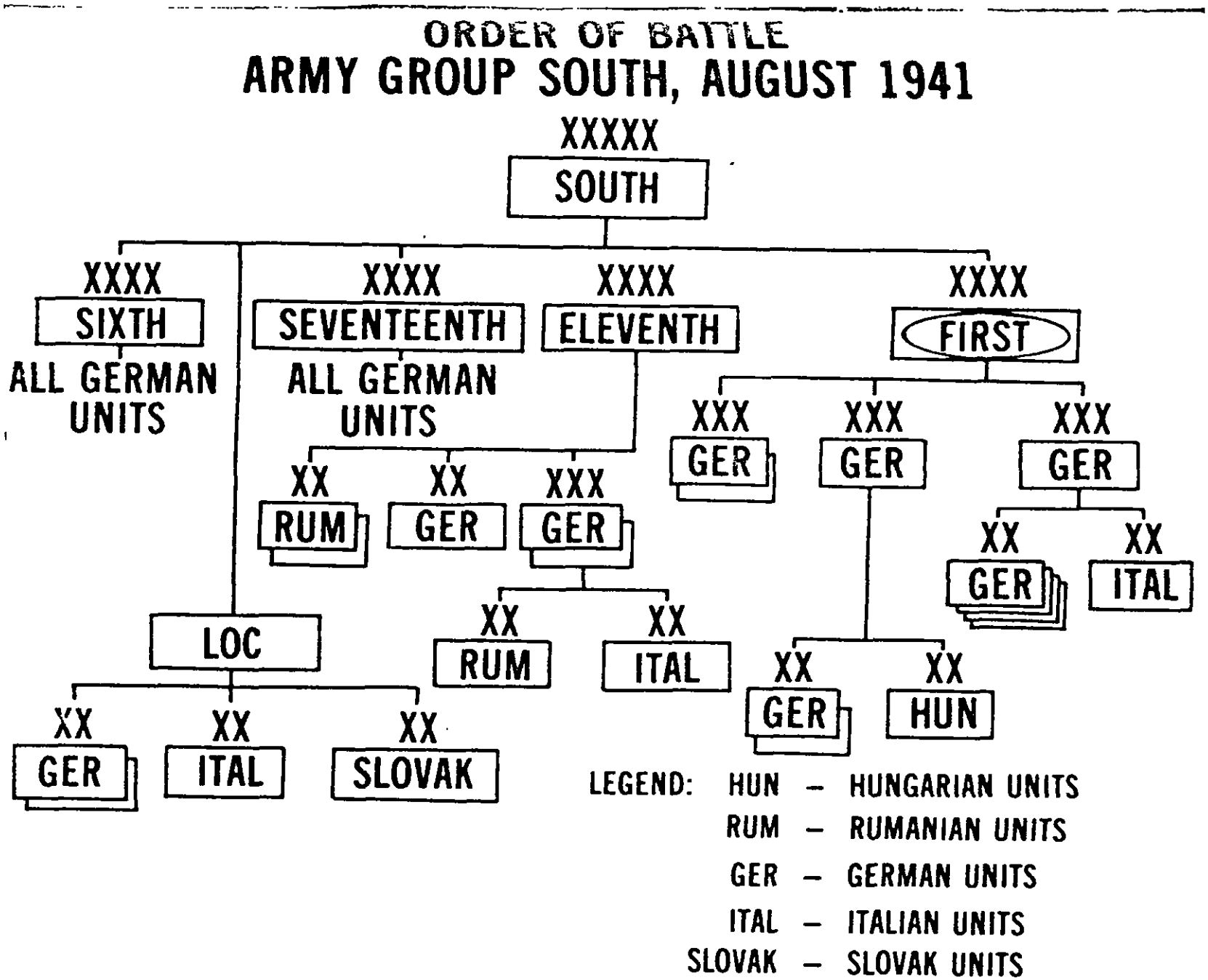
ORDER OF BATTLE
ARMY GROUP SOUTH, AUGUST 1941
XXXXX
SOUTH
XXXX
SIXTH
ALL GERMAN UNITS
XXXX
SEVENTEENTH
ALL GERMAN UNITS
XXXX
ELEVENTH
XXXX
FIRST
XX
RUM
XX
GER
XXX
GER
XXX
GER
XXX
GER
XXX
GER
XX
GER
XX
ITAL
LOC
XX
RUM
XX
ITAL
XX
GER
XX
HUN
XX
GER
XX
ITAL
XX
SLOVAK
LEGEND: HUN – HUNGARIAN UNITS
RUM – RUMANIAN UNITS
GER – GERMAN UNITS
ITAL – ITALIAN UNITS
SLOVAK – SLOVAK UNITS

Figure 3.[25]

Operations Officer- 1(Colonel, General Staff Corps)
Special Staff Officers- as required for Signal, Artillery, Combat Engineers, and Antitank Defense, each with a small staff.
Necessary signal troops

b. Army Corps
Liaison Officer- 1(General Staff Corps)
Translator/Interpreter-2
Intelligence Officer- 1
Intelligence Troops- 1
Clerks- 2
Driver- 1
Signal Troops- 2-8

c. Division
Liaison officer- 1(Captain)
Translator/Interpreter- 1
Driver- 1" 26

Additional liaison teams were employed during defensive battles and in the winter positions of 1942-43. German "corset stay" units were normally held in reserve positions to take advantage of their organization, armament and mobility. These units could rapidly intervene on the front if an allied position was in danger of collapsing.

Rumania was drawn toward the Axis alliance because her sovereignty was threatened by the Soviet Union. General Antonescu recognized the need for close relations with the German Army and subordinated Rumanian interests to those of the alliance. The most significant obstacles to Rumanian-German effectiveness were differences regarding equipment, training, organization, tactical concepts and the command system. Because of the following circumstances German practices and procedures were not attained:

"1. To reorganize an army from top to bottom required more time than was available...The reorganization had to be carried out in the midst of political upheaval which at times threatened the authority of the state.

2. The Rumanian army had been trained along French lines... Resistance to German influence in training went so far that

many Rumanian commanders of field units 're-schooled' officers and soldiers returning from German training courses.

3...it is not easy to effect a change in established ideas...The views and attitudes of the officer corps were, of course, of primary importance, and in the Rumanian army they were generally such that there was little hope of increasing the aggressiveness of the troops to any appreciable extent.

4. The material strengthening of the Rumanian forces had to be limited, since the demands of the Wehrmacht prevented the German armament industry from making large shipments to Rumania...Consequently, much of the training failed to yield results at the precise moment when the lessons were put to test in the field." 27

Hungary was practically coerced into the alliance but saw an opportunity to regain lost territories occupied by Rumania and Slovakia. Since Hungary's political aims were diametrically opposed to German interests, the collaboration between the two countries was adversely influenced. In addition the same obstacles to collaboration existed as with the Rumanians. Collaboration was facilitated with the older Hungarian officers who were familiar with the German methods of warfare from the time of the Austro-Hungarian Empire. German use of liaison teams gradually increased through 1944 and eventually close supervision and control was exercise through 1945.

The problems with the Italian Army were amplified in the North African theater. Like her other counterparts the Italian Army was never amalgamated, showed no inclination towards combined arms training, signal and communications discipline, and in many respects its modernization remained behind the German Army.

By the fall of 1942 casualties and manpower shortages degraded the liaison and "corset stay" systems. Alternative

means to reinforce and sustain weaker allied formations were negligible. Eventually the Rumanian, Hungarian, and Italian armies were tasked to conduct interoperable operations and hold critical flanks along the Stalingrad salient.(Figure 4). It was against these armies that Stalin chose to conduct Uranus, Little Saturn Plan, and the Ostrogozh-Rossosh operations to destroy the Rumanian, Italian, and Hungarian armies respectively. These operations involved penetrations and exploitations to form encirclements of German armies.

The first Soviet counterstrike was planned for November 1942. In the summer of 1942 Hitler split his efforts between the Caucasus and Stalingrad which left his armies defending a front in excess of 1,200 miles.(Map 6) This operational window of opportunity presented to Stalin would not be wasted. The disposition of German Army Group B was an overextended linear positional defense which began north of Voronezh and stretched to the Volga river just south of Stalingrad. The 2d German, 2d Hungarian, 8th Italian, 3d Rumanian, 6th German, 4th Panzer, and 4th Rumanian were positioned from north to south respectively.(Map 7). The 6th German and 4th Panzer Armies were concentrated in and around Stalingrad while the flank security was left to the allied armies and the weak 2d German Army. "There was no second line, no reserves to speak of...The reserve units of Army Group B, consisting of one Rumanian and two German armored divisions, intervened too late, having been stationed too far from the scene of action;.."[29] Five Soviet FRONTS opposed Army Group B--the Voronezh, Southwestern, DON, Stalingrad and Southern displaced north to south respectively.

ORDER OF BATTLE
ARMY GROUP B, NOVEMBER 1942

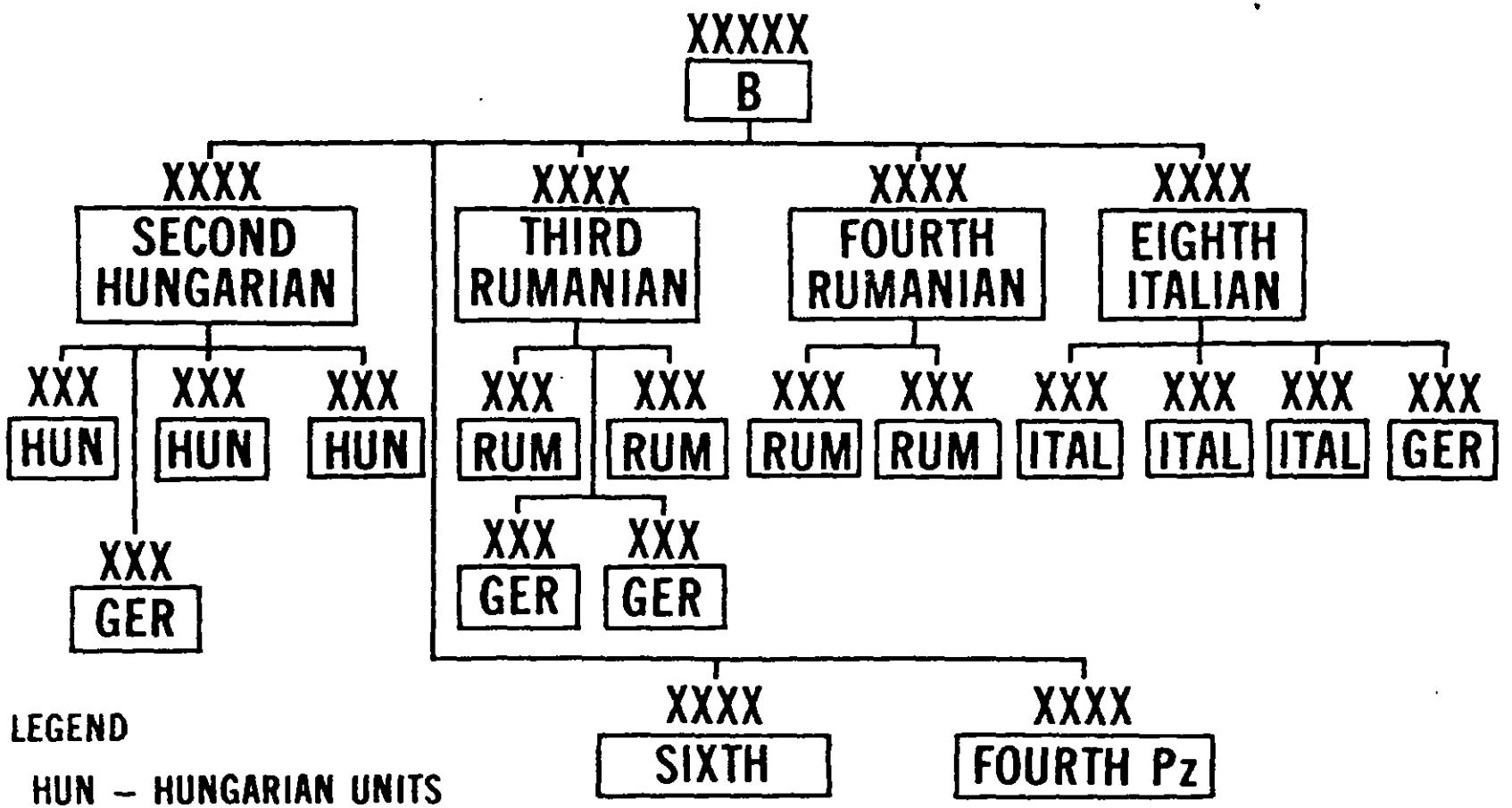

LEGEND

HUN – HUNGARIAN UNITS

RUM – RUMANIAN UNITS

GER – GERMAN UNITS

ITAL – ITALIAN UNITS

Figure 4.[28]

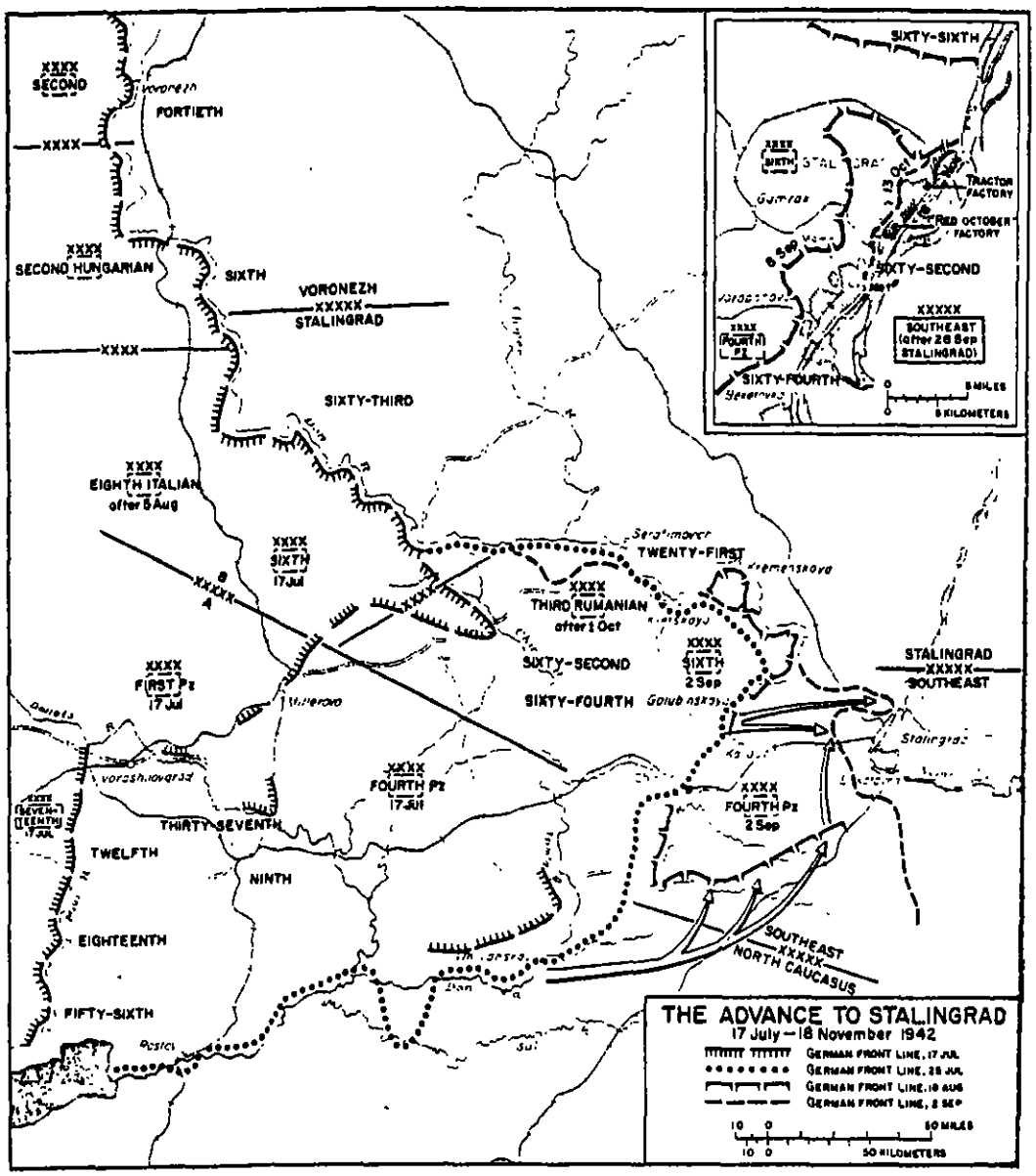

Map 6. The Middle Don Front, November 1942

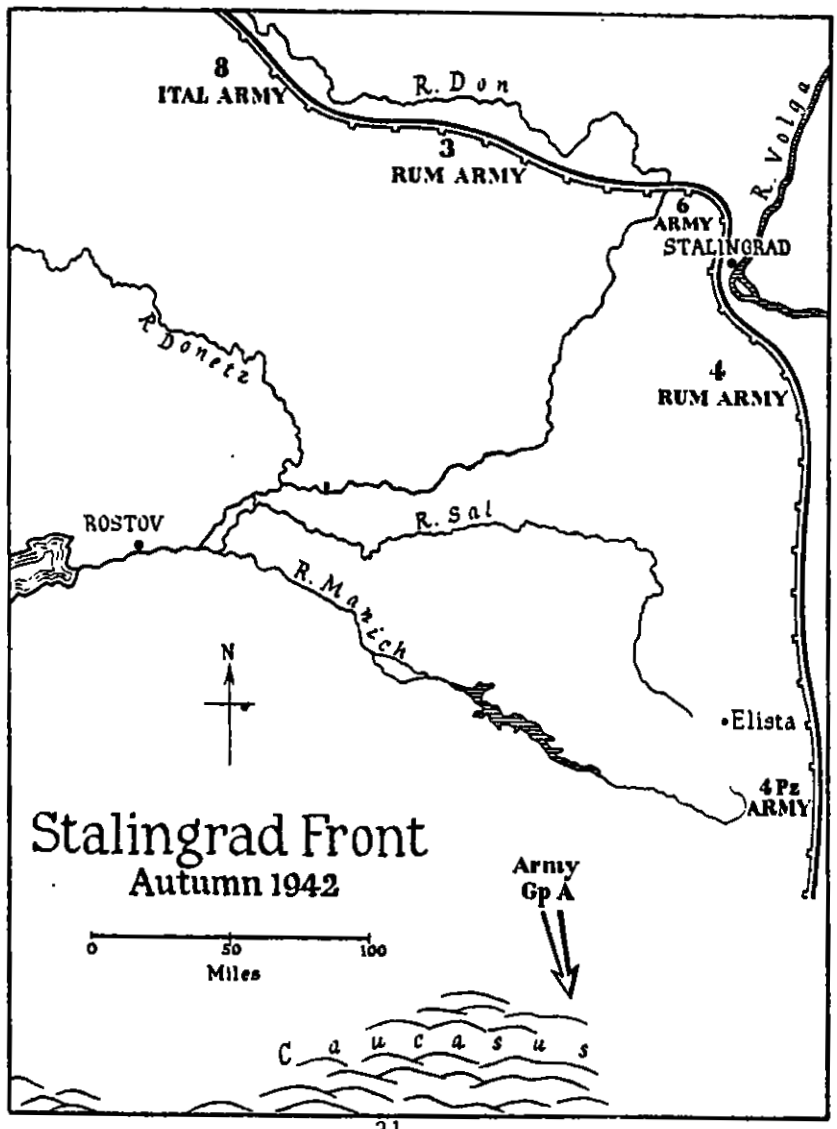
8
ITAL ARMY
R. Don
3
RUM ARMY
R. Volga
6
ARMY
STALINGRAD
R. Donetz
4
RUM ARMY
ROSTOV
R. Sal
R. Manich
N
Elista
4 Pz
ARMY
Stalingrad Front
Autumn 1942
Army
Gp A
0
50
100
Miles
Caucasus

Map 7.[31]

The encirclement of the 6th German Army was the object of Operation Uranus. On 19 November 1942 the Southwestern FRONT began a massive tank assault from the bridgehead at Kremenskaya against the Rumanian 3d Army and the left wing of the 6th Army. Another assault began on 20 November at the Beketonskaya bridgehead south of Stalingrad against the 4th Rumanian and 4th Panzer Armies. The left wing of the 6th Army held but the 3d Rumanian Army crumbled in the wake of the onslaught. The 4th Rumanian Army also broke and the Soviets accomplished the linkup at Kalatsch on 21 November.(Map 8). Trapped in the pocket were 6th Army and elements of 4th Panzer and the 4th Rumanian Armies. In the two weeks that followed this operation the Soviets consolidated their hold on the Stalingrad pocket with the DON and Stalingrad FRONTS while the Germans reorganized along the Chir river to make preparations for the conduct of a relief operation for 6th Army. The 6th Army did make plans to conduct a breakout toward the end of November but Hitler insisted that they stay and hold until relief forces arrived.

The Rumanians were virtually an ineffective fighting force in the Middle Don region. The Soviets now concentrated on the elimination of the Italian Army. On 10 December the German relief attempt (Operation Wintergewitter [Flashing Thunder]) commenced with the 4th Panzer Army from the Kotelnikovskii area. The Soviet High Command was forced to alter the original offensive plan (Operation Saturn) when operations at the Chir river failed and the German relief effort commenced. The revised Soviet plan (Operation Little Saturn) was designed to annihilate the Italian 8th Army and envelop Army Detachment Hollidt, an ad hoc combination of German and Rumanian units.(Map 9).

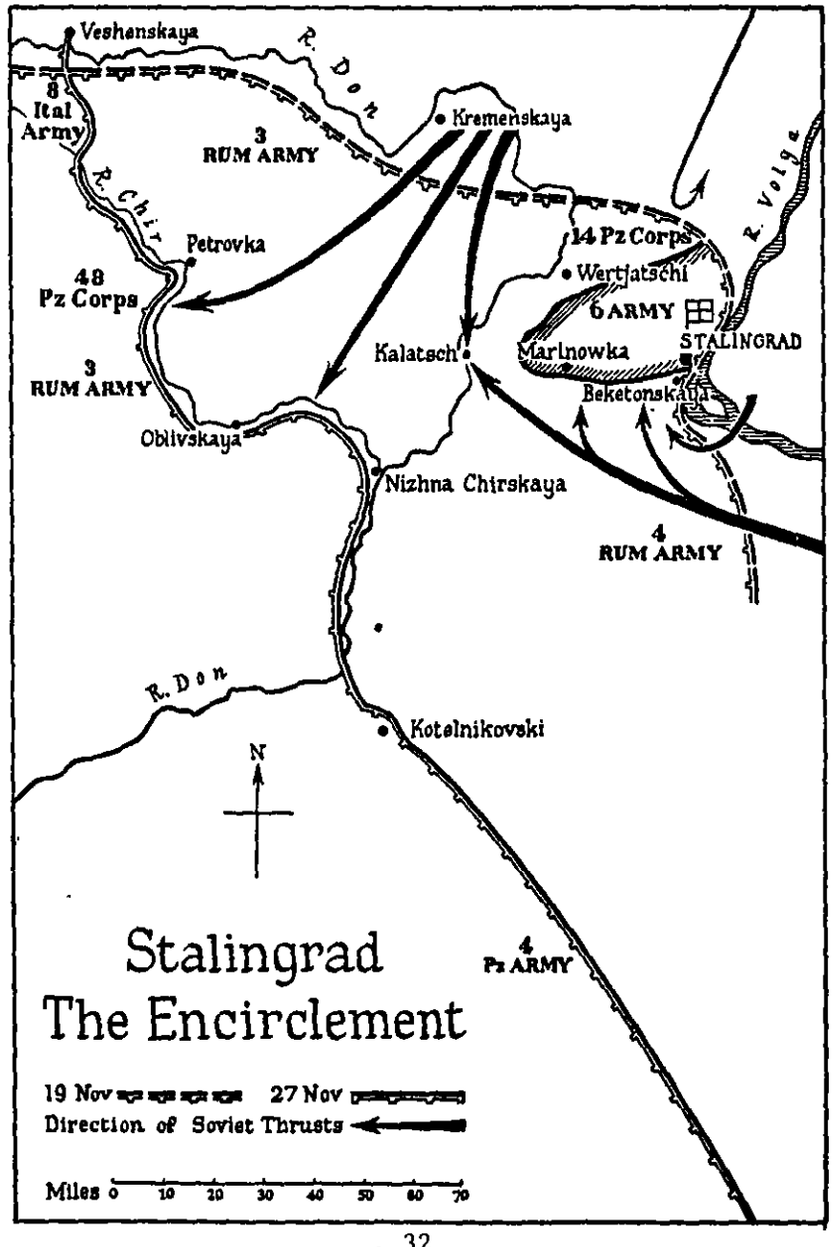
Veshenskaya
R. Don
8
Ital
Army
3
RUM ARMY
Kremenskaya
R. Chir
Petrovka
48
Pz Corps
14 Pz Corps
Wertjatschi
R. Volga
6 ARMY
STALINGRAD
Kalatsch
Marinowka
3
RUM ARMY
Beketonskaya
Oblivskaya
Nizhna Chirskaya
4
RUM ARMY
R. Don
Kotelnikovski
N
Stalingrad
The Encirclement
4
Pz ARMY
19 Nov
27 Nov
Direction of Soviet Thrusts
Miles 0 10 20 30 40 50 60 70

Map 8.[32]

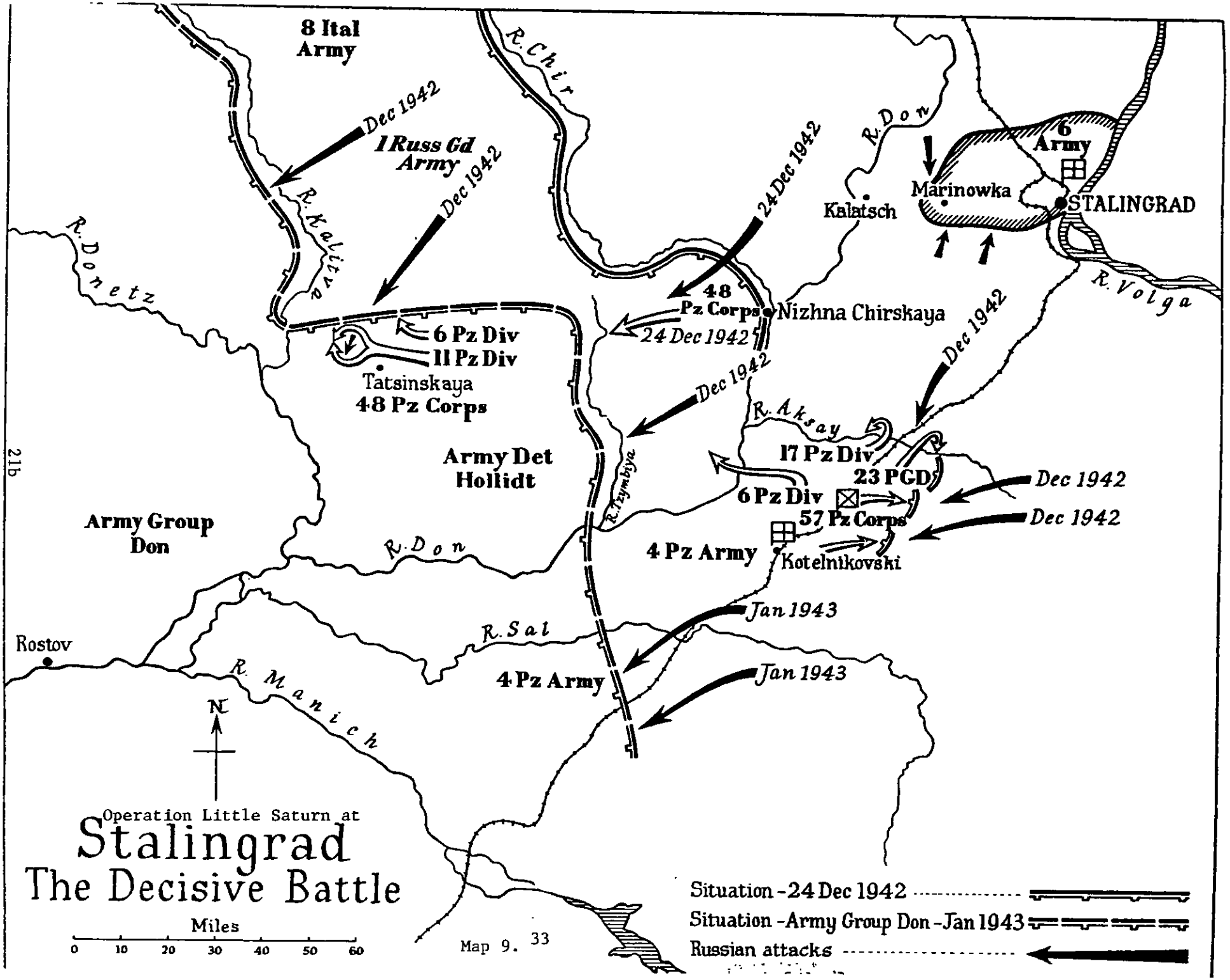
8 Ital Army
R. Chir
Dec 1942
I Russ Gd Army
Dec 1942
R. Kalitva
R. Donetz
24 Dec 1942
R. Don
6 Army
Marinowka
STALINGRAD
Kalatsch
R. Volga
48 Pz Corps
Nizhna Chirskaya
24 Dec 1942
Dec 1942
6 Pz Div
II Pz Div
Tatsinskaya
48 Pz Corps
Dec 1942
R. Aksay
Army Det Hollidt
17 Pz Div
23 PGD
Dec 1942
6 Pz Div
57 Pz Corps
Dec 1942
Army Group Don
R. Don
4 Pz Army
Kotelnikovski
Jan 1943
R. Sal
Rostov
R. Manich
4 Pz Army
Jan 1943
N
Operation Little Saturn at
Stalingrad
The Decisive Battle
Miles
0 10 20 30 40 50 60
Situation - 24 Dec 1942
Situation - Army Group Don - Jan 1943
Russian attacks

Map 9.

21b

On 16 December 1942 Marshal Zhukov launched Operation Little Saturn. In four days the Italian 8th Army was soundly defeated and left a gap sixty miles wide along the left flank of Army Detachment Hollidt. "The Italians were unable to concentrate men and weapons at critical points because their 9 divisions were inadequately motorized. On top of it, the Italians had loaned the Rumanians 145 trucks just before the Rumanian collapse, and these were presumably lost in the November battle."[34] The 6th PZ Division was detached from the 4th PZ Army and sent north to reinforce the 48th Panzer Corps. This action critically weakened the relief effort on Stalingrad and sealed the fate of the 6th Army. Operation Wintergewitter was halted in the vicinity of the Aksay river by the end of December.

The final ally to be eliminated was the 2d Hungarian Army. General Golikov's Voronezh FRONT attacked remnants of the Italian 8th Army and the 2d Hungarian Army on 12 January 1943. By 20 January Operation Ostrogozh-Rossosh was over.(Map 10). The 2d Hungarian Army was totally eradicated and exposed the flanks of German armies. By the end of January the German Army and the remnants of her allies were forced to withdraw and reorganize along the Donetz river. The 6th Army was lost and widespread resentment was permeated throughout the ranks of the Axis allies.

The wide frontages on the eastern front dictated the maximum use of all allied forces. The lack of commonality in political/military aims, equipment, training, and tactical doctrine, were dramatically manifested on the eastern front. An effective environment of interoperability was never achieved. In coalition warfare, especially in defensive combat operations, interoperability

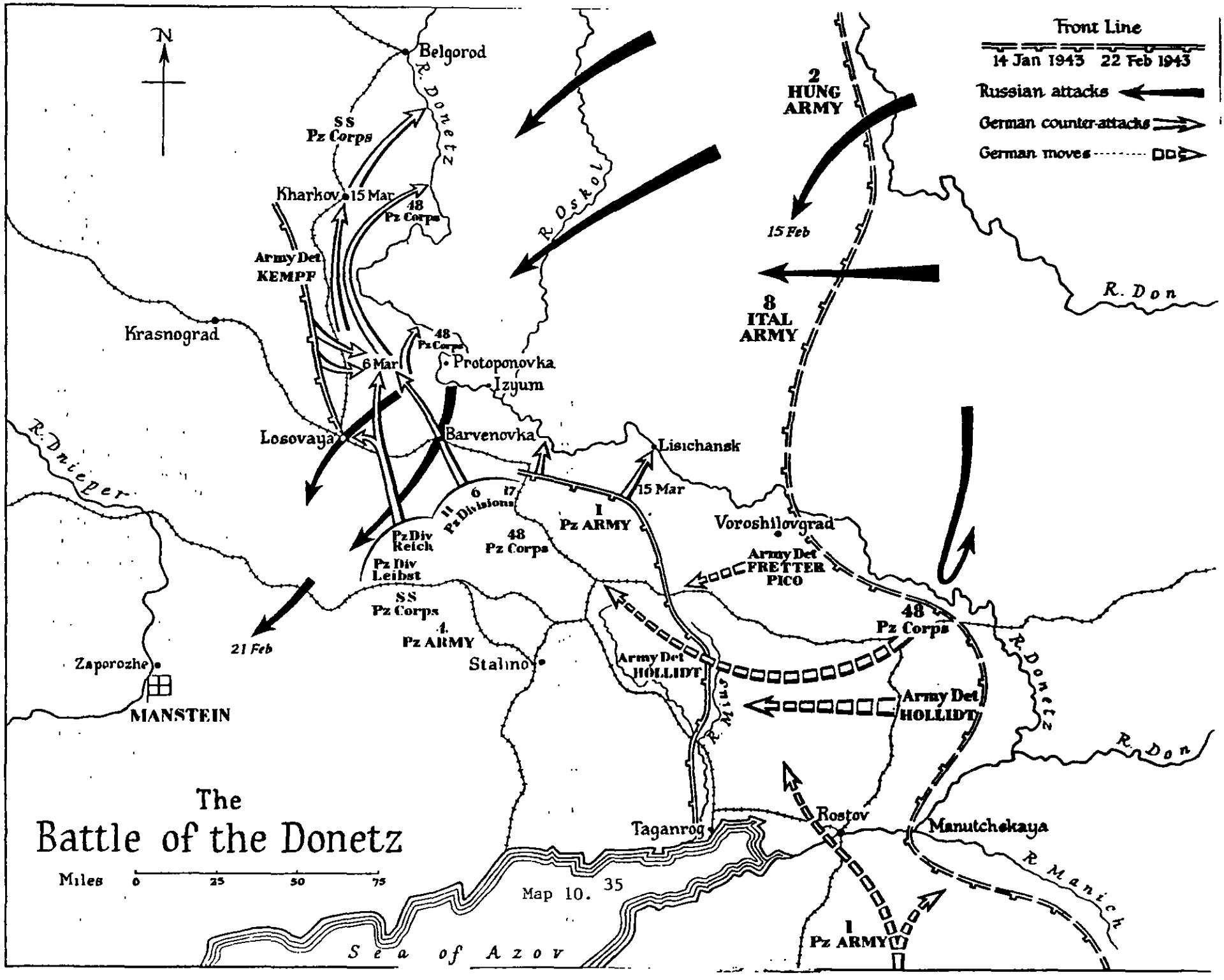
Front Line
14 Jan 1943 22 Feb 1943
Russian attacks
German counter-attacks
German moves
N
Belgorod
R. Donetz
SS Pz Corps
Kharkov
15 Mar
48 Pz Corps
Army Det KEMPF
Krasnograd
6 Mar
48 Pz Corps
Protoponovka
Izyum
R. Oskol
2 HUNG ARMY
15 Feb
8 ITAL ARMY
R. Don
Losovaya
Barvenovka
Lisichansk
15 Mar
R. Dnieper
6
17
11 Pz Divisions
Pz Div Reich
Pz Div Leibst
48 Pz Corps
I Pz ARMY
Voroshilovgrad
Army Det FRETTER PICO
SS Pz Corps
4. Pz ARMY
21 Feb
Zaporozhe
MANSTEIN
Stalino
Army Det HOLLIDT
48 Pz Corps
Army Det HOLLIDT
R. Donetz
R. Don
Taganrog
Rostov
Manutchekaya
R. Manich
I Pz ARMY
Sea of Azov
The
Battle of the Donetz
Miles 0 25 50 75

Map 10. 35

must be fully integrated and maximized by all allied units. If not the cohesion and effectiveness of an allied force will deteriorate rapidly as the Axis experienced in 1942-43. Integration and harmony can be learned and achieved in limited offensive operations (Rommel's Cyrenaica campaign, 1941) provided the personalities of the commander and staffs effectuate close cooperation. However if complete interoperability is not achieved then offensive operations will also deteriorate over time and when faced with a stronger force. Considering these lessons learned by the German Army in World War II it becomes readily apparent that there are basic imperatives for interoperability. These imperatives, if implemented, could enhance US/German conventional preparedness and operations within NATO.

IMPERATIVES OF INTEROPERABILITY AT THE OPERATIONAL LEVEL

Combined operations can be unwieldy, cumbersome and too troublesome to meet the purposes for which they are designed. The inherent problems of language, equipment, organizational disparities, signal, tactical doctrine and other cultural baggage brought by different armies can formulate an uncohesive hodgepodge of men and materiel. Coalition warfare has been the norm in European wars for centuries. Frederick the Great recognized this trend in the eighteenth century after the Seven Years War. He was nearly exhausted by the combined armies of Russia, Saxony, Austria and France. Problems that inhibited those coalition armies continued through subsequent wars and are apparent today. Efforts are ongoing to improve interoperability however the problems with NATO are exacerbated because there are sixteen sovereign nations with a multitude of divergent national interests, political and strategic objectives. NATO operational commanders and staffs must share a spirit of mutual respect and awareness of each member's interests.(Figure 5). These difficult and laborious tasks cannot be solved through trial and error once hostilities begin. Intense planning and negotiations must continue to bridge the gaps that exist amongst the allies.

To achieve operational success in NATO military commanders and staffs must seek these imperatives of interoperability: (1) **harmonious unit organizations**, (2) **standardized equipment and training**, (3) **tactical doctrines compatible** with the consensus operational doctrine, (4) **unified command, control, communications and information systems (C3I)**, (5) **coordinated liaison and**

COMMAND AND STAFF

- UNDERSTAND ALLIED POLITICAL & MILITARY OBJECTIVES.
- CLARITY & SIMPLICITY IN PLANS & ORDERS.
- VISITS TO ASSESS ALLIED CAPABILITIES.
- COMMAND ATMOSPHERE PERMITTING POSITIVE CRITICISM.
- UNITS EQUIPPED FOR LIAISON DO BETTER.
- CONSTANT EFFORT TO ELIMINATE SOURCES OF CONFUSION & MISUNDERSTANDING.
- FIRM GRASP OF ALLIED ORGANIZATIONAL & OPERATIONAL DOCTRINE & PHILOSOPHY.
- EQUITABLE TREATMENT & EXPOSURE FOR NATIONAL & INTEGRATED UNITS.

Figure 5.[36]

staff planning, (6) **mutual understanding/simplicity**, (7) **cooperation** and, (8) **adequate sustainment and logistics**. These imperatives are all interrelated whereas improvements or degradations of one imperative affect the others.

Disparities in organization will cause operational, administrative and logistical problems. Unit organization normally dictates how that unit can best be employed. If a unit organization is not in harmony with similar allied units, then measures must be pursued to form a command structure/organization which will facilitate the use of that unit to complement the others. Rommel did this effectively in North Africa by integrating Italian and German units to form combat groups. The administrative and logistical requirements necessary to accomplish the same practice amongst all NATO allies are astronomical and practically chimerical because of the allies tendencies to protect their national economic interests.

Ideally all equipment and training of the forces should be standardized, at least at the tactical level. The cumulative effects of doing so would enhance logistics operations by simplifying the allocation of ammunition, supplies, and the repair and maintenance of mechanized and armored vehicles. This demands prior agreements on the distribution of raw materials and the production of armaments by member nations. If this is economically infeasible in peacetime, then member nations should produce combat vehicles that are compatible in mobility, firepower, and protection. Currently the US and Germany will field at least five different main battle tanks and a host of mechanized vehicles with varying capabilities. Considering the various systems from the other member countries of NATO there exists a situation which

can cause major problems with vehicle identification. Potentially, this self-inflicted chaos can lead to fratricide amongst the allies. Combined training exercises expose major problems with interoperability that otherwise would be concealed. An increased spirit of awareness and dialogue will eventually produce common tactical views leading to identical command principles fostered by operational commanders.

Every nation has its own views on how to fight the next battle. No two countries in NATO envision the next battle completely the same. Most battle doctrine is based on unit organizations, equipment, capabilities and theory. Therefore units are trained according to the established doctrine of their respective countries. "As a minimum, understanding how the adjacent allied unit fights--its terminology, concepts, and doctrine--is vital."[37] Those forces that fight under NATO must accept the forward defense doctrine. Any deviations from that doctrine at the operational level may cause more problems than they will correct. The Rumanians shunned German doctrine in World War II which contributed to the diastrous results of Operation Uranus.

C3I is the nerve center of operational interoperability. It is essential in any operation because it conveys the commander's intent and synchronizes the battlefield. This becomes more apparent in coalition warfare than unilateral warfare. First and foremost there must be one unified command structure from top to bottom. Signal communications must be interoperable with standard language and message procedures. Instructions must be concise, precise and simple. Every node of intelligence and information must be maximized, processed in a timely manner, and disseminated to the appropriate commanders and staffs.

The myriad of differences amongst the allies underscore the need for liaison. Technically liaison can be considered a subset of C3I or mutual understanding, but it is so critical toward the sustainment of unity of purpose and action that it should be treated as a separate imperative. There is no substitute for liaison in interoperability functions. The German establishment of an elaborate liaison network in World War II provided timely information and control amongst her allies. The liaison team should become an integral part of any headquarters staff. The liaison officer must be thoroughly knowledgeable of military operations and possess the necessary language skills to convey accurate messages. Staff planning must account for the disposition, capabilities, and effectiveness of allied units. Efforts must be made to eliminate confusion and misunderstandings especially after operations commence. If possible, combined staffs should reflect the allied forces involved in the operation. Consideration must be given to the time necessary for orders to reach subordinate units and more so to the translation and interpretation of those orders. Therefore more time has to be allotted for unit preparation.

Mutual understanding of the desired end state of the conflict amongst all allies is paramount. This understanding must be shared by all without the constraint of national interests. The end state should be what is best for the entire coalition and not selected members. Objectives, missions, and the understanding of the desired end state must be as simple as possible.

Cooperation should be part of normal operations, functions and missions. Without close cooperation mutual understanding, trust and confidence are lost. Cooperation begins at the

national level and permeates throughout the existing coalition structure. Many times in coalition warfare, a commander from one country must subordinate himself to a commander from another country. Cooperation amongst staff officers is absolutely essential in minimizing friction which may void the value of the coalition. This cooperation fosters prompt coordination and contributes immeasurably to the homogeneity of the command structure.

Finally the sustainment problems at the operational level within a coalition can hastily disintegrate cohesiveness. Germany's inability to supply her allies adequately on the eastern front in 1942-43 significantly contributed to their demise. The problems of logistics in any allied army will be challenging at best. Different force compositions, equipment and nationalities compound these problems especially in Class I, IV, V, and IX. "The popular cry heard is that 'logistics is a national responsibility.' Although this may be true, it expresses an attitude that does not help interoperability and, whilst logistics can never become completely standardized, there are a number of agreements possible which would enhance the logistic capability of the alliance and, concomitantly, its operational efficiency."[38]

Two members of NATO that come close to meeting these imperatives of interoperability are the US and German forces. The similarities/compatibilities in organization, equipment and capabilities have enhanced interoperability amongst tactical units. However it is victory at the operational level as well as the tactical level that must be achieved for NATO to maintain the status quo. An examination and assessment of the US and German modernized heavy corps will demonstrate the interoperable warfighting commonalities between the two armies.

CHARACTERISTICS AND CAPABILITIES OF THE US AND GERMAN MODERNIZED HEAVY CORPS

The US and German modernized heavy corps are structured for European warfare and designed for quick mobility, rapidly devastating firepower, and protection. A comparison of the two organizational structures (Corps- App. 1 & 2; Divisions- App. 3, 4 & 5) indicates "the main battle tank retains a position of prime importance in operational planning despite the effectiveness of modern anti-tank weapons. In combined arms operations, when supported by mechanised infantry, tank destroyers and armoured reconnaissance vehicles, and by helicopters, engineers and artillery, the tank can still play a decisive role as long as its three principle characteristics of firepower, protection and mobility are used correctly."[39] The most significant organizational differences between the two corps occur at the division and brigade levels. (App. 6 & 7). German brigades are self sustaining with organic combat support to support its maneuver battalions from 3-5 days. German brigade integrity is retained during combat. The US maintains a division base organization with combat support and service support assets to sustain brigades. The combat basic load requirement for US units is 3 days of essential supplies.

The primary firepower of the US modernized corps is the synergism derived from the combat support systems with the M1 tank. Currently the M1 has the 105mm cannon, but the fielding of the M1A1 with the 120mm smoothbore cannon in the 1990s will provide additional penetrating capability. The German firepower comes from the synergism of its combat support systems with the Leopard 2 tank with the 120mm smoothbore cannon. The German home defense reserves maintain the Leopard 1 (105mm) and M48A2 (105mm) main

battle tanks. The fielding of the M1A1 will enhance interoperability by simplifying the ammunition and fuel logistics requirements. Both the M1 and Leopard 2 are best suited for offensive operations in open country-- not retrograde moves in reverse gear. It has also been found that the "operation and transfer of knowledge between the LEO 2 and M1 seem to be no problem, as evidenced by a high percentage of hits with little prior training."[40] Cross training programs at the tactical level can have operational implications if crewmen from both countries are familiar with both tanks.(Figure 6).

The primary mechanized vehicle for the US is the M2 Bradley Fighting Vehicle. Its main armament is a 25mm automatic cannon, dual tubed TOW antitank missile launcher, and a 7.62 coaxial machine gun. The German Marder Infantry Fighting Vehicle (IFV) has a 20mm machine gun and the MILAN antitank missile system which has the capability of being vehicle or ground mounted. The antitank companies in each German brigade are equipped with 12 JAGUAR 1 or the improved JAGUAR 2 tank destroyers armed with the Euromissile HOT or TOW respectively. This provides the German corps with significantly more ground antitank systems than its US counterpart. The US corps compensates for this shortcoming with AH64 attack helicopters within the division.

Other interoperable similarities between the US and German Corps are: (1) tactical doctrine, (2) orders, (3) control measures and graphics, and (4) communications. US and German tactical doctrine emphasize maneuver, combined arms operations, and fighting on an extended battlefield. The crucial disparity in doctrine lies at the operational level between the US AirLand Battle and the German FD concepts. Portions of the AirLand Battle

	Leopard 2	M1 Abrams	M1A1	Marder	M2 Bradley	Jaguar 1/2	T-72	T-80
Crew	4	4	4	10	9	4/4	3	3
Max Speed(km/hr)	68	72	67	80	66	70/72	80	50
Max Range(road)(km)	500	450	450	600	483	400/400	500	NA
Engine	multifuel	turbine	turbine	diesel	diesel	diesel	diesel	turbine?
Main Armament	1x120mm smoothbore	1x105mm rifled gun	1x120mm smoothbore	1x20mmMG MILAN	1x25mm cannon	HOT/TOW 75-4000/ 65-3750	122mm smooth-bore --KOBRA	125mm smooth-bore TLGM--
Target Acq. Rangefinding	laser range-finder	laser range-finder	same M1	NA	Range-finder	NA	laser range-finder	NA
Rate of Fire(rds/min.)	8	12	12	NA	NA	3 per 90 sec	6-8	6-8
Basic Load(rds)	42	55	40	NA	900(25mm) 7(TOW)	20/12	NA	NA

Figure 6. US and German Armored and Mech Vehicle Characteristics versus Soviet Armor

doctrine are compatible at the tactical level, but the two are not at the operational level because of the political and military interests discussed earlier. The use of the five paragraph operation order, graphics and control measures is standard between the two countries. Language, liaison requirements and the lack of combined operational training will cause an increase in the time required to plan and execute interoperable operations. Because the factors of time and space are critically important at the operational level, these are significant constraints on the operational commander's flexibility to maneuver in a timely manner once his intent is clearly understood.

German radioteletypewriter (RATT) equipment and FM radios are compatible with similar US communications equipment. There are differences in voltage and operating bands which must be reconciled prior to operations. Secure compatibility does not exist. Language differences, exchanges of communications-electronics operation instructions (CEOI) and nonstandard radiotelephone procedures can cause significant problems with cross attachments. Liaison teams with national signal communication means become critically important to bridge the gaps of these problems.

Finally the logistics and sustainment disparities must be considered because cross attachment of units at this time is infeasible. The preferable command relationship for combined operations is obligatory cooperation whereas logistics remain a national responsibility. This critical constraint limits interoperable operations to 3-5 days. Standardization in small arms and artillery must also be achieved. If sustainment problems can be solved <u>ad hoc</u> and long term operations can be considered.

FEASIBILITY OF THE US/GERMAN INTEROPERABLE AD HOC CORPS

Ideally allied forces should fight as separate entities to achieve a common operational end. Several dilemmas face a NATO operational commander if 'forward defense' does not work: (1) what flexibility does he have to muster and maneuver combat power; (2) what conventional measures can be taken to restore the status quo; and, (3) what are the risks involved? US/German interoperability may offer NATO operational commanders the temporary flexibility to integrate US and German forces to achieve a desired force ratio at a decisive point. Because CENTAG has predominantly US and German forces the integration process should be easier in CENTAG than NORTHAG. NORTHAG on the other hand has very little flexibility, if any, because of the five nationalities involved in the theater of operations. Synchronization of operations is just as difficult today as it was on the eastern front in 1942-43.

A projected operational window of opportunity may entice an operational commander to be bold and accept the risks of forming an ad hoc corps to capitalize on that opportunity. The structure of this US/German corps could be any combination of US and German divisions with a comparable combined staff. The design of the operation must be limited to 3-5 days because of the disruptive effects on parent organizations, logistical and combat support shortcomings, command and control problems, and the lengthy time involved to separate and sort the units once the objectives are met. To implement this action with the least amount of friction, the following must be accomplished expeditiously:

1) A unified command must be established with a combined staff arrangement, if possible.

2) The most feasible command relationship is obligatory cooperation.

3) Qualified liaison teams must be formed.

4) Simple mission-oriented orders must be disseminated with haste.

5) Planning and coordination are continuous processes until all units have rejoined their parent organizations.

If units have been engaged in combat other factors that must be considered are:

1) The time necessary for orders to reach subordinate formations and units.

2) The combat and logistical capabilities of each available force.

3) The time required to establish the appropriate liaison, logistic and administrative staffs to insure adequate support.

4) The time needed to establish communications and signal nodes to effectuate cooperation.

5) The time available for reconnaissance and the processing of intelligence.

The conventional measures at the disposal of the NATO operational commander will depend on his initiative, available forces and the options afforded him by the enemy commander. To seize the initiative implies offensive action to which five counterstrike options come to mind: (1) a counterattack in a vulnerable flank or rear area, (2) a counterattack to force a meeting engagement to blunt the nose of a penetration and fore-

stall the enemy timetable, (3) a relief operation of an encircled force, (4) a raid on logistics nodes and, (5) a combination of any two above.(Map 11).

The political and strategic necessity to conduct certain operations must take into account the available means to conduct the desired operation. It is not enough to have large forces if there is no coordination or cooperation. Operational art cannot be practiced or conducted if command and control of available forces is insufficient. The size and nature of the operation also depends on the available forces and the capability to maneuver them. A desired strategic end state to buy time for the arrival and deployment of strategic reserves, the establishment of a blocking position to protect a bridgehead or port, or the need to regain lost territory may necessitate a counterattack. However, force ratios or the lack of command and control may negate the counterattack option. The prudent operational commander could conduct a raid on logistics nodes and achieve the same effect in the long term as the counterattack. The NATO operational commander must always consider the ways and means to achieve the desired end state.

With exceptional foresight, boldness and instinct the NATO operational commander could indeed see the utility of organizing an ad hoc corps. There are several risks involved. The cumulalative effects of those risks related to imperfect interoperability must be weighed against the operational advantages and the desired end state of success. Offensive operational success can be achieved with partial interoperability as demonstrated by Rommel in North Africa. It must be remembered that ad hoc

MAP 11- NATO Counterstrike Options

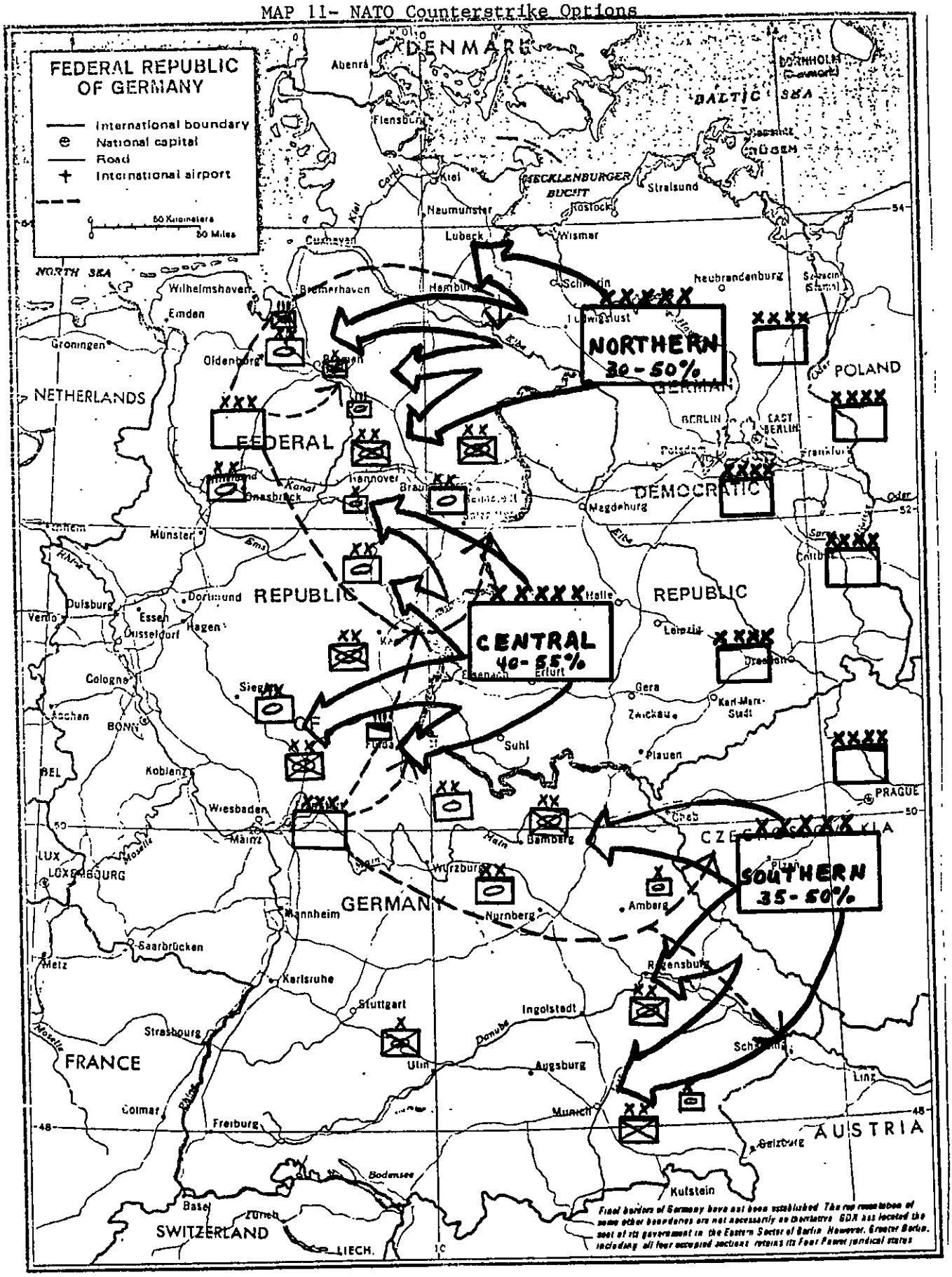

arrangements are temporary in nature and units must be released to parent organizations within five days. The operational pause during the 'sorting out' phase is a prime risk which must be anticipated with planned contingencies. Branches and sequels must address partial success and failure. When operational commanders accept risks, they must also be prepared to adapt to failure as well as success. The friction involved with employing any ad hoc unit contributes to the uncertainty of success. Planning for this uncertainty remains a key element of operational art.

CONCLUSION

"The closer national components of an allied force resemble each other in organization, doctrine and equipment, the less likely they are to experience major problems in interoperability."[41] This thought is particularly pertinent to NATO operational commanders. At the operational level of war uncertainty and change must be accepted as norms rather than exceptions. In Europe the tempo of operations will rise, subside and intensify based on political factors, the cohesiveness of available resources and other variables related to time and space. The ability of NATO operational commanders to maneuver organized formations is complicated by the prevalent problems of interoperability. The side that gains operational success in Europe will be "...the side whose forces used existing military technology in innovative ways, and...the side whose troops were highly trained, properly motivated and well-commanded in carrying out precise coordinated manoeuvres..."[42] For NATO operational commanders to accomplish this end improvements in interoperability must be implemented not only at the tactical level, but the operational level as well. Factors mitigating against interoperability (Figure 7) must be addressed and reconciled at these levels.

If total standardization cannot be fully realized in NATO then the interoperability of C3I facilities, equipment, training and logistics support must be the minimum essential operational imperatives attained. The US/German forces are making positive strides in this direction. "A major task of forward deployed [US] corps is to achieve the highest attainable level of interoperability with allied forces in the theater."[43] Contingency

FACTORS MILITATING AGAINST INTEROPERABILITY

1. TIME
2. MIND SET
3. DIFFERENCES IN MILITARY ORGANIZATION, DOCTRINE, EQUIPMENT & METHODOLOGY
4. INEXPERIENCE
5. PERSONALITIES
6. NATIONAL CHARACTERISTICS
7. LANGUAGE
8. COMMONALITY OF OBJECTIVE

Figure 7.[44]

corps earmarked for deployment to NATO should also have established procedures for interoperability with allied forces. It is not farfetched that an ad hoc US/German corps can be established to conduct a limited contingency mission. Operational commanders must be prepared to form interoperable units and feel confident that these units can provide the desired surprise and deception, concentrate at decisive points, and accomplish their objective while wresting the initiative from the Warsaw Pact.

"Reduced to its essentials, operational art requires the commander to answer three questions:

(1) What military condition must be produced in the theater of war or operations to achieve the strategic goal?

(2) What sequence of actions is most likely to produce that condition?

(3) How should the resources of the force be applied to accomplish that sequence of actions?"[45]

Without interoperability the practice of operational art by NATO operational commanders can be inhibited. There will be very little flexibility, limited agility and a propitious reliance on the collective ability of the corps to win at the tactical level. An ideal situation for a NATO operational commander would be the ability to attach a stronger ally unit with a weaker ally in the same manner Germany used its "corset stay" units in World War II. Another circumstance would be the capacity to formulate an ad hoc corps headquarters to quickly organize and control theater reserves to conduct a limited counterstrike operation. These options would be feasible under ideal

able conditions. A politically unacceptable but militarily feasible alternative would be the piecemeal commitment of reserves to corps units to block enemy penetrations if time and circumstances do not permit him to wait until a corps size reserve is available for deployment in his theater or zone of operations.

If Soviet forces are successful by massing against weaker allies as they were in 1942-43, then the conventional war in Europe may escalate across the nuclear threshold in a matter of days. To use nuclear weapons because of the inability of NATO operational commanders to achieve the conventional initiative is a dilemma that NATO policy makers must address if efforts towards interoperability are continually stalled by individual national interests. Losing a conventional war in Europe may not be caused by the lack of sufficient conventional forces but by the inability of operational commanders to synchronize available multinational forces at decisive points. The time to learn and practice interoperable operational imperatives is not when exigencies begin, but years prior to mobilization and employment of resources.

APPENDIX 1

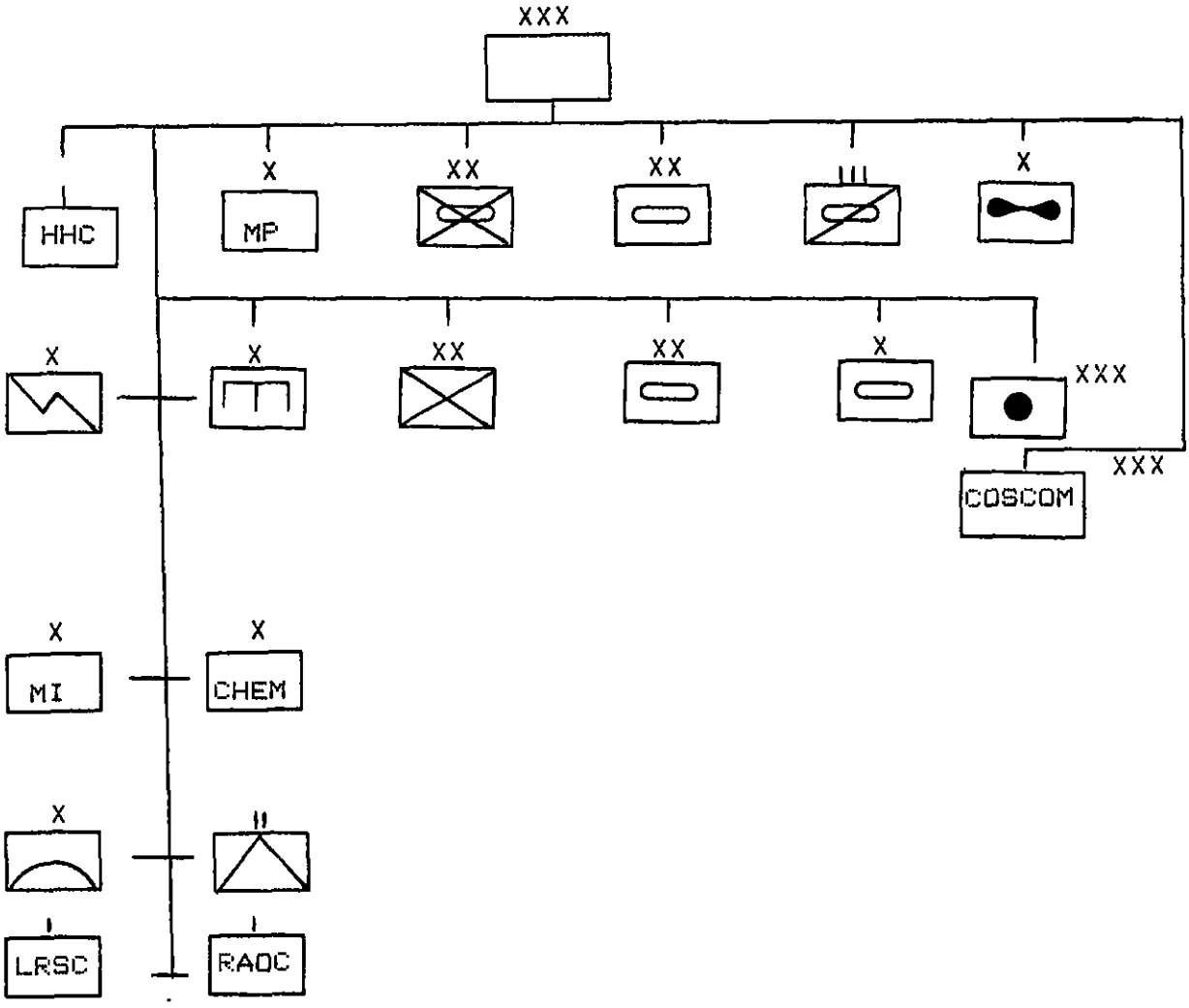

Type Forward Deployed Corps

APPENDIX 2

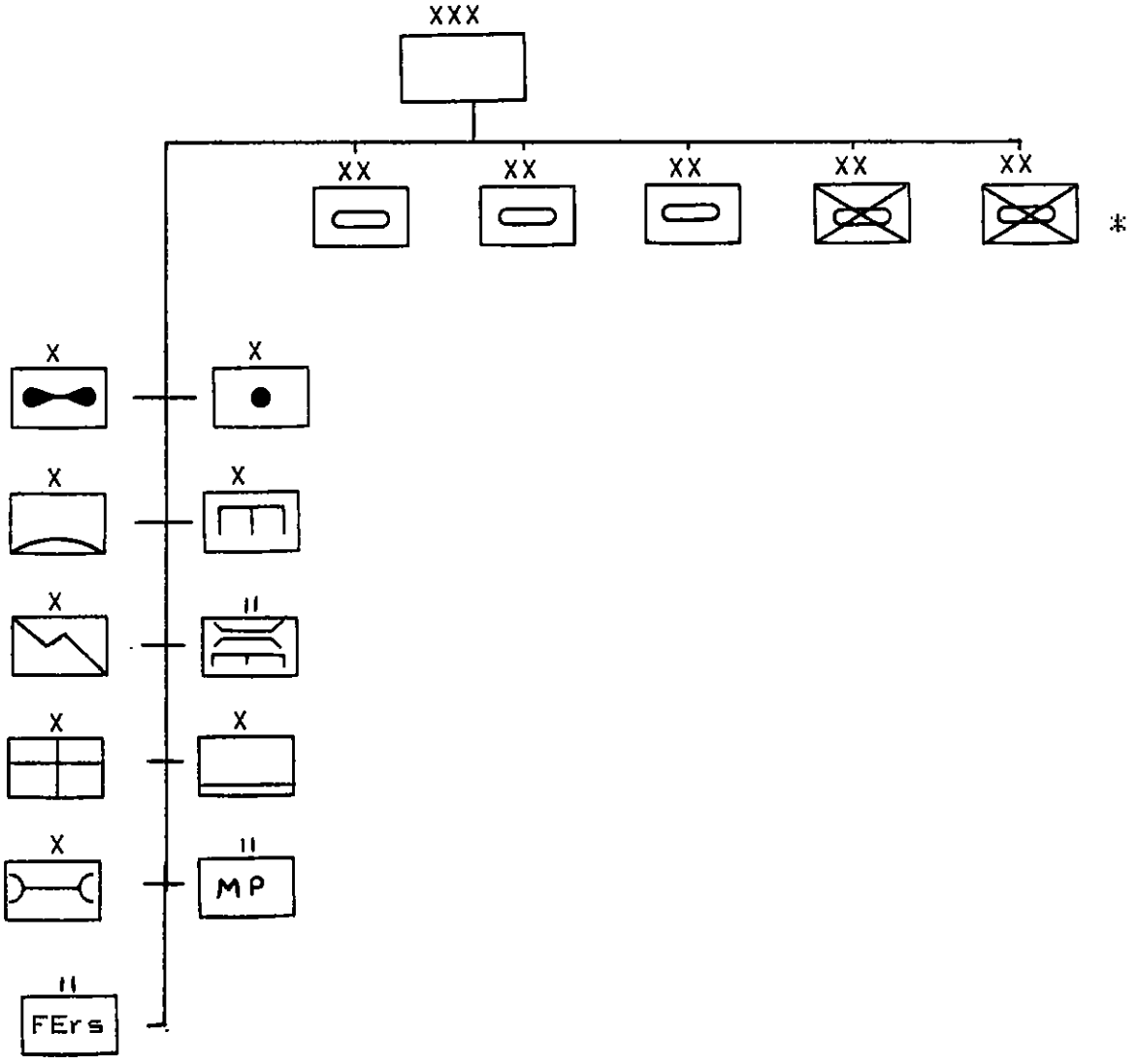

* IGE Corps-- 5 Divisions
IIGE Corps-- 4 Divisions
IIIGE Corps-- 3 Divisions

German Corps

Appendix 3.[46]

ARMORED DIVISION

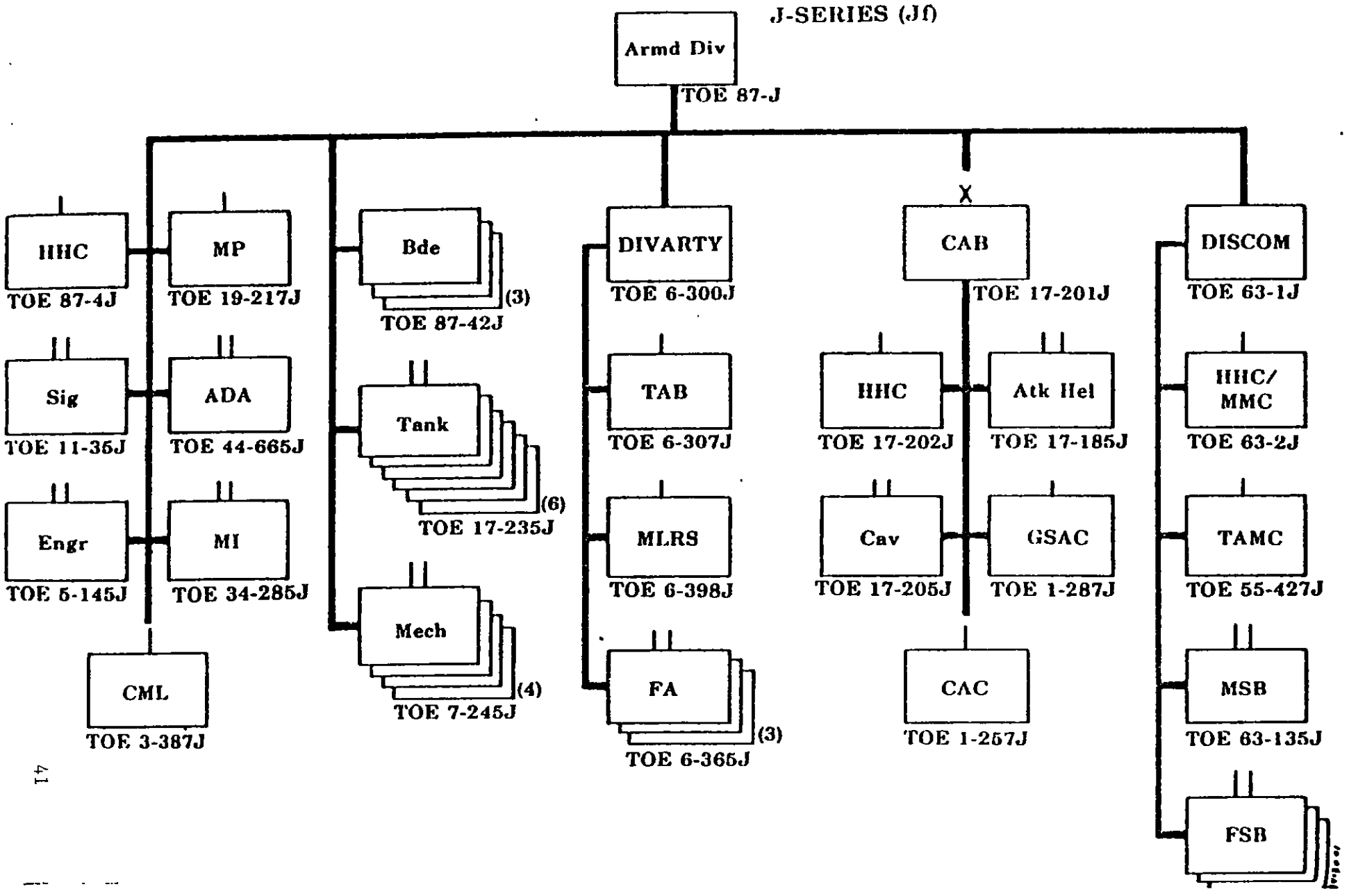

Appendix 4.[47]

MECHANIZED DIVISION

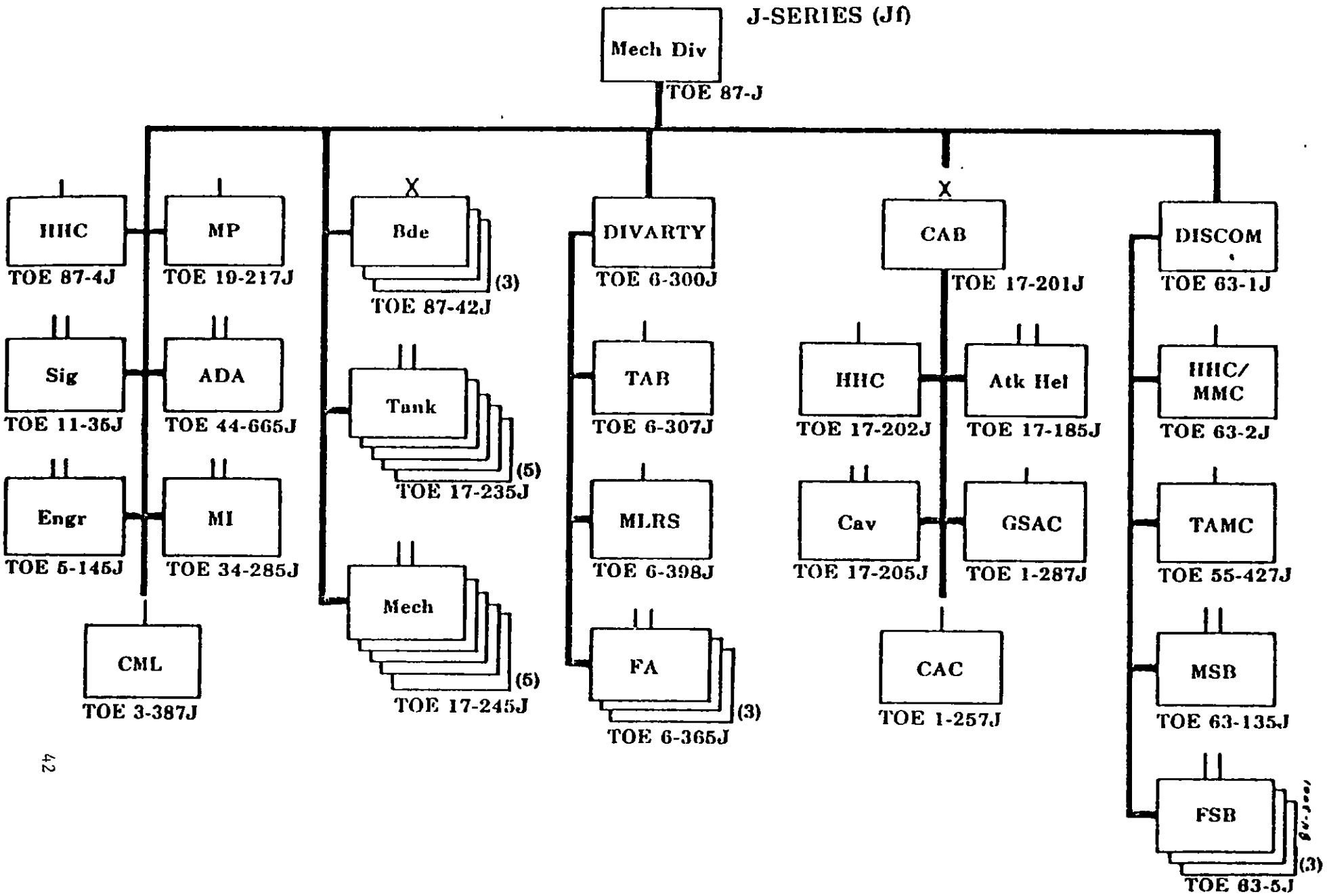

APPENDIX 5

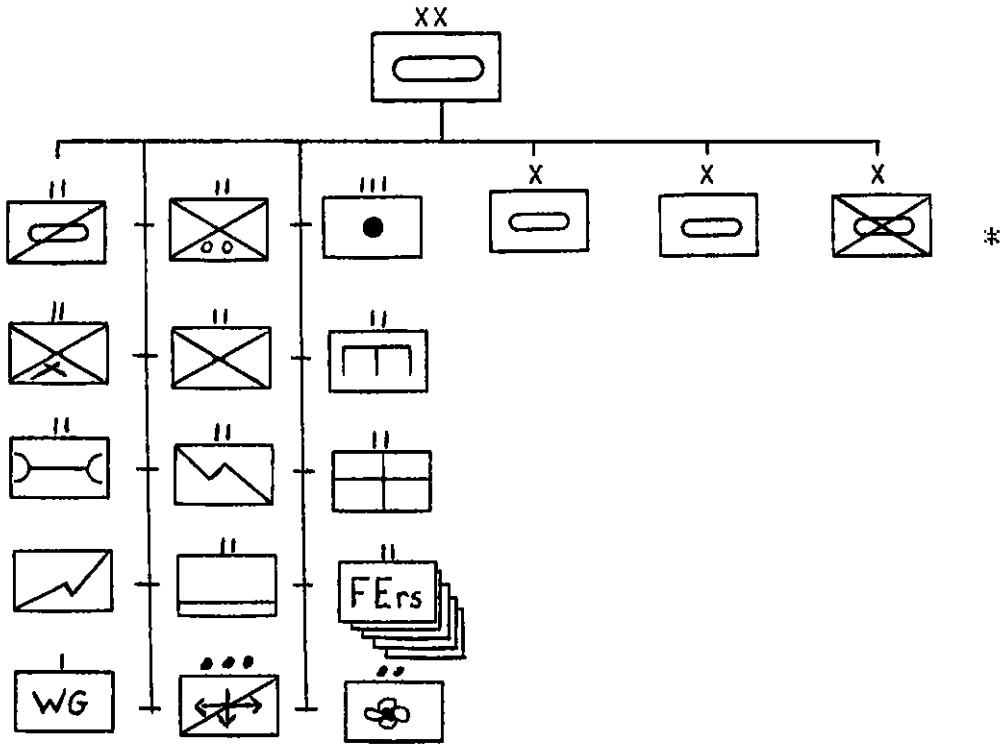

* Mechanized Div.--2 Mech Bdes.
1 Armor Bde.

German Armor Division

Appendix 6

PzGrenBrig

Stand : 01. 10. 1983

	KetKfz/Wa	Vbd/Einh OSt/Einr	Kfz Rad	Kfz Ket	Kfz Ges
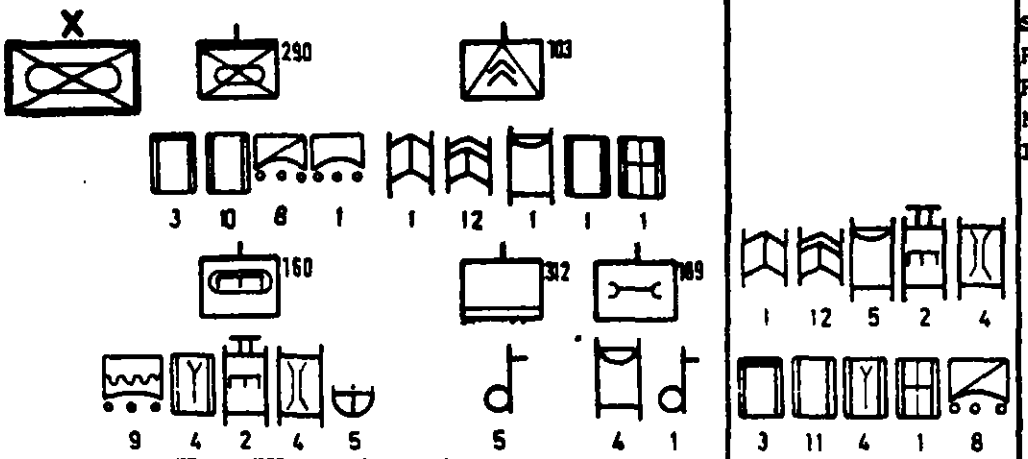		Stab/StKp	69	13	82
		PzJgKp	18	16	34
		PzPiKp	35	10	45
		NschKp	102	-	102
		InstKp	65	4	69
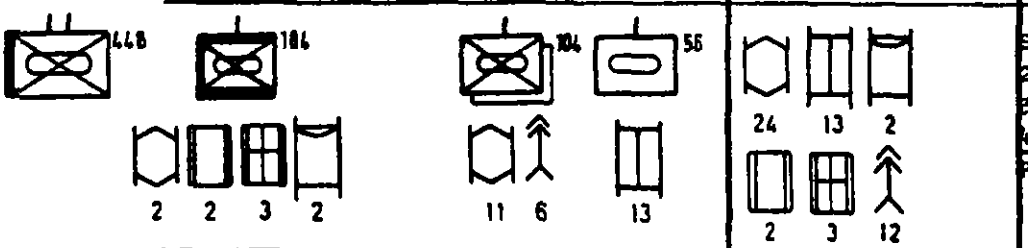		St/VersKp	50	9	59
		2. Kp	3	11	14
		3. Kp	3	11	14
		4. Kp	2	13	15
		PzGrenBtl	58	44	102
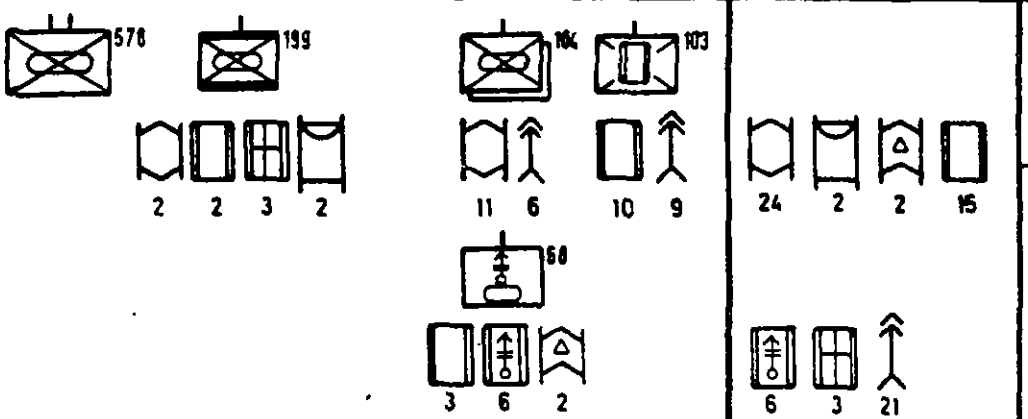		St/VersKp	56	9	65
		2. Kp	3	11	14
		3. Kp	3	11	14
		4. Kp	3	10	13
		5. Kp	8	11	19
		PzGrenBtl	73	52	125
	siehe oben	siehe oben	PzGrenBtl	73	52	125
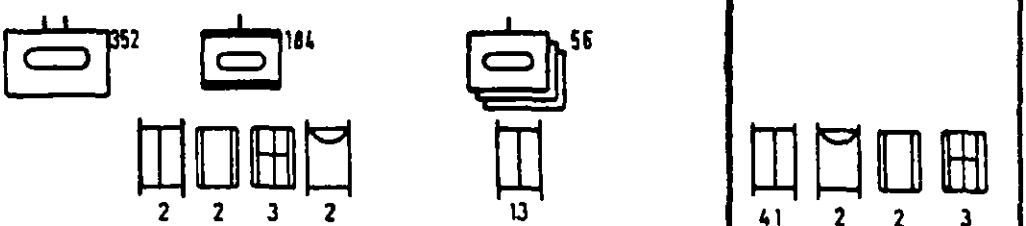		St/VersKp	50	9	59
		2. Kp	2	13	15
		3. Kp	2	13	15
		4. Kp	2	13	15
		PzBtl	56	48	104
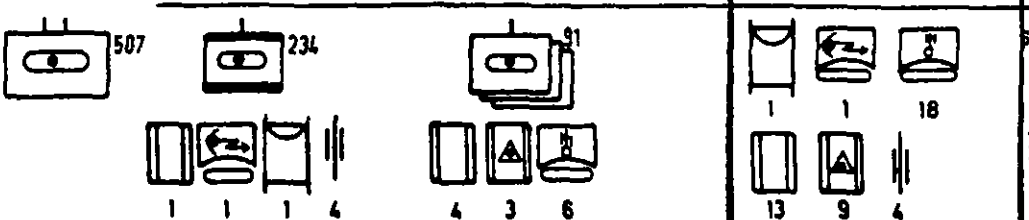		St/VersBttr	84	3	87
		2. Bttr	5	13	18
		3. Bttr	5	13	18
		4. Bttr	5	13	18
		PzArtBtl	99	42	141
Stärke PzGrenBrig: 3.517		PzGrenBrig	648	281	929

Appendix 7

PzGrenBrig

Stand : 01. 10. 1983

	KetKfz/Wa	Vbd/Einh OSt/Einr	Kfz Rad	Kfz Ket	Kfz Ges
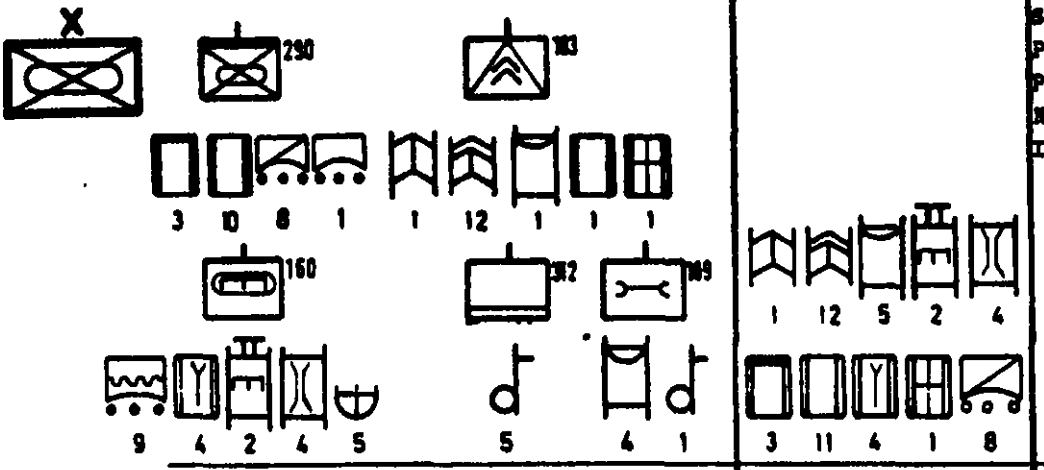		Stab/StKp	69	13	82
		PzJgKp	18	16	34
		PzPiKp	35	10	45
		KochKp	102	–	102
		InstKp	65	4	69
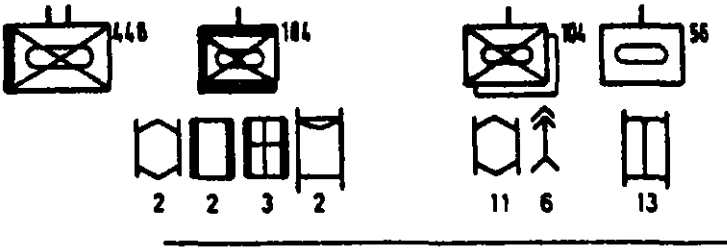		St/VersKp	50	9	59
		2. Kp	3	11	14
		3. Kp	3	11	14
		4. Kp	2	13	15
		PzGrenBtl	58	44	102
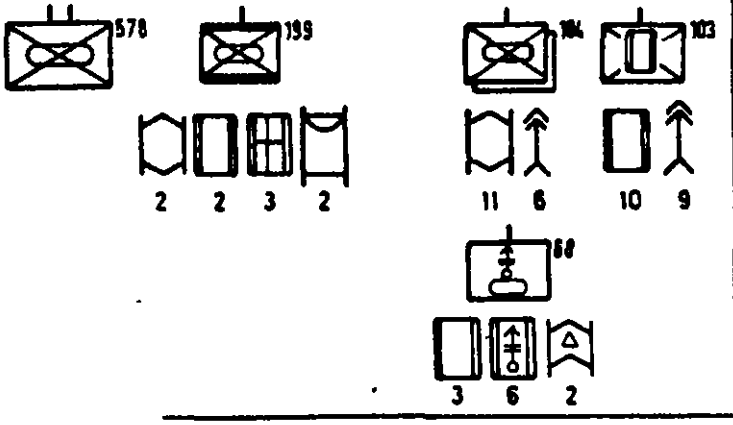		St/VersKp	56	9	65
		2. Kp	3	11	14
		3. Kp	3	11	14
		4. Kp	3	10	13
		5. Kp	8	11	19
		PzGrenBtl	73	52	125
	siehe oben	PzGrenBtl	73	52	125
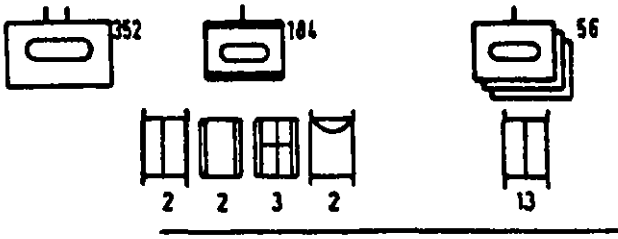		St/VersKp	50	9	59
		2. Kp	2	13	15
		3. Kp	2	13	15
		4. Kp	2	13	15
		PzBtl	56	48	104
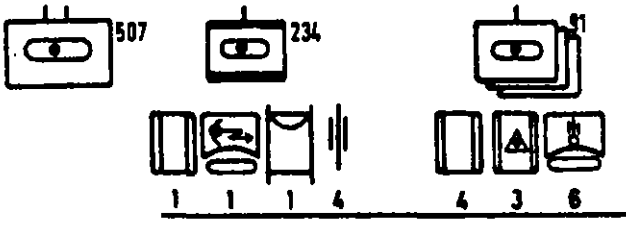		St/VersBttr	84	3	87
		2. Bttr	5	13	18
		3. Bttr	5	13	18
		4. Bttr	5	13	18
		PzArtBtl	99	42	141
Stärke PzGrenBrig: 3.517		PzGrenBrig	648	281	929

ENDNOTES

1. Wilfried Hoffman, "Is NATO's Defense Policy Facing a Crisis," NATO Review, (August 1984), p. 3.

2. Peter F. Dauber, COL., "FORWARD DEFENSE - The Measure of of All Things in the German Army," Fact Sheet No. F-16-85, Federal Republic of Germany: US Army TRADOC Liaison Office, 1 October 1985.

3. Gerd A. Elder von Loew, COL., "Forward Defense in Central Europe - An Operational View," US Army War College Military Studies Program Paper, Carlisle Barracks, PA: US Army War College, (7 April 1986), pp. 6-10. COL. von Loew provides an indepth discussion in this section of his paper on the three options available to the Warsaw Pact in the event of hostilities into Western Europe. COL. von Loew contends that the basis for the forward defense concept stems from the dilemma of trying to ascertain the option that will be assumed by the Warsaw Pact. Given these three options, von Loew contends that the forward defense concept provides the best deterrence for any of the three options.

4. Philip A. Karber, "The Strategy: In Defense of Forward Defense," Armed Forces Journal International, (May 1984), p. 40.

5. Ibid., Karber, p. 40.

6. Ibid., Karber, p. 40-41.

7. Ibid., Karber, p. 41.

8. K. G. Benz, "Fire and Maneuver--the German Armoured Corps and Combined Arms Operations," International Defense Review, vol. 17, (April 1984), P. 477.

9. F.W. von Mellenthin and R.H.S. Stolfi, NATO Under Attack, Why the Western Alliance Can Fight Outnumbered and Win in Central Europe Without Nuclear Weapons," (Durham: Duke University Press, 1984), p. 123.

10. James E. Toth, COL., USMC, Higher Direction of Military Action, (2d DRAFT) National Defense University Course "Joint and Combined Operations at the Operational Level of War." (Washington, D.C.: July 1986), p. 120.

11. Karl von Clausewitz, On War, trans. & ed. Michael Howard and Peter Paret, (Princeton: Princeton University Press, 1976), p. 357.

12. US Army, FM 100-5, Operations, (Washington, D.C.: US Army, May 1986), pp. 23-26. The ten imperatives mentioned in this passage are: (1) ensure unity of effort, (2) anticipate events on the battlefield, (3) concentrate combat power against enemy vulnerabilities, (4) designate, sustain, and shift the main effort, (5) press the fight, (6) move fast, strike hard, and finish rapidly, (7) use terrain, weather, deception, and OPSEC, (8) conserve strength for decisive action, (9) combine arms and sister services to complement and reinforce, (10) understand the effect of battle on soldiers, units, and leaders.

13. United States Department of Defense, "Rationalization, Standardization Within NATO," A report to the US Congress (Washington, D.C.: 28 Jan 1978), Appendix A.

14. US Army Command and General Staff College, FC 100-15 Corps Operations, (Ft. Leavenworth, Kansas: March 1984), p. 4-13.

15. Edward N. Luttwak, "How to Think About Nuclear War," Commentary, (August 1982), p. 22. These figures are based on 1982 unclassified data. Currently the force ratios in each category are higher for Warsaw Pact forces ie., some sources esti-mate a 6-12:1 WP advantage in artillery/indirect fire weapons.

16. G. Jacobs, "Air-Land Battle 2000," Asian Defense, vol. 10, (October 1983), p. 42.

17. Op. cit., FC 100-15, p. 2-14.

18. The Germans and Italians considered the area west of Gazala as Cyrenaica and the area east of Gazala as Marmarica.

19. James Lucas, Panzer Army Africa, (London: Presidio Press, 1977), p. 31.

20. Correlli Barnett, The Desert Generals, (Bloomington: Indiana University Press, 1982), pp. 64-65. A good explanation of the Cyrenaica Command is provided by Barnett on these pages. Also provided is an adequate synopsis of the Cyrenaica defenses from the British point of view.

21. Op. cit., Lucas, p. 26.

22. Erwin Rommel, The Rommel Papers, ed. B.H. Liddell Hart, (New York: Harcourt, Brace & Co., 1953), p. 108.

23. Barrie Pitt, The Crucible of War, Western Desert 1941, (London: Jonathan Cape, 1980), p. 258.

24. Kenneth J. Macksey, Afrika Korps, (New York: Ballantine Books, 1968), p. 38.

25. John Hixson and Benjamin F. Cooling, Combined Operations in Peace and War, unpublished, (Carlisle Barracks, Pa.: US Military History Institute, US Army War College, 1982), p. 201.

26. Ibid., pp. 206-207.

27. Burkhard Mueller-Hillebrand, Germany and Her Allies in World War II: A Record of Axis Collaboration Problems, (Frederick, MD.: University Publications of America, 1980), p. 85.

28. Op. cit., Hixson, p. 202.

29. Mario Fenyo, "The Allied Axis Armies and Stalingrad," Military Affairs, vol. 29, No. 2, (Summer 1965), pp. 57-72.

30. Earl F. Ziemke, Stalingrad to Berlin: The German Defeat in the East, (Washington, D.C.: US Army Center of Military History, 1984), p. 38.

31. F. W. von Mellenthin, Panzer Battles, (Norman: University of Oklahoma Press, 1956), p. 158.

32. Ibid., p. 166.

33. Ibid., p. 188.

34. Op. cit., Fenyo, p. 67

35. Op. cit., von Mellenthin, p. 204.

36. Op. cit., Hixson, p. 354.

37. Op. cit., FC 100-15, p. 1-7.

38. Pat Mitchell, Maj. Gen., Canadian Forces, "Increasing the Combined Operational Effectiveness of NATO Forces: The Role of the Military Agency for Standardization," NATO Review, vol. 32, No. 1, (January 1984), p. 19.

39. Op. cit., Benz, p. 473.

40. P.C. Medenbach, COL., US Army, "Comparison of US Abrams (M1) and GE LEOPARD 2 Tanks," Fact Sheet, NO. F-07-82 (Federal Republic of Germany: US Army TRADOC Liaison Office, 22 April 1982), p. 3. This exercise was conducted with six officers from the German Armor school. These officers were experts on the LEOPARD 2. Comments are provided in this fact sheet on their impressions of the M1 tank.

41. Op. cit., Hixson, p. 351.

42. Op. cit., Jacobs, p. 53.

43. Op. cit., FC 100-15, p. 1-7.

44. Op. cit., Hixson, p. 353.

45. Op. cit., FM 100-5, p. 10.

46. Thomas N. Kriwanek, Operational Employment of the Modernized Force, MMAS Thesis, (Ft. Leavenworth, KS: US Army Command and General Staff College, May 1985) p. 106.

47. Ibid., p. 105.

BIBLIOGRAPHY

Books

Barnett, Correlli. The Desert Generals. Bloomington: Indiana University Press, 1982.

Clausewitz, Karl von. On War. Trans. and ed. Michael Howard and Peter Paret. Princeton: Princeton University Press, 1976.

Hadley, Arthur T. The Straw Giant, A Report from the Field, Triumph and Failure: America's Armed Forces. New York: Random House, 1986.

Handel, Michael I., ed. Clausewitz and Modern Strategy. Totowa, New Jersey: Frank Cross, 1986.

Hart, B.H. Liddell. Strategy. New York: Praeger Publishers, Inc., 1967.

Irving, David. The Trail of the Fox. New York: Avon Books, 1977.

Lucas, James. Panzer Army Africa. London: Presidio Press, 1977

Macksey, Kenneth J., Maj. Afrika Korps. New York: Ballantine Books, 1968.

Macksey, Kenneth J. Rommel: Battles and Campaigns. London: Cox and Wyman, LTD., 1979.

Manstein, Eric von. Lost Victories. Novato, California: Presidio Press, 1982.

Mellenthin, F.W. von. Panzers Battles. Norman: University of Oklahoma Press, 1956.

Mellenthin, F.W. von and Stolfi, R.H.S. NATO Under Attack, Why the Western Alliance Can Fight Outnumbered and Win in Central Europe Without Nuclear Weapons. Durham: Duke University Press, 1984.

Mitcham, Samuel W. Triumphant Fox, Erwin Rommel and the Rise of the Afrika Corps. New York: Stein and Day, 1984.

Mueller-Hillebrand, Burkhard. Germany and Her Allies in World War II: A Record of Axis Collaboration Problems. Frederick: University Publications of America, 1980.

Pitt, Barrie. The Crucible of War, Western Desert 1941. London: Jonathan Cape, 1980.

Rommel, Erwin. The Rommel Papers. ed. B.H. Liddell Hart, New York: Harcourt, Brace & Co., 1953.

Schmidt, Heinz Werner. With Rommel in the Desert. London: George G. Harrap & Co., LTD., 1951.

Slim, Sir William, Field Marshal, British Army. Defeat Into Victory. London: Casell & Co., LTD. 1956.

Strawson, John. The Battle for North Africa. New York: Charles Scribner's Sons, 1969.

Ziemke, Earl F. Stalingrad to Berlin: the German Defeat in the East. Washington, D.C.: Center of Military History, US Army, 1984.

Government Documents

United States Department of Defense. "Rationalization/ Standardization Within NATO" A Report to the U.S. Congress. Appendix A to DOD report, 28 Jan 78.

Periodicals and Articles

Allen, James R., General, USAF. "Airlift for the 80's." Defense 83, July 1983, pp. 16-21.

Allen, Ralph L., COL., US Army. "Piercing the Veil of Operational Art." Parameters, Journal of the US Army War College, vol. XVI, No. 4, Winter 1986, pp. 23-29.

Armstrong, Jerry N., LTC., US Army. "Heavy Divisions in AirLand Battle: Mind-set Must be Attack, not Defend." Army, February 1984, pp. 14-26.

Atkeson, Edward B., MG, US Army. "The Options in Europe: Flexibility is the Key." Army, May 1985, pp. 22-29.

Backhofen, Joseph E., Jr. "Armor Technology." 5 parts Armor, May-June 82: pp. 39-42; Sep-Oct 82: pp. 35-37; Mar-Apr 83: pp. 18-20; May-June 83: pp. 38-42; Jan-Feb 84: pp. 21-25.

Benz, K. G. "Fire and Maneuver--the German Armoured Corps and Combined Arms Operations." International Defense Review, 17, April 1984, pp. 473-478.

Blackwell, James A., Jr. "In the Laps of the Gods: The Origins of NATO Forward Defense. "Parameters, Journal of the US Army War College, vol. XV, No. 4, Winter 1985, pp. 64-75.

Borawski, John. "Confidence and Security Building Measures in Europe. "Parameters, Journal of the US Army War College, vol. XVI, No. 4, Winter 1986, pp. 68-75.

Bracken, Paul. "The NATO Defense Problem." ORBIS: A Journal of World Affairs, Spring 1983, pp. 83-105.

Burniece, Joseph R. and Hoven, Paul A. "Soviet Heavy Tanks." Armor, Mar-Apr 83, pp. 21-25.

Bunce, Peter L., SFC., US Army. "The Soviet Reaction to a Flank Threat." Armor, Nov-Dec 1985. pp. 28-31.

Cimbala, Stephen J. "Flexible Targeting, Escalation Control, and War in Europe." Armed Forces & Society, vol. 12, No. 3, Spring 1986, pp. 383-400.

Conner, Albert Z., MAJ and Poirier, Robert G. "Soviet Wartime Tank Formations." Armor, May-June 83, pp. 19-25.

DeVries, Raul T., LTC. "Maneuver and the Operational Level of War." Military Review, Feb 1983, pp. 13-34.

Dick, Charles J. "Soviet Operational Concepts." Military Review, Part 1, vol. LXV, No. 9, Sep 1985, pp. 29-45; Part 2, vol. LXV, No. 10, Oct 85, pp. 4-19.

Doerfel, John S., LTC. "The Operational Art of the AirLand Battle." Military Review, May 1982, pp. 3-10.

Doughty, Robert A., MAJ. "The Evolution of US Tactical Doctrine, 1946-1976." Leavenworth Papers, No. 1, August 1979.

Fenyo, Mario. "The Allied Axis Armies and Stalingrad." Military Affairs, vol. 29, No. 2, Summer 1965, pp. 57-72.

Fulghum, David. "Allies Strive to Bridge Gaps in Operations: International Army Staff Talks Aim at Commonality of Goals, Supplies on European Battlefield." Army Times, 47th year No. 9, 13 Oct 86, pp. 47-48.

Gabel, Christopher R. "Evolution of US Armor Mobility." Military Review, March 1984, pp. 54-63.

Gay, Mark P. MAJ., US Army. "Soviet and US Operational Styles of War." Military Review, vol. LXV, No. 9, September 1985.

Garner, F. "The Survival Probability of a Tank in Action." International Defense Review, vol. 17, 1984, pp. 609-614.

Hall, Wayne M. MAJ., US Army. "A Theoretical Perspective of Air-Land Battle Doctrine." Military Review, vol. LXVI, No. 3, March 1986, pp. 32-43.

Halloran, Joe. "Command and Control Interoperability." Military Review, vol. LXVI, No. 10, October 1986, pp. 38-49.

Hamilton, Andrew. "Redressing the Conventional Balance: NATO's Reserve Military Manpower." International Security, vol. 10, No. 1, Summer 1983, pp. 111-136.

Hines, John G., LTC., US Army. "Soviet Front Operations in Europe - Planning for Encirclement." Dynamics of Battle, Course Readings for Course 3, School of Advanced Military Studies, AY 86-87.

Hines, John G. and Peterson, Philip A. "Is NATO Thinking Too Small? A Comparison of Command Structures." International Defense Review, No. 5, 1986, pp. 563-572.

Hoff, Stuart S., LTC., US Army. "Command Organization for an Overseas Theater of Operations." Military Review, August 1951, pp. 10-20.

Hoffman, Wilfried. "Is NATO's Defense Policy Facing a Crisis?" NATO Review, August 1984, pp. 1-7.

Holder, L.D., LTC., US Army. "Training for the Operational Level." Parameters, Journal of the US Army War College, vol. XVI, No. 1, Spring 1986, pp. 7-13.

Holder, L.D., LTC., US Army. "Maneuver in the Deep Battle." Military Review, May 1982, pp. 55-60.

Holly, John W. MAJ., US Army. "The Forgotten Dimension of AirLand Battle." Military Review, vol. LXV, No. 8, August 1985, pp. 18-25.

Jacobs, G. "Air-Land Battle 2000." Asian Defense, vol. 10, October 1983, pp. 38-42.

Jenkins, D.H.C. "Firepower for Fast Force Vehicles." International Defense Review, vol. 16, 1983, pp. 1595-1601.

Karber, Philip A. "The Strategy: In Defense of Forward Defense." Armed Forces Journal International, May 1984, pp. 27-50.

Klaffus, Ernst, BG, FRG. "The Infantry--Thoughts on Weapons and Protection." NATO's Sixteen Nations, vol. 28, Dec 83-Jan 84, pp. 36-44.

Lancaster, Michael S., MAJ. "The Armor Force in the AirLand Battle." Armor, Jan-Feb 1983, pp. 26-32.

Lancaster, Michael S., MAJ., and Clemens, John. "AirLand Battle Defeat Mechanisms." Armor, Jan- Feb 83, pp. 35-37.

Leuer, Kenneth C., BG. "The Air-Land Battle, 1984-2001 and Beyond." Defense Science 2000+, vol. 2, December 1983, pp. 39-44.

Loginov, M., COL., Soviet Army. "Tanks on the Defensive." Soviet Military Review, June 1983, pp. 13-15.

Loginov, M., COL., Soviet Army. "Tanks on the Offensive." Soviet Military Review, April 1983, pp. 18-20.

Lopez, Ramon. "The AirLand Battle 2000 Controversy--Who is Being Short-Sighted?" International Defense Review, vol. 16, 1983, pp. 1551-1556.

Lebow, Richard Ned. "The Soviet Offensive in Europe: The Schlieffen Plan Revisited." International Security, vol. 9, No. 4, Spring 1985, pp. 44-78.

Luttwak, Edward N. "How to Think About Nuclear War." Commentary, August 1982, pp. 21-28.

Mack, Hans-Joachim, GEN., FRG. "Conventional Defense Improvements." NATO's Sixteen Nations, vol. 30, No. 6, October 1985, pp. 16-27.

Maurer, John H. and McCormick, Gordon H. "Surprise Attack and Conventional Defense in Europe." ORBIS: A Journal of World Affairs, Spring 1983, pp. 107-126.

Meehan, John F. III., COL., US Army. NATO and Alternative Strategies." Parameters, Journal of the US Army War College, vol. XVI, No. 1, Spring 1986, pp. 14-23.

Merzlyak, L., COL., Soviet Army. "IFVs (Infantry Fighting Vehicles) on the Offensive." Soviet Military Review, July 1973, pp. 30-33.

Mitchell, Pat, Maj. Gen., Canadian Forces. "Increasing the Combined Operational Effectiveness of NATO Forces: The Role of the Military Agency for Standardization." NATO Review, vol. 32, No. 1, January 1984, pp.16-19.

Mountcastle, John W. LTC., US Army. "On the Move: Command and Control of Armor Units in Combat." Military Review, vol. LXV, No. 11, November 1982, pp. 14-39.

Morony, Sir Thomas, GEN, British Army. "Allies Are Different." Parameters, Journal of the US Army War College, vol. XVI, No. 4, Winter 1986, pp.9-14.

Newell, Clayton R.,LTC., US Army. "Exploring the Operational Perspective." Parameters, Journal of the US Army War College, vol. XVI, No. 3, Autumn 1986, pp. 19-25.

Peters, Ralph, 1LT, US Army. "Attacking the Attacker." Armor, May-June 83, pp. 30-33.

Petrukhin, G., COL., Soviet Army. "NATO Strike Forces in Europe." Zarubezhnoye Voyennoye Obozreniye (Foreign Military Review), No. 12, December 1985, pp. 7-15.

Piaz, Massimo Dal, COL., Italian Army. "Armor in Europe--A New Perspective." Armor, Jan-Feb 84, pp. 11-14.

Posen, Barry R. "Measuring the European Conventional Balance: Coping with Complexity in THREAT Assessment." International Security, vol. 9, No. 3, Winter 1984-85, pp. 47-88.

Record, Jeffery. "Operational Brilliance, Strategic Incompetence: The Military Reformers and the German Model." Parameters, Journal of the US Army War College, vol. XVI, No. 3, Autumn 1986, pp. 2-8.

Reinhardt, Hellmuth. "Voluntary Service in the German Army and the Armies Allied With Germany in World War II." World War II German Military Studies, vol. 23, Part X, Special Topics; ed. Donald S. Detwiler, London: Garland Publishing, Inc., 1979.

Richardson, William R., GEN., US Army. "FM 100-5: The AirLand Battle in 1986." Military Review, March 1986, pp. 4-11.

Rofmistrov, P., CM., Soviet Army. "The Greatest Tank Engagement." Soviet Military Review, July 1983, pp. 18-19.

Sandrart, Hans-Henning von, LTG., FRG. "Forward Defense- Mobility and the Use of Barriers." NATO's Sixteen Nations, vol 30, No. 1/85, Feb-Mar 1985, pp. 37-43.

Schneider, Wolfgang. "Uprating the M1 Tank." International Defense Review, October 1986, pp. 1497-1500.

Smith, Susan. "Main Battle Tanks Vie for Speed, Firepower, and Range." Defense Systems Review, vol. 1, October 1983, pp. 26-31.

Sutten, Charles G., Jr., LTC., US Army. "Command and Control at the Operational Level." Parameters, Journal of the US Army War College, vol. XVI, No. 4, Winter 1986, pp. 76-83.

Stuckey, John D. "Echelons Above Corps." Parameters, Journal of the US Army War College, vol. XVI, No. 4, Winter 1986. pp. 15-22.

Taylor, Royce R., LTC (Ret). "The Best Tank Ever Built." Armor, Jan-Feb 1982, pp. 33-37.

Tuttle, Henry S. MAJ., US Army. "Is AirLand Battle Compatible With NATO Doctrine?" Military Review, vol. LXV, No. 12, December 1985, pp. 4-11.

Van Der Vlis, Arie, COL., Dutch Army. "AirLand Battle in NATO, A European View." Parameters, Journal of the US Army War College, vol. XVI, No. 2, Summer 1984, pp. 10-14.

Villahermosa, Gilberto, CPT., US Army. "T-80: The Newest IT Variant Fires a Laser-Guided Missile." Armor, July-Aug 1986, pp. 38-39.

Vlahos, Michael. "Strategy and the Status of Sealift." Journal of Defense and Diplomacy, March 1984, pp. 18-23.

Walt, Stephen M. "Alliance Formation and the Balance of World Power." International Security, vol. 9, No. 4, Spring 1985, pp. 3-43.

Warford, James M., CPT., US Army. "T-64, IT-122, and IT-130: The Soviet Advantage." Armor, Sep-Oct 1985, pp. 40-43.

Military Manuals and Circulars

Armed Forces Staff College. Joint Staff Officers Guide. Pub 1, Norfolk, Virginia: July 1986.

Department of the Army. DA PAM 20-230, Russian Combat Methods in World War II. Washington, D.C.: Center of Military History, November 1950.

Toth, James E., COL., US Army. Higher Direction of Military Action. (2d Draft) Joint and Combined Operations at the Operational Level of War, Washington, D.C.: National Defense University, July 1986.

US Army. FM 100-1, The Army. Washington, D.C.: US Army, 14 August 1981.

US Army. FM 100-5, Operations. Washington, D.C.: US Army, May 1986.

US Army. FM 100-15, Corps Operations. (Final Draft). Washington, D.C.: US Army, 25 February 1985.

US Army. FC 100-16, Echelons Above Corps. Washington, D.C.: US Army, July 1983.

US Army Combined Arms Combat Developments Activity. FC 100-16-1, Theater Army, Army Group, and Field Army Operations. Ft. Leavenworth, Kansas: US Army, 18 December 1984.

US Army Command and General Staff College. FC 71-100, Armored and Mechanized Division and Brigade Operations. Ft. Leavenworth, Kansas: US Army, May 1984.

US Army Command and General Staff College. FC 100-15, Corps Operations. Ft. Leavenworth, Kansas: US Army, March 1984.

US Army Command and General Staff College. FC 100-34, Operations on the Integrated Battlefield. Ft. Leavenworth, Kansas: US Army, July 1984.

US Army Command and General Staff College. FC 101-34, Command and Control on the AirLand Battlefield. Ft. Leavenworth, Kansas: US Army, July 1984.

Monographs and Unpublished Works

Center For Land Warfare. From the Vistula to the Oder: Soviet Offensive Operations- October 1944- March 1945. Carlisle Barracks, Pa.: US Army War College, Art of War Symposium, 19-23 May 1986.

DeFrancisco, Joseph E., COL., US Army. "Operational Art and the Corps in the US Army." US Army War College Military Studies Program Paper, Carlisle Barracks, Pa.: US Army War College, 21 April 1986.

Diaz, Alfred M., COL., US Army. "Improving NATO's Military Posture." US Army War College Military Studies Program Paper, Carlisle Barracks, PA.: US Army War College, 22 April 1985.

Elder von Loew, Gerd A., COL., West German Army. "Forward Defense in Central Eurpope- An Operational View." US Army War College Military Studies Program Paper, Carlisle Barracks, PA.: US Army War College, 7 April 1986.

Higgins, George A. MAJ., US Army. Operational Tenets of Generals Heinz Guderian and George S. Patton, Jr. MMAS Thesis, Ft. Leavenworth, Kansas: US Army Command and General Staff College, May 1985.

Hixson, John, LTC., and Cooling, Benjamin F., Dr. Combined Operations in Peace and War. Carlisle Barracks, Pa.: US Military History Institute, US Army War College, 1982.

Kriwanek, Thomas M. MAJ., US Army. Operational Employment of the Modernized Force. MMAS Thesis, Ft. Leavenworth, Kansas: US Army Command and General Staff College, May 1985.

Lusey, Rodney S. MAJ., US Army. Operational Principles: A Study General Omar Bradley and Field Marshal Eric von Manstein in World War II. MMAS Thesis, Ft. Leavenworth, Kansas: US Army Command and General Staff College, May 1985.

Romjue, John L. From the Active Defense of AirLand Battle: The Development of Army Doctrine 1973-1982. Ft. Monroe, Va.: Historical Office US Army TRADOC, Tradoc Historical Monograph Series, June 1984.

FACT SHEETS

Dauber, Peter F., COL., US Army. "Training of German Army Panzer Grenadier (Mechanized Infantry) NCO's." US Army TRADOC Liaison Office, FRG., No. F-17-84, 14 November 1984.

Dauber, Peter F., COL., US Army. "The Inspizent System in the German Army." US Army TRADOC Liaison Office, FRG., No. F-07-85, 14 June 1985.

Dauber, Peter F., COL., US Army. "Integrated Combat Service Support in the German Army." US Army TRADOC Liaison Office, FRG., No. F-09-85, 15 August 1985.

Dauber, Peter F., COL., US Army. "FORWARD DEFENSE- The Measure of All Things in the German Army." US Army TRADOC Liaison Office, FRG., No. F-16-85, 1 October 1985.

Medenbach, P.C., COL., US Army. "Comparison of US Abrams (M1) and GE LEOPARD 2 Tanks." US Army TRADOC Liaison Office, FRG., No. F-07-82, 22 April 1982.

Medenbach, P.C., COL., US Army. "GE Infantry Fighting Vehicle (IFV) for the 'Nineties'." US Army TRADOC Liaison Office, FRG., No. F-05-82, 1 April 1982.