Defense Science Board Task Force

on

Mobility

September 2005

Office of the Under Secretary of Defense
For Acquisition, Technology, and Logistics
Washington, D.C. 20301-3140

This report is a product of the Defense Science Board (DSB).

The DSB is a federal advisory committee established to provide independent advice to the secretary of defense. Statements, opinions, conclusions, and recommendations in this report do not necessarily represent the official position of the Department of Defense.

This report is unclassified.

OFFICE OF THE SECRETARY OF DEFENSE
3140 DEFENSE PENTAGON
WASHINGTON, DC 20301-3140

DEFENSE SCIENCE
BOARD

MEMORANDUM FOR UNDER SECRETARY OF DEFENSE (ACQUISITION, TECHNOLOGY, AND LOGISTICS

SUBJECT: Report of the Defense Science Board Task Force on Mobility

I am pleased to forward the final report of the Defense Science Board Task Force on Mobility. In this report the task force identifies the future mobility capabilities needed for rapid force projection (deploying joint forces to an operational area) and sustainment (supporting deployed forces and other entities that will participate in a campaign).

The task force makes three principal sets of recommendations for addressing the particularly critical need for the U.S. military to quickly move sufficient heavy and/or medium land forces into an area of conflict to gain and sustain the momentum of initial operations.

- ***Capability Acquisitions.*** Investments now in intermediate staging bases, more and improved force and sustainment pre-positioning and high-speed, intratheater vessels capable of austere port access could add significant new capabilities to enable land force deployments to meet a variety of contingencies. Incremental investments in aerial tankers and possibly in strategic airlift should complement the major capability investments.

- ***Research and Development Efforts.*** The task force recommends initiating a research and development (R&D) program for a high-speed transoceanic vessel with the capability to access austere ports. The task force also recommends pursuing an R&D program to develop a high-capacity, "super-short takeoff and landing" aircraft designed to meet joint requirements for intratheater airlift and to be sea-base connector.

- ***Management Improvements.*** Changes to deployment and distribution processes should focus on delivering capabilities rather than commodities. Changes to the management structure behind them must also complement investments in mobility assets: creating joint logistics commands for the regional Combatant Commanders (COCOMs), assigning deployment as well as distribution process ownership to Transportation Command (TRANSCOM) and assigning it the mission to develop the future architecture of the mobility system of systems.

I endorse the recommendations of the task force and encourage you to read their report.

William Schneider, Jr.
Chairman

OFFICE OF THE SECRETARY OF DEFENSE
3140 DEFENSE PENTAGON
WASHINGTON, DC 20301-3140

DEFENSE SCIENCE
BOARD

MEMORANDUM TO THE CHAIRMAN, DEFENSE SCIENCE BOARD

SUBJECT: Report of the Defense Science Board Task Force on Mobility

The attached report responds to the February 20, 2004 Terms of Reference tasking: "to identify the acquisition issues in improving our strategic mobility capabilities."

The ability to project joint forces over great distances is a basic strength of the U.S. military. In the past, however, the *speed* of force projection has not been as critical to campaign success and the achievement of U.S. national security objectives as it is today. Both the 2001 and 2005 National Defense Strategy objectives place greater emphasis than in the past on the nation's worldwide commitments, increasing the demand for responsive forces capable of simultaneously conducting major combat operations and supporting lesser contingencies that may require rapid force application. These changes will place a greater emphasis on the capabilities required to project power rapidly from the continental United States and forward locations. Air and maritime forces have inherent force projection capabilities to meet this demand; land force projection depends upon strategic mobility forces and processes. The task force focused mainly upon land force projection since it is the most challenging.

In this report the task force adopts a 'system of systems' approach to identify the future mobility capabilities needed for rapid force projection (deploying joint forces to an operational area) and sustainment (supporting deployed forces and other entities that will participate in a campaign). The task force makes three principal sets of recommendations: capability acquisitions; research and development (R&D) efforts; and process improvements to enable mobility forces to respond to the increasing demands placed upon them by the challenging strategic environment.

Capability Acquisitions. Investments now in intermediate staging bases; more and improved force and sustainment pre-positioning; and high-speed, intratheater vessels capable of austere port access could add significant new capabilities to enable land force deployments to meet a variety of contingencies. These investments need to be complemented by incremental investments in aerial tankers and possibly in strategic airlift.

Specifically, the task force recommends the department: acquire the capability to rapidly deploy heavy and/or medium land forces by pre-positioning afloat sets of first-line equipment for three complete Army Brigade Combat Teams (BCTs) with

sustainment – in addition to the three programmed Marine sets; add attack, assault, and cargo helicopters to both the Army and Marine Corps pre-positioned sets to provide tactical mobility; pursue the Joint High-Speed Vessel program to enable austere port access for the prepositioned BCTs and for intratheater operational maneuver and sustainment missions; retain the option of acquiring additional C-17s beyond the 180 now programmed; and direct Transportation Command (TRANSCOM) and the Navy to analyze how to replace the sealift capabilities of both the eight Fast Sealift Ships and the aging vessels in the Ready Reserve Force.

Research and Development. This report argues that a particularly critical need for the U.S. military is the ability to quickly move sufficient heavy and/or medium land forces into an area of conflict to gain and sustain the momentum of initial operations. The task force recommends an adequately funded research and development program to determine whether it is feasible to develop an affordable high-speed sealift vessel capable of deploying heavy/medium forces to areas of operation with only austere ports. The task force also recommends that the department support the Air Force's AMC-X program to develop a super-short takeoff and landing aircraft that meets jointly developed performance requirements. This aircraft should be the replacement for the C-130 and could become a primary connector for sea-base operations.

Helicopters have been and are likely to continue to be essential to mission success. In Afghanistan, Iraq, and other interventions in austere environments their capabilities have been crucial. The department should continue to modernize vertical take-off and landing and/or short take-off and vertical landing aircraft to increase unrefueled range, payload, and reliability. As part of its modernization effort, the department should undertake a vigorous R&D program to evaluate the feasibility of fielding a 25-ton vertical-lift capability with an unrefueled range of 250–500 nautical miles to enable more options for operational maneuver.

The task force also supports research and development necessary for adding a seabasing capability with an at-sea transfer capability in sea state 4 for one Marine expeditionary brigade)/medium Army brigade size force.

Process and Management Improvements. Operations Enduring Freedom and Iraqi Freedom have highlighted the need to overcome chronic mobility challenges in deployment and distribution processes that diminish DOD's ability to make effective use of expensive mobility platforms. The task force recommends that the secretary of defense designate TRANSCOM as the "deployment and distribution" process owner and the architect of the future transportation system of systems, with appropriate acquisition and funding authorities to carry out its responsibilities for these missions. By designating TRANSCOM as DOD's deployment process owner, the Secretary of Defense would give responsibility for both deployment and distribution to the command charged with operating the department's defense transportation system in peace and war. The separation of command of TRANSCOM from Air Mobility Command should relieve concerns about the joint perspective of the Commander, TRANSCOM.

The task force also recommends that the secretary of defense direct establishment of joint logistics commands in the regional combatant commands (RCCs) to manage joint logistics resources for the joint forces. It is time to legitimize the need for this capability to manage joint theater distribution and deployment functions and to exercise the combatant commander's directive authority in logistics by creating joint logistics commands via defense or chairman of the Joint Chiefs of Staff directive. That directive should lead to the development of the necessary structure, common processes, and training for the joint logistics commands.

The recommendations noted above are the task force's principal results. Chapter 5 of the report contains several other recommendations for capability acquisitions, R&D efforts and process improvements. Taken together, the task force believes their implementation will lead to more capable mobility forces to support joint operations.

William G. T. Tuttle, Jr
General USA (Ret)
Task Force Chairman

This page intentionally left blank.

TABLE OF CONTENTS

TABLE OF CONTENTS I
EXECUTIVE SUMMARY 3
I. Introduction 3
II. Findings 7
III. Principal Recommendations 20
IV. Conclusion 21
CHAPTER 1. STRATEGIC AND OPERATIONAL CONTEXT AND METHODOLOGY 23
I. Introduction 23
II. The Strategic Context 24
III. A Demanding Strategy 25
IV. New Importance of Old Lessons 27
V. End-to-End Framework 28
CHAPTER 2. MOBILITY TECHNOLOGIES 31
I. Overview 31
II. Sealift Technology 33
III. Airlift technology 45
IV. Vertical Take-off and Landing & Short Take-off and Vertical Landing (VTOLs & STOVLs) 52
V. Ground transport and airdrop technologies: overland 58
CHAPTER 3. DEPLOYMENT AND SUSTAINMENT OPERATIONS 64
I. Introduction 64
II. Strategic intertheater movements 66
III. Intratheater Operational Movements 86
IV. Flow of Sustainment – the Distribution Process 90
V. Movement to Tactical Assembly Areas or Combat Locations 91
VI. Support of Major Combat Operations –An Example 93
VII. Recommendations 97
CHAPTER 4. DEPLOYMENT AND SUSTAINMENT PROCESSES 100
I. Global Posture and Basing Structure 100
II. Deployment Process Owner 101
III. Theater-level Command and Control and the DDOC 108
IV. Findings and Recommendations 111

CHAPTER 5. RECOMMENDATIONS 113
I. Capability Acquisitions 113
II. Process Improvements 121
III. Management Improvements 122
APPENDIX I. TERMS OF REFERENCE 125
APPENDIX II. TASK FORCE MEMBERSHIP.....127
APPENDIX III. BRIEFINGS RECEIVED 129
APPENDIX IV. SEA STATE CONDITIONS.....131
APPENDIX V. TECHNICAL DESCRIPTIONS OF AIRCRAFT IN THE FIXED-WING INVENTORY.....132
I. C-17 and C-17ER 132
II. C-5B 138
III. C-130E/H/J/J-30 Hercules..... 140
IV. Aircraft Transportability Criteria..... 146
APPENDIX VI. TECHNICAL DESCRIPTIONS- VTOLS AND STOVLS.....148
I. Stowed Rotor System..... 149
II. Lift Fan Systems 150
III. Ejector Systems 151
IV. A Compound System 151
APPENDIX VII. COMMAND AND CONTROL — A JOINT LOGISTICS COMMAND153
APPENDIX VIII. ACRONYMS 160

EXECUTIVE SUMMARY

I. INTRODUCTION

For a decade and a half the focus of defense strategy and operations has been shifting, with an "expeditionary" mindset gradually replacing an emphasis on "defend in place." Moreover, since 2001, the "expeditionary" concept has become the basis of the national defense strategy for waging the global war on terrorism. The expeditionary strategy is associated with operational concepts requiring rapid force application once a decision is made to engage. Rapid force application, in turn, demands the timely arrival of air, maritime, and land forces in the combat area so that their combined effects result in early seizure of the initiative and the build-up of momentum to defeat the enemy swiftly in major combat operations or to achieve objectives in other operations.

The ability to project joint forces over great distances is a basic strength of the U.S. military. In the past, however, the *speed* of force projection has not been as critical to campaign success and the achievement of U.S. national security objectives as it is today. In this report the task force identifies the future mobility capabilities needed for rapid force projection (deploying joint forces to an operational area) and sustainment (supporting deployed forces and other entities that will participate in a campaign).[1]

The task force took an "end-to-end" perspective in examining the mobility capabilities of U.S. forces, evaluating the activities that take place at home stations, distribution centers, sea- and airports, and intermediate bases as well as transport assets (strategic and intratheater). As is the case for other defense capabilities, one must think of mobility forces as representing both an element of the joint force *and* a "system of systems" in its own right. This system of systems comprises platforms, support equipment, and infrastructure, complemented by the processes, information systems, policy,

1. Mobility forces support many other types of operational commitments also.

doctrine, training, organizational arrangements, and other "soft" components needed to produce effective and efficient capabilities.

The principal question the task force has addressed is, what are the components of the mobility forces' system of systems that enable the projection and sustainment of the forces necessary to achieve campaign objectives with an acceptable degree of risk? The task force has also examined the processes of force projection and sustainment that influence the effectiveness and efficiency of the mobility system and proposes improvements to bring these processes into better alignment with the demands of U.S. strategy. Maritime and air forces can deploy much of their combat power with little need for mobility forces; land forces are the major user of mobility forces. Enabling land force projection to become as timely as maritime and air force projection in order to create the necessary joint force effects was a principal focus of the task force.

This report argues that a particularly critical need for the U.S. military is the ability to move sufficient heavy and/or medium land forces quickly into an area of conflict to gain and sustain the momentum of initial operations. There is no silver bullet here. The oft-suggested idea of high-speed, transoceanic sealift capable of delivering these forces cannot be considered an option except in the long term (about 25 years hence) because of the immaturity of technologies.

However, investments now in intermediate staging bases, more and improved force and sustainment pre-positioning and high-speed, intratheater vessels capable of austere port access could add significant new capabilities to enable land force deployments and meet a variety of contingencies. These investments need to be complemented by incremental investments in aerial tankers and possibly in strategic airlift. Changes to deployment and distribution processes—which at present remain largely sequential, linear, scheduled, and focused on delivering commodities instead of capabilities—and to the management structure behind them must also complement investments in mobility assets.

Methodology and Metrics

In examining potential solutions to the military's current and future mobility-related challenges, the task force took advantage of scenarios developed as exercises by the Joint Staff and United States Joint Forces Command (JFCOM). The task force devised possible courses of action that applied to three different time periods: the present, a time approximately 12 years hence, and the long term, defined as 25 years out. The scenarios provided the task force with plausible strategic and operational contexts in which to assess various possible combinations of mobility forces and basing. They also helped in assessing the operational benefits of different technological developments in airlift and sealift and in the information and knowledge systems required for the effective employment of those assets. The task force understands that scenario development continues and that they eventually will include other challenging operations. Thus, the task force did not limit the context of its assessments to present scenarios; rather it took a wider view.

The task force reasoned that since the principal mission of mobility forces is to project and sustain air and land combat power, then the principal elements of combat power, the brigade combat team (BCT)[2] and tactical fighter squadron, could serve as metrics. As its measure of mobility capabilities, the task force used the number of (heavy, medium, and light) BCTs that could be deployed to an area of operations in a given period of time. While oversimplified, these metrics provide more meaningful measures of the contribution of mobility forces to operations than does the traditional metric, "million ton-miles per day."

The Strategic Context

The briefings the task force received painted the following picture of the future global national security situation.[3] A wide variety of potential national and transnational adversaries will possess the

2. As used here, the term, "BCT", includes both Army brigade combat teams and the regimental combat team elements of a Marine Expeditionary Brigade (MEB). The MEB also contains an air wing and support elements (a total of 15,000-17,000 personnel).
3. Appendix III lists the briefings received by the task force.

capabilities and motives to do major harm to the United States, its allies, and its national interests. Allies and friends will have their own important national interests and strategies, which may be significantly different from those of the United States or of other allies. Fluid coalitions and alliances formed to address shared interests, and strategies of the moment, will be of great importance.

Rapidly developing crises will require a rapid response by U.S. forces across the globe, and some of these crises will occur in areas with little or no U.S. force presence and with relatively undeveloped infrastructure—meaning primitive ports, roads, and airfields. The lack of infrastructure will impede rapid forcible entry. Furthermore, anti-access and area-denial measures could impair such infrastructure as exists in the event that forcible entry is necessary and significant limitations on overflight rights and access to bases may exist.

In response to this global environment, the objectives of both the 2001 and 2005 National Defense Strategy[4] have placed greater emphasis than in the past on the nation's worldwide commitments, including homeland security. This strategy increases the demand for responsive mobility forces as do the Department of Defense's 10-30-30 stretch goals. The task force understands that these goals are not requirements, but rather desirable outcomes. These goals represent the ability to seize the initiative in a conflict in any theater within 10 days of a decision to initiate a campaign, defeat the adversary within a total of 30 days, and reconstitute and redeploy within another 30 days. In addition, DoD is modifying the character of forward-based forces, repositioning heavy brigades from Europe and Korea to North America, and positioning air and maritime assets in critical regions, which requires that more forces be deployed from the continental United States (CONUS).

While not specifically stated, the objectives of the National Defense and Military Strategy certainly envision the need to prepare for both major combat operations (MCO) and lesser contingencies, as well as carrying on the global campaign against terrorist leaders and

4. The National Defense Strategy of the United States of America (March 2005)

organizations. The task force notes that the Defense Strategy objectives of securing strategic access, retaining freedom of access for key regions and strengthening alliances and partnerships enable mobility systems to support joint forces in both major combat and lesser contingency operations.

II. FINDINGS

These missions place heavy demands on mobility capabilities. Conducting MCO while sustaining mobility support to other combatant commanders (COCOMs) creates the greatest demands. While the task force has focused on this mission, it is also concerned about the mobility implications of future lesser contingencies that may require simultaneous rapid force applications.

Mobility Challenges in Major Combat Operations

The objectives of major combat operations — to seize the initiative rapidly and defeat the enemy swiftly — place extraordinary demands on the responsiveness, synchronization, and availability of mobility forces and assets. To a lesser extent, the need for rapid action also applies to other contingencies involving potential armed conflict. The task force reasoned that seizing the initiative in the first days of a campaign would require air superiority and the neutralization of enemy air defenses and surface-to-surface missile threats. A notional campaign would involve the following actions:

- Employment of aerial tankers and strategic airlift to establish and maintain an air bridge to the region, deployment of land-based tactical air elements, maintenance of operational momentum, and insertion and sustainment of special operations forces.
- In order to produce the necessary joint force effects, planning might require forcible entry of an airborne brigade task force to seize and secure airfields. The operation may require reinforcements by heavier elements.
- It appears that DoD can establish a sea-basing capability in the 12-year period that could project and sustain a brigade

in the area of operations. This capability could allow reinforcement of initial forces even given anti-access measures and without overloading C-17 capacity.

- Positioning, during the same limited time period, carrier strike group(s) would help set the conditions for land operations and, possibly, expeditionary strike group(s) with Marine expeditionary units for amphibious operations to acquire access to a seaport.
- Reinforcement of the initial entry forces with heavy/medium brigade task forces would begin as soon as possible in order to sustain the momentum of these condition-setting and initial entry operations and accomplish the campaign objective. However, enemy access-denial measures could prevent or delay employment of pre-positioned heavy and/or medium brigade combat teams that could otherwise move to the area of operations rapidly to reinforce initial entry forces.
- In some scenarios, initial forcible entry may not be necessary; still, rapid reinforcement (in this case of forward-deployed allied and/or U.S. land forces) by heavy/medium brigades would represent a major requirement.
- Sustainment operations would need to commence at the time of initial entry and proceed simultaneously with reinforcement throughout the operation. Both land and sea bases would provide the sources of sustainment support, and thus intratheater airlift and sealift connectors to the combat area would be required.

Deployment from CONUS – Current and High-Speed Sealift

Deploying the same units from CONUS would take at least 30 days with current sealift– an operation probably adequate for later reinforcing and rotational forces. The difference in CONUS deployment times lies in the 4 to 5 days required to assemble vessels from reduced operational status and simultaneously move units to ports of embarkation, 2 to 4 days to load the vessels, 16 to 17 days for

the transit to the combat region with programmed sealift, 2 to 4 days for debarkation, and 4 to 5 days for joining troops with their equipment and preparing for employment – a total of 28 to 35 days.

Some have promoted the concept of high-speed (40 knots or better), transoceanic sealift as a major part of the solution to the time-lag problem of reinforcing land forces. CONUS-based high-speed sealift with the capability to access austere ports could provide a valuable addition to pre-positioned forces. Estimates suggest that each flight of four or five vessels could transport a medium or heavy brigade combat team to an operational area in United States Central Command (CENTCOM) or United States Pacific Command (PACOM) from CONUS in less than 15 days[5] and disembark it ready for employment. The vessels could then take on intratheater missions or cycle to deliver follow-on forces or sustainment. The vessels would also provide a method for staging interventions in locations too far from pre-positioned forces or where it was impractical to use them.

The task force investigated the feasibility of this option and concluded that the capability is not achievable over the next 10 to 15 years, although constructing an initial vessel for experimentation and proof of concept is possible in that time frame. The technical barriers to attaining the desired vessel are large. Substantial research and development (R&D) will be necessary to understand what is possible. It is, however, reasonable to assume that a fleet of such vessels could be available within a 25-year period if R&D resolves technical barriers.

The task force believes that DoD should initiate such an R&D program to determine technical feasibility and likely costs. The regional COCOMs and United States Transportation Command (TRANSCOM) must provide data on likely port conditions to enable ship design. The Army and Marine Corps must collaborate with Navy designers to make decisions about trade-offs involving range, payload, and operational characteristics. The R&D program should foster efforts to understand two major technology issues: how to

5 . Two days to assemble vessels and move units to ports, one day to load, six-seven days transit to the theater ISB, one day to bring troops aboard, one day transit to the area of operations, one day to disembark. Total: 12-13 days.

reduce friction drag efficiently and how to enable access to austere ports. The recently released Office of Naval Research (ONR) broad agency announcement for the austere (port)-access high-speed ships (AAHSS) concept begins the R&D effort to resolve these issues.

While the task force believes that such vessels could be a valuable addition to mobility force capabilities, DoD must grapple with two principal issues: technical feasibility and program affordability. The task force believes that the technical issues can be resolved, but the research, development, testing and engineering (RDT&E) program could cost $5–10 billion over the next 15 or 20 years. It estimates that the vessels will be sized for a payload of approximately 4,000 tons, somewhat more than the projected weight of a Future Combat System battalion task force. Given this assumption, a rough estimate of acquisition cost is $1.2–1.5 billion for the lead vessel and $1.0–1.2 billion for each succeeding vessel.[6] Each brigade combat team would require approximately three vessels. A programmed capability to deploy four brigade combat teams—about 12 vessels— would thus entail a commitment of $12.2–14.7 billion plus $2.4 billion for 20-year life cycle sustainment and $5-10 billion for R&D, a total of $19.6–27.1 billion. The question for the department is, could that capability be achieved nearly as well by afloat pre-positioning of the same brigade sets using existing large, medium speed roll-on/roll-off (LMSR) vessels and, if necessary, high-speed intratheater vessels for austere port access?

Rapid Reinforcement Through Afloat Pre-Positioning

Until a high-speed vessel such as the one described above becomes available, pre-positioning is the sole component of the mobility system that can deliver employable heavy/medium land forces early in a campaign. Equipment sets for brigade combat teams can be pre-positioned on land or afloat. Land-based pre-positioning is a less expensive option, but afloat pre-positioning offers the department more strategic agility, enabling it to reposition sets *between regions* as a situation requires. The Army's planned land-based sets could most likely be shuttled to an area of operations or

6. Estimated from Navy's designs for an intratheater vessel and the larger RSLS.

intermediate staging base (ISB) by the pre-positioning ships following the discharge of their sets.

Vessels with the six Army and Marine afloat pre-positioned BCT/MEB[7] sets could move, like carrier and expeditionary strike groups, to the region before military operations are decided. In some scenarios, the COCOM could move pre-positioned sets to a deep-draft port in the operational area, disembark them, air deploy their personnel, and execute reception, staging, onward movement, and integration operations (RSOI) at that location. This would be the preferred situation—in the best case, enabling the joint force commander to employ heavy/medium forces even within the first 10 days after initial entry. If the enemy were to deny access to deep-draft ports, the COCOM could conduct the RSOI at an intermediate staging base in the region and employ high-speed intratheater vessels to move the units to austere ports in the operational area.

Since the pre-positioned brigade combat teams would be the first heavy/medium brigades to fight, they should have first-line equipment. Historically, the Army has not pre-positioned its best equipment. Expeditionary thinking suggests that it must. The task force believes that sufficient modern equipment exists in the Army to fill required brigade combat team sets; even if it means that some units must share equipment for training.

The Army and Marine pre-positioned sets should also contain sufficient helicopters -- attack, assault, and cargo—to provide both combat power and support to the force. There are skeptics about the feasibility of pre-positioning helicopters. However, the department evaluated the concept two decades ago in Europe as part of the POMCUS (pre-positioned materiel configured to unit sets) concept and found it to be achievable. The need is apparent, and the technology is available.

7. Three Marine MEBs and two Army BCT now programmed, and additional Army BCT planned plus two land-based BCT sets and sustainment.

Coping With Anti-Access and Area Denial

The case for rapid reinforcement through afloat pre-positioning presently rests on the assumption that a deep-draft port (or ports) would be available in the relevant operational area—a port such as Kuwait's commercial port. It also assumes the ability to airlift troops to a nearby airport, join them with their equipment, and conduct reception, staging, onward movement, and integration in a relatively secure environment. But what if the joint force commander encounters anti-access and area-denial measures that prevent access to those ports?

Here, the task force saw the potential to employ the proposed joint high-speed (intratheater) vessel (JHSV) in conjunction with a theater ISB. The JHSV program is currently in the final stage of requirements determination and program development to meet joint requirements for high-speed intratheater sealift to support operational maneuver, special operations, and other missions. The program results from the experience of the Army, Marine Corps, Navy, and Special Operations Command over the past three years (and continuing into the present) with four leased commercial fast ferries, three of which were modified to adapt them to military requirements.

Where access to a deep-draft port is not possible, the COCOM could move afloat pre-positioned sets and high-speed vessels to an intermediate staging base (ISB) in the region (within 1000–1500 nautical miles of the operational area), fly troops to the ISB, disembark the equipment, and then marry equipment and troops and arm, fuel, and embark the units.

An estimated 20–30 of these approximately 1,000-ton-payload JHSVs could transport a heavy/medium brigade (or Marine regimental) combat team, with sustainment, in a single lift. These vessels could transit the sea between an ISB and the ports in a combat area in 24–36 hours and discharge their brigade combat team units ready for employment in about two hours at a secured port near their objective area–perhaps no more than five to six days after arriving at the ISB. The vessels could then return to the staging base to embark a

second brigade combat team and sustainment, cycling for the remaining brigades and sustainment until it became feasible to establish port operations that could accommodate deep-draft sealift. The vessels could also assist in the contemporaneous debarkation of a sea-based Marine brigade.

The task force does not underestimate the complexity of executing this ISB-JHSV option. It certainly requires the detailed planning, training, and discipline of the most complex airborne assault and the flexibility to synchronize the tasks and deal with the inevitable problems. Nevertheless, this option could provide the joint force commander with a deployment tool that could mitigate access denial until a major port could be secured.

There is much work yet to be done in JHSV program development. Data on ports and infrastructure must be gathered and the regional COCOMs must be engaged to refine the concept of employment and provide design criteria for the vessel. However, the Army, Navy, and Marine Corps have gained over three years of relevant experience through the use of the experimental vessels (the theater-support and high-speed vessels [TSV/HSV]), and the Navy is managing the competitive development of the similar "littoral combat ship," suggesting that the JHSV may be a relatively low-risk program.

The experimental TSV/HSVs, while helping to satisfy needs for high-speed intratheater sealift, also have significant operational limitations, which the JHSV program should strive to minimize. Those vessels were constructed to be fast ferries, not transoceanic vessels capable of delivering their payloads in all weather and sea states. At present, they must seek shelter in rough weather, which limits operational flexibility. Ultimately these vessels probably need to be large enough to tolerate such weather and the sea states it brings. The vessels' range limitations of 1,000–1,500 nautical miles with capacity payloads should also be expanded to make them more suitable to the extended distances that characterize both PACOM and CENTCOM and minimize refueling requirements. The range limitations now require operational compromises and would limit

the choice of intermediate staging or support bases that could serve expected operational areas.

Further, the aluminum construction of the TSV/HSVs does not yet have a well understood and extensive performance history over time in the kinds of operating conditions envisioned for the JHSV. The JHSV design will need to consider the extent to which acceptable hull life and low maintenance require more rugged construction that has characterized the aluminum fast ferry designs of the TSV/HSVs. The limited payload capacity of the TSV/HSVs have allowed no larger units than company team–sized units to embark, requiring several vessels to move even a battalion task force. Finally, JHSV design must consider the characteristics of likely austere ports and the ability to rapidly disembark cargo.

The "analysis of alternatives," which is the next stage in JHSV program development, should address these issues.

Strategic Airlift and Aerial Tankers

A second issue that concerned the task force was the adequacy of the force level of organic strategic airlift and aerial tankers. The complexities of dealing with the global war on terrorism make the airlift and tanker forces major weapons systems, not simply transport means. Defense commitments and unpredictable future intervention needs push airlift and tankers into the role of "first responders."

The organic strategic airlifter and aerial tanker fleets have a host of tasks to perform to support forces in seizing the initiative in major combat operations. It will take time to generate the necessary airlift and tanker assets. While generating the assets, TRANSCOM must begin to deploy and maintain the strategic air bridge (with some Civilian Reserve Air Fleet [CRAF] help), support deployment of land-based tactical air expeditionary forces, and deploy initial land force units to forward bases to prepare for seizure of airfields in the operational area. In addition, TRANSCOM must maintain support for other COCOMs' deterrence missions, allow the department to safeguard weapons of mass destruction and to enable recovery from inadequate planning or shortfalls in execution of ongoing operations.

And this list does not include commitments resulting from future lesser contingencies, some of which could require simultaneous rapid force applications not related to major combat operations. If these possibilities are omitted from force-sizing scenarios, one does not see a complete picture of the risks of having too few airlift and tanker aircraft.

The task force's concern is that production of the C-17 ends in 2008, and a decision to terminate production at the force level of 180 means that the department will live with the fleet of 100 aging C-5s and 180 C-17s (augmented by the CRAF) for many years to come in an environment of great uncertainty. At the same time, the task force understands that each year of additional production beyond 2008 would represent an additional $2.4 billion acquisition and $2–3 billion life cycle cost commitment, which the department must weigh against other war-fighting capabilities it could not acquire. However, in view of the prominence of organic strategic airlift in enabling rapid response to crises, the task force believes it is prudent to keep options open for the acquisition of additional C-17s.

Support of the array of probable operations suggested by the National Defense Strategy should also motivate the sizing of the aerial tanker fleet as recapitalization proceeds. The task force agrees with the conclusions of the DSB's February 2004 study on the tanker replacement programs and supports the efforts now in place to develop a deliberate strategy for the fleet's recapitalization.

Replacing the C-130

A third issue concerns the need to replace the venerable C-130 over the longer term. The task force noted the continued aging and programmed reduction of this fleet of aircraft, so essential to sustainment operations. The department should meet immediate needs for replacement through the C-130J series program and/or a selective life-extension program. For the longer term, the task force concluded that the Air Force's proposed "AM-X" R&D program has the potential to yield a more capable aircraft than the C-130 in payload, range, and assault support capabilities to meet joint intratheater airlift requirements and to operate as a sea-base

connector. The department should fund the development program for this aircraft and establish a jointly manned group to create and manage its concept of operations throughout its development cycle.

Commercial Components of the Mobility System of Systems

The transformation to an "expeditionary" mindset underscores the value of the capacity commercial airlift, sealift and the Ready Reserve Force (RRF) offer in augmenting organic lift. Operations Iraqi Freedom and Enduring Freedom have demonstrated the persistent need for air- and sealift operations supporting large force rotations and ongoing sustainment and reconstruction operations. With the increasing competitive pressures on the commercial air carriers, the task force believes that a stable funding stream for the CRAF carriers will be key to assuring their availability in crises.

Process Improvements

Operations Enduring Freedom and Iraqi Freedom have also highlighted the need to overcome chronic mobility challenges in deployment and distribution processes that diminish DoD's ability to make effective use of expensive mobility platforms. The conversion of traditional deployment operations into a major element of global maneuver must drive a revision of traditional deployment and distribution processes to squeeze out delays endemic to the present planning and execution processes and assure effective use of the nation's investment in mobility forces.

Joint force employment concepts are becoming more simultaneous, distributed, continuous, decentralized, and focused to achieve desired campaign effects. Yet, force projection and sustainment operations remain largely sequential, linear, scheduled, and centralized—delivering commodities instead of capabilities. A process has begun to develop modular joint forces with sustainment packages to provide capabilities needed for multiple contingencies. These capabilities include pre-positioned supplies afloat and the performance standards, knowledge systems, training, and oversight—especially JFCOM and TRANSCOM ability to access unit

data— necessary to maintain readiness. That process needs support from the leadership — joint and service.

Processes require change to make deliberate and crisis deployment and sustainment planning and execution more adaptable: The COCOMs must be able to adapt the force flow continuously and rapidly to changing needs. They must be able to alter the sequencing and timing of force and sustainment packages to fit changing campaign plans. The concept of "deploy, employ, sustain"–that the three must be simultaneous operations—demands better management capabilities. Improved modeling and simulation tools for collaborative planning and execution monitoring could considerably improve adaptive joint force employment and mobility planning. Such tools would allow the assembly of the force capability modules for employment planning, matching them with mobility assets, pre-positioned supplies, and host-nation infrastructure and support capabilities. The result would be deployment plans, movement directives for force modules to embarkation points, and loading plans for mobility platforms. The regional COCOMs and JFCOM and TRANSCOM all need the resources—intellectual and financial—to develop modern modeling, simulation, and emulation tools in order to facilitate improved planning.

Also badly needed are processes to facilitate the assembly of the force modules and their accompanying and follow-on sustainment packages to better manage "fort-to-port" movement and coherent embarkation. Essential to managing these processes is a knowledge system for continuous monitoring and feedback on the execution of the processes. Similarly, TRANSCOM needs better tools to facilitate rapid generation of its airlifters and tankers to make effective use of these scarce assets.

Critical to the success of the "deploy-employ-sustain" concept is the need to shorten or eliminate delays imposed by reception, staging, onward movement, and integration of forces. Especially in the combat areas, forces must disembark vessels or exit aircraft ready to fight or perform support missions if they are to enable rapid decisive operations. This criterion must override the efficient use of

vessels and aircraft in deployment operations so that delays in configuring forces for combat do not penalize their employment.

Deployment and distribution processes must overcome two other delay factors that could cause loss of operational momentum and impede effective prosecution of combat operations:

- "Pauses" caused by a flow of sustainment into the force that does not keep up with consumption.
- Gaps in the flow of forces into the theater. This task requires both process change and appropriate platform selection, e.g., the pre-positioned force option described above.

Making deployment and distribution options and their consequences visible to the joint force commander is a prerequisite for managing these processes. Anticipating and/or reacting to inevitable problems with a smooth flow requires continuous situational understanding and options for redirecting flow in case of interruptions.

Management Improvements

Transformation to an "expeditionary" mindset also requires adapting the management structure for deployment and distribution operations. The task force had great difficulty in understanding the current responsibilities and authority for overseeing force projection and sustainment processes. "Deployment process ownership" remains confused; distribution process ownership, although only a year into its assignment to TRANSCOM, has enabled rapid progress in both deployment and distribution operations in Central Command. A more useful structure would result from recognizing JFCOM's "force provider" responsibilities for readying joint force modules for deployment, but transferring deployment planning and oversight functions to TRANSCOM. The latter must integrate deployment and distribution into a common mobility resources base. The result would be to make TRANSCOM the "deployment *and* distribution process owner." Such a structure would continue to recognize the preeminent position of the regional COCOMs in

determining timing and sequencing of force module deployments to match employment plans within campaign strategy.

The task force found that no DoD organization possesses the responsibility or authority to assess the changes made over the past four years in defense strategy and operational concepts and to develop a plan for necessary changes to what are, in fact, *joint mobility systems* to enable achievement of the strategic goals. The task force believes that a joint command with the requisite expertise and legitimacy should have this responsibility. TRANSCOM meets those criteria. It can be the architect of a future mobility system of systems—integrating deployment and distribution tasks and developing programs for new or improved platforms as well as processes that make more effective use of mobility assets. It needs the authorities appropriate to the mission (including some funds for acquisition, although not necessarily to the level of Special Operations Command's (SOCOM) authority and leaving platform acquisition to the services.) Assigning this responsibility and authority to TRANSCOM provides clear evidence of the department's commitment to managing joint resources jointly. The task force has heard concerns that TRANSCOM would act mainly as a platform advocate. That need not happen, given clear guidance, relevant resources, and explicit accountability.

The task force found encouraging the evolution toward acceptance of a joint theater logistics management capability recommended by the 1998 DSB Summer Study. It is time to legitimize the need for this capability to manage joint theater distribution and deployment functions and to exercise the COCOM's directive authority in logistics by creating joint logistics commands for the regional COCOMs via Defense or Chairman of the Joint Chiefs of Staff directive. That directive should lead to the development of the necessary structure, processes, and training for each of the regional COCOMs.

III. PRINCIPAL RECOMMENDATIONS

Chapter 5 contains the complete set of recommendations made by this task force. The following are the principal recommendations for those capabilities that DoD could acquire in the near term and for the research and development efforts for other transforming mobility capabilities. The task force considers these capabilities to be technically feasible for longer term acquisition, but recommends sustained research and development to confirm its assessments. The terms of reference asked for an assessment of two management issues. The recommendations coming from those assessments complete the following set of principal recommendations.

Capability Acquisitions

1. Acquire the capability to rapidly deploy heavy and/or medium land forces by pre-positioning afloat sets of first-line equipment for three complete Army BCTs with sustainment—in addition to the three programmed Marine MEB sets. Add attack, assault, and cargo helicopters to both the Army and Marine Corps pre-positioned sets to provide tactical mobility.

2. Pursue the Joint High-Speed Vessel program for intratheater operational maneuver and sustainment missions with an objective of acquiring sufficient vessels to transport at least one brigade combat team in a single lift from a theater ISB to austere ports in an area of operations.

3. Keep open the option to acquire additional C-17s beyond the 180 now programmed.

4. Direct TRANSCOM, in conjunction with the Navy, to analyze how best to replace the sealift capabilities of both the eight Fast Sealift Ships and the aging vessels in the Ready Reserve Force (with consideration given to recapitalization, reliance on the Maritime Security Program, or some combination).

Principal Research and Development Efforts

5. Initiate an R&D program for a high-speed transoceanic vessel with the capability to access austere ports—the austere (port)-access high-speed ships (AAHSS described earlier).

6. Pursue an R&D program to develop a high-capacity, "super-short takeoff and landing" aircraft designed to meet joint requirements for intratheater airlift and to be sea-base connector. It should be the potential replacement for the C-130 in the 25-year period.

Management Improvements

7. The Secretary of Defense should designate TRANSCOM as the "deployment and distribution" process owner and the architect of the future transportation system of systems, with appropriate acquisition and funding authorities to carry out its responsibilities for these missions.

8. The Secretary of Defense should direct establishment of joint logistics commands in the regional COCOMs to manage joint logistics resources for the joint forces.

IV. CONCLUSION

The task force believes that implementing the recommendations that follow from its findings will contribute to a mobility force more capable of supporting the defense strategy and the operational concepts developed from it.

This page intentionally left blank.

CHAPTER 1. STRATEGIC AND OPERATIONAL CONTEXT AND METHODOLOGY

I. INTRODUCTION

The under secretary of defense (acquisition, technology, and logistics) has tasked the Defense Science Board Task Force on Mobility to identify acquisition issues associated with improving the strategic mobility capabilities of the U.S. military. (The terms of reference are in appendix I.) At present, the United States possesses a capable set of mobility forces. The role of the task force has been to examine the gaps that exist between present and programmed capabilities, and those implied as needed in the future National Defense Strategy.

The task force examined the roles to be played by mobility forces in achieving the campaign objectives implied in U.S. strategy and focused on two that would most influence future capabilities: force projection (deploying joint forces to an operational area) and force sustainment (supporting deployed forces and other entities that will participate in the campaign). Other missions that mobility forces perform include the movement of humanitarian supplies, the transport of sensitive cargo, and noncombatant evacuation.

The task force adopted an "end-to-end" perspective that considered both transport assets (strategic and intratheater, operational and tactical) and the activities that take place at home stations, distribution centers, sea- and airports, and intermediate bases. As is the case for other defense capabilities, one should think of mobility forces as both an element of the joint force as well as a "system of systems" in its own right. This system of systems comprises platforms, support equipment, and infrastructure complemented by the processes, information systems, policy, doctrine, training, organizational arrangements and people, as well as other "soft" components needed to produce effective and efficient capabilities.

The principal question the task force has addressed is, what are the components of the mobility forces system of systems that enable the projection and sustainment of the forces necessary to achieve campaign objectives with an acceptable degree of risk? The task force has also examined the processes of force projection and sustainment that influence the effectiveness and efficiency of the mobility system and proposes improvements to bring these processes into better alignment with the demands of U.S. strategy.

This section briefly describes the strategic and operational context that guided our work. Chapter 2 covers the task force's analysis of mobility platform technologies that are or could become part of the mobility system of systems. Chapter 3 covers the employment of these platforms and associated infrastructure while Chapter 4 analyzes the mobility processes for force projection and sustainment. Chapter 5 summarizes the task force's recommendations.

II. THE STRATEGIC CONTEXT

The task force made the following assumptions about the future strategic environment, based on materials provided by the department and briefings received during its deliberations.

The future will be characterized by a wide variety of potential national and transnational adversaries with capabilities and motives to do major harm to the United States, its allies, and its national interests. Rapidly developing crises will require swift response by U.S. forces across the globe and in a wide variety of contingencies: humanitarian missions, peacemaking missions, major combat operations, and operations to counter weapons of mass destruction (WMD).

Such operations may take place in areas with little or no U.S. force presence and that possess less-developed infrastructure. The lack of major ports, roads, and large airfields in such areas could impede rapid forcible entry. Furthermore, anti-access and area-denial measures could impair such infrastructure as exists in the event forcible entry is necessary.

Finally, some allies and friends may possess important national interests and strategies that are significantly different from those of the United States or of other allies. Fluid coalitions and alliances formed to address shared interests, and associated strategies of the moment, may well be of great importance. Such coalitions will last only so long as those common interests remain intact. Significant limitations on overflight rights and access to bases could well impede the mobility of U.S. forces. Thus, the United States will confront the problem of projecting its military power across oceanic distances with, at times, no friendly bases on the other side of the Atlantic or Pacific. It will then have to support and sustain that military power from the continental United States.

III. A DEMANDING STRATEGY

In response to this global environment, the National Defense Strategy has evolved to place greater emphasis on the nation's worldwide commitments, including homeland security. Inevitably this change has increased the demand for responsive mobility forces. In addition, DoD is modifying the character of forward based forces, restationing heavy brigades from Europe and Korea to North America and positioning air and maritime assets in critical regions, which requires that more forces be deployed from the continental United States (CONUS).

The March 2005 National Defense Strategy defines four strategic objectives:

1. Secure the United States from direct attack.
2. Secure strategic access and retain freedom of action for key regions.
3. Strengthen alliances and partnerships.
4. Establish security conditions conducive to a favorable international order.

The department also articulated a National Military Strategy that sets forth three military objectives:

1. Protect the Untied States against external attacks and aggression.

2. Prevent conflict and surprise attack.

3. Prevail against adversaries.

While not specifically stated in the cited objectives, the National Defense and Military Strategy objectives certainly envision the need to prepare for both major combat operations (MCO) and lesser contingencies as well as carrying on the global campaign against terrorist leaders and organizations. The task force notes that the Defense Strategy objectives of securing strategic access, retaining freedom of access for key regions and strengthening alliances and partnerships enable mobility systems to support joint forces in both major combat and most lesser contingency operations.

These lesser contingency missions could include strike, show of force, WMD elimination, WMD interdiction, peace enforcement, small-scale search operations aimed at terrorists, and advisory support for indigenous forces. Such measures could also include larger intervention, stabilization and reconstruction operations; peacekeeping; show of force; and domestic operations involving multiple division-sized forces, land-based aircraft wings, and carrier battle groups.

More responsive and agile mobility force capabilities are a critical enabler of all of the above missions. The objectives of major combat operations — to seize the initiative rapidly and defeat the enemy swiftly—, place extraordinary demands on the responsiveness, synchronization, and availability of mobility forces. Multiple, simultaneous, high-stakes "lesser" contingencies (e.g., involving WMD) will also greatly stress these forces. Thus, the development of new and innovative mobility and logistic capabilities should be one of the department's most important emphases over the course of the next decade – fully aligned with the development of combat capabilities.

The experiences of Operations Enduring Freedom and Iraqi Freedom suggest another dimension of the mobility picture. There is a persistent need, likely to continue for a number of years, for airlift and sealift to reinforce forward deployed and initial entry forces in order to achieve the political goals for which the United States has employed combat forces. After conventional military victory, there will be a need to refocus on stability and support operations. While commercial sea- and airlift can carry much of the burden of sustainment, the rotation of forces into areas that remain only partially pacified will require DoD's mobility forces. Homeland defense could also place demands on mobility forces; they could be required for aerial refueling and transport for intra-Continental United States (CONUS) moves.

IV. NEW IMPORTANCE OF OLD LESSONS

A combination of the global security environment confronting the United States and the demanding goals it has set for major combat operations not only increases the demand for better mobility-force platforms, but heightens the need to overcome the chronic mobility process challenges that have played significant roles in previous military operations. The conversion of traditional deployment operations into a major element of global maneuver for rapid decisive operations and early combat termination requires a "wringing out" of traditional deployment processes to decrease the delays endemic in present planning and execution.

Joint force employment concepts are becoming more simultaneous, distributed, continuous, decentralized, and focused on applying capabilities to achieve desired campaign effects. Yet, force projection and sustainment operations remain largely sequential, linear, scheduled, and centralized. At present, they are oriented toward delivering commodities instead of capabilities. There are a number of areas (discussed in chapter 4) where a "wringing out" process might produce significant improvements in both effectiveness and efficiency. But the department must also encourage a transition from the current functional stove-piped approach that characterizes current mobility systems to a system of systems

approach that rests firmly on more effective use of information-age technologies and concepts.

V. END-TO-END FRAMEWORK

The processes of both force projection and sustainment will continue to require the movement of people and material from CONUS (or forward bases in the case of force projection and supply sources in the case of sustainment) through various nodes (such as ports, distribution centers, and staging areas) that are linked by strategic and intratheater airlift and sealift, and eventually overland to final theater destinations. The task force used this end-to-end framework, discussed in more detail in chapter 3, to examine alternative solution sets—or ways of providing force projection and sustainment—in a number of scenarios. These solution sets require a combination of nodes, links, force configurations, and planning and execution processes, as well as the platform technologies discussed in chapter 2.

Since the deployment of land forces represents the greatest demand on the mobility system of systems, the task force's approach has been to use the Army's brigade combat team (BCT) and the Marine Corps' regimental combat team (RCT) component of its air-ground task forces as capability measures for major combat scenarios. Thus, one can compare the solution sets for an exemplar scenario, using time requirements to project BCTs and RCTs, with their requisite support, into combat on land.

Such an end-to-end perspective facilitates the analysis of platforms; support systems (e.g., air and sea tankers); basing (sea as well as land); and the related doctrine, procedures, organizations, training, human resources, and information and knowledge processes required to form a "system of systems." Departmental decisions made about platforms and support equipment systems have the greatest acquisition implications; deployment and sustainment processes heavily influence platform effectiveness and productivity. In chapter 2, the task force examines platforms from the perspective of the productive lives of present capabilities and the potential of new technologies to provide more effective sea- and

airlift and ground mobility. The task force divided the end-to-end framework into two parts for analysis: first, employment of platforms and supporting systems and second, important force projection and sustainment processes. This analysis is described in chapters 3 and 4 respectively.

The critical enabling capabilities for the end-to-end projection and sustainment of forces are as follows:

Appropriately Configured Forces: Modular joint forces, with their own sustainment packages, that possess capabilities required for multiple contingencies; pre-positioned equipment and supplies afloat; and the performance standards, knowledge systems, training, and oversight necessary to maintain readiness.

Adaptive Joint Force Employment and Mobility Planning: Collaborative planning and execution monitoring tools to 1) allow virtual assembly of force capability modules for employment planning; 2) virtually match these modules with mobility assets, pre-positioned supplies, and host nation infrastructure and support capabilities; 3) produce deployment plans and movement directives to embarkation points; and 4) provide loading plans for the mobility platforms.

Assembly and Embarkation Processes for the Joint Forces: Processes to facilitate assembly of the force modules and their accompanying and follow-on sustainment packages; processes to facilitate "fort-to-port" movement; and coherent knowledge systems for continuous monitoring and feedback on execution of assembly and embarkation.

Platforms for Strategic Movement: Platforms (with support systems) such as transoceanic vessels, strategic airlifters, and aerial tankers that move joint force modules to the theater, facilitating debarkation in a "ready-to-fight" mode. The task force assessed feasible technological developments in these platforms in two distinct periods in the future. The first was the near term (12 years), the second 25 years in the future.

Intermediate Staging Bases (ISB): Land and sea bases that permit the joining of pre-positioned equipment with deploying equipment and

personnel in preparation for deployment into the battlespace. Force modules can also be transferred from strategic platforms to intratheater platforms at ISBs to facilitate direct entry into combat. Therefore, ISBs should contain sea- and airports for debarkation from strategic lift and embarkation of intratheater lift. ISBs can also host theater medical centers and sustainment distribution centers. These distribution centers would receive supplies from various sources and package them for direct delivery to forces. At the same time, they would transfer broken equipment evacuated from the combat area to repair centers at the ISBs as well as elsewhere in the logistic chain reaching back to North America.

Intratheater Movement: Platforms, with the necessary support systems, that move the joint force modules within the theater, for example, between ISBs and combat operations or forward operating locations. As for strategic movement, the task force examined current platforms and supporting systems as well as feasible technological developments for application in the exemplar scenarios.

Battlespace Sea and Air Access: Access for force modules. Entry points ideally would be capable of receiving large aircraft and vessels. However, realistic planning must account for operational venues with only immature facilities, and conditions exacerbated by enemy anti-access measures. In order to achieve the goal of rapid decisive operations, force modules should enter the battlespace ready for combat, with few of the "reception and staging" activities involved in previous concepts of operation.

Tactical Movement within the Battlespace: The processes and platforms required to facilitate the movement of forces and sustainment in support of ongoing military operations. For this final link in the end-to-end process, the task force focused on both current and technologically feasible platforms and processes that could meet the demands of fast-paced maneuver operations.

CHAPTER 2. MOBILITY TECHNOLOGIES

I. OVERVIEW

This chapter focuses on the platform technologies that comprise the mobility system of systems as described in Chapter 1. They are the sealift and airlift platforms that execute strategic movements and intratheater movements and the airlift and ground transport that execute tactical movements within the battlespace- also as described in Chapter 1.

Strategic Movement

The evolution of operational concepts in support of the National Defense—and now the National Military—Strategy formulations has shown the value of rapid decisive operations in achieving campaign objectives. The task force understands that a major contributor to such operations is the capability of putting a joint force in combat anywhere in the world in a matter of days. Both the air and maritime components largely have that capability. Yet only the forward pre-positioned land component (Army BCTs and Marine MEBs) could achieve such a goal.

Strategic movement of the preponderance of heavy and medium land force combat power, which will be stationed in CONUS, will require much more time—30-45 days—to deploy and be ready for combat. These forces require transoceanic sealift which is now capable of approximately 23 knots speed. To complicate the challenge, as Chapter 1 notes, sea access to the battlespace may be restricted to austere ports which present sealift cannot enter.

Since there appears to be a need for a transoceanic sealift capability for a portion of the heavy/medium land force component that combines high speed (approximately 40 knots) with the capability to access austere ports, the task force undertook to assess the immense technology challenges and implications. The next section of this chapter covers that assessment.

Strategic airlift systems are critical components of the mobility system of systems in their ability to rapidly deploy air, land, and special operations forces. The task force assessed the technological capabilities of the current fleet—principally the C-17, still in acquisition, and the C-5 which is undergoing modernization. The assessment did not assess the vitally important tanker fleet since it has been the subject of significant analysis over the past couple years. In addition the assessment covered the likely benefits and technology challenges of proposed future airlifters.

Intratheater Movement

The task force included the assessment of intratheater sealift technology within the high speed/austere port access transoceanic sealift assessment since rapid decisive land force and special operations demand the same capabilities for intratheater movements. The technology challenges also are similar.

The assessment of intratheater airlift technology follows the strategic airlifter discussion. Unlike the sealift situation, the needs for a possible aircraft to succeed the venerable C-130 differ from the strategic airlifter requirements and entail demanding technology advances. The design of airplanes to exploit "austere" airports has been a technological focus for some forty years. One concept, named AMC-X, could represent an especially welcome development, particularly if it should prove capable of operating not only from land bases, but also from the deck of carrier-size vessels in a sea base. A heavy-lift capability of that sort—something available only from a fixed-wing aircraft—could be useful not just for mobility, but also for surveillance, radio relay, and ground fire support.

The task force also briefly considered technology options for vertical take-off and landing aircraft (VTOL) for intratheater lift and tactical mobility. The discussion covers both helicopter and V-22 related technologies. The assessment also discusses the hybrid airlifter concepts which have both intra and inter theater applications.

Finally, the task force assessed technologies for ground tactical mobility and final delivery of cargo to battlespace locations either by ground transport or guided parafoils .

II. SEALIFT TECHNOLOGY

Strategic Transoceanic Sealift

Current Capabilities

The two principal vessels in DoD's organic transoceanic fleet are the Fast Sealift Ships (FSS), converted 30 year old container ships, and the Large Medium Speed Roll-on Roll-off (LMSR) vessels built or converted following the first Gulf War. Table 1 displays their characteristics and capabilities.

Designation	Speed (Knots)	Cargo (tons)	Ranges (n mi)	Draft (feet)	GrossΔ Wt.(tonnes)	Length (feet)	Beam (feet)	Cargo cap.: 000 sq ft	Inventory
FSS	30	14,200	12,000	37	55,000	950	106	165	8
LMSR	24	19,300	12,000	34	62,000	950	106	320	20

Table 1. Principal Existing Organic Transoceanic Vessels

As Table 1 indicates, the FSSs and LMSRs are capable of carrying major loads over transoceanic distances at moderate speeds in heavy seas. They deliver materiel to major, fully equipped ports found in the major trading nations, and their dimensions just permit passage through the Panama Canal. They have performed well in support of many force projection tasks, most recently in Operation Iraqi Freedom. The LMSRs also are well suited to their role as afloat prepositioning vessels (nine vessels) located close to likely areas of operation. One major advantage is each vessel's capability to lift most

of the equipment set of a restructured heavy or Stryker Army BCT as shown in Table 2.

BCT Type	Personnel		Equipment					
			Vehicles		Weight (Stons)		Area (kilo ft^2)	
	BnTF	BCT/UA	BnTF	BCT/UA	BnTF	BCT/UA	BnTF	BCT/UA
FCS	860	2,600	300	860	3,600	10,000	50	140
Stryker	1,100	3,900	390	1,070	4,000	15,000	71	300
Heavy	900	3,700	390	1,700	6,000	22,500	77	320
Light	950	3,400	380	1,350	1,800	7,400	44	180

FCS = Future Combat System (estimate) BnTF = battalion task force

BCT/UA = brigade combat team/unit of action

Table 2. Army Organization Lift Requirements

Future Capabilities: Austere (Port) Access High Speed Sealift

The FSS and LMSR have two significant disadvantages in meeting the demands for rapid deployment of these BCT from CONUS. Those are speed and the ability to access austere ports, i.e., ports with typical ship length and draft restrictions on the order of half the FSS/LMSR requirements and having poor cargo handling infrastructure.

High Speed

There are two drag components with which naval architects have to contend: *friction* (in the conventional meaning) and *wave.* The latter has to do with the radiation of surface waves, which carry energy into the far field. An inevitable consequence of ramming something through a medium at a speed greater than the natural speed of that form of motion in that medium is the radiation of energy. The blue-green color in a pool reactor is the result of photons emitted into the water at speeds greater than the speed of light in the water – they shed their excessive energy in the form of

electromagnetic radiation. The extra drag experienced by an aircraft as it transitions to supersonic speed is a member of the same family – the craft sheds its excessive energy in the form of acoustic radiation. Thus, a surface ship, operating at the air-water interface, experiences added drag if it exceeds its "hull speed." The excessive energy is shed in the form of gravity waves.

The ship situation is peculiar in that gravity waves have a nonlinear dispersion relationship, that is, the speed of propagation depends on the wavelength, as shown in the wavelength range in figure 1.

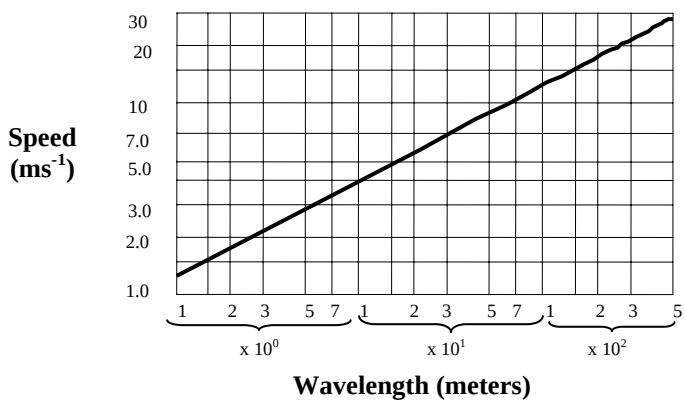

Figure 1. Wage Propagation Relationship

A ship does not couple strongly to the gravity-wave field until its speed nears the speed of the wave, the length of which is the same as the ship's. At that point, wave drag increases rapidly. *All cargo vessels operate just below the onset of that steep rise, just as all transport aircraft are subsonic*. The physical process that generates the gravity waves is the lateral displacement of water as the ship passes. Thus, the bigger the beam the greater the drag. This relationship was made precise one hundred years ago by J.H. Michell,[8] who showed, among other results, that the dependency on the beam is a square law. The contribution from the underwater portion of the hull diminishes exponentially with depth. Therefore, if a designer finds he has a

8. J.H. Michell, "The Wave Resistance of a Ship", Philosophical Magazine, Series 5, 45, pp 106-123 (1898)

wave-drag problem, he will generally slim down the hull and regain the lost buoyancy by deepening the draft. But that reduces the righting moment of the ship and creates the risk of roll instability. The cure is to go to a multihull form, which regains the restoring moment by increasing the moment arm. That is why the increasing number of high speed ferries are catamarans. And that is also why naval architects have designed SWATHs,[9] trimarans, and pentamarans.

Aside from the need for maintaining buoyancy (to support the ship), there are two strong and coupled constraints that block access to higher speeds by thinning the demihulls of a ship:

- The power lost to *friction* drag increases as the cube of speed (and the wetted area is increased by going to a multihull design).
- The need for more propulsion to overcome that friction cubic results in the need for more space for the plant. Eventually, the designer runs out of room.

Trial and error has shown that these constraints result in a rather firm upper boundary on the speed any ship can attain. *At present that upper boundary is in the low forties of knots.* There is one — and *only* one -- way in which naval architects might circumvent the boundary. That would be discovery of a means to eliminate *friction.* This possibility is not as radical as it might at first sound. Fluids such as air and certain polymers are less viscous than water. A persistent coating of a ship's hull with one of these fluids could lubricate the surface. This goal has been — and is being — pursued in every seagoing nation. So far, there have been laboratory successes, but there has yet to be a successful full-scale implementation. Thus, while drag reduction is not impossible, it has yet to occur in the naval world.

9. **S**mall **W**aterplane **A**rea **T**win **H**ull: a form of catamaran in which decoupling from the surface wave field is taken to its limit by using submerged cylinders to get the buoyancy and connecting them to the in-air hull by struts made as thin as structural issues allow.

One can gain some insight into the lack of "wiggle room" in this situation by understanding that that if a 100 percent effective lubricant were to be found — *that is, if a vessel could completely eliminate friction drag — the speed boundary would only increase to the low fifties of knots, where wave drag would again take control.* To get past that boundary would require — in addition to having a cure for friction drag — locating the buoyancy of the ship well below the air-water interface,[10] that is, creating a SWATH.[6] If such a design were possible, one could achieve a speed in the vicinity of 70 knots.

Inevitably the issue of operational cost will arise since power requirements will be considerable for high speed operation. There are only two possible cures: either to eliminate friction drag, discussed above, or to go more slowly. That second option is, of course, a normal operating practice: a high-speed capability is only exercised when there arises an urgent need, and ships of this sort would spend most of their lifetimes operating at "normal" speeds and normal efficiencies.

Austere Port Access

The task force found that the lack of a quantitative definition of the term "austere port" hampers discussion of the implications of this design criterion. A recent study that catalogued the "weak states" of potential interest to the U.S. national security sheds some light on the issue. [11] A search of the published data on the seaports in those states has shown differences in port characteristics cited by different sources so great as to make choosing a suitable ship size difficult. Further progress in ship design depends upon acquiring much better data. The task force understands that the Transportation Engineering Agency (subordinate organization within the SDDC) is developing such data.

10. This was suggested by Lord Kelvin in the nineteenth century
11. Stuart E. Eizenstat, John Edward Porter, and Jeremy M. Weinstein, "Rebuilding Weak States," *Foreign Affairs*, Volume 84, number 1 (January-February 2005), Pages 134-146; "On the Brink: Weak States and U.S. National Security," a report published by the Center for Global Development in May 2004.

On the other hand, the available data do indicate that a ship large enough to carry a battalion task force might be feasible. Larger is uniformly better – seaworthiness, payload capacity, propulsion efficiency all improve with size. Thus the major objective of the R&D effort is to learn how to design the biggest ship that can access "austere" ports—however the definition is determined.

The question of port accessibility has to include off-loading issues such as the load-bearing capabilities of piers, the presence of crane services and roll-on-roll-off ramps, the existence of road and rail connections, the accessibility of an airport, and the existence of space for staging areas. Moreover, working in austere ports will inevitably require some element of autonomous off-loading capability, a potentially important factor in facilitating rapid discharge of vessels.

In addition to a vessel ramp structure, such as the M1A1 capable ramp on one of the leased high speed ferries, *Joint Venture*, the Engineer Research and Development Center is evaluating a lightweight causeway system to facilitate rapid discharge in ports where there is insufficient draft for the vessel to use only its ramp.[12] It is currently undergoing test and is a candidate for an advanced concept technology demonstration (ACTD). While one-third scale tests completed in May met objectives, there is concern that the use of high strength tensioned fibers to connect the modules will make the causeway vulnerable to resonance effects in dynamic conditions.

A related issue encountered by the task force was the desire to embark troops on the vessel with their equipment, at least for the initial force, in order to eliminate most of the reception and staging processes when disembarking in the battlespace. However, implementing this desire would add large space and weight requirements for the life support facilities even for seven-eight day voyages. The more practical alternative would be to marry up with airlifted troops so they would have no more than a one or-at most-

12. Donald T. Resio, et al, Technical Description of the Lightweight Modular Causeway System (LMCS), U.S. Army Engineer Research and Development Center, March 2005.

two day voyage and still have the benefits of disembarking with their equipment.

High Speed Vessel Characteristics

Based on the above discussion, the major characteristics of a ship designed to serve military needs in the future are discernible:

- Hullform = catamaran or trimaran
- Size = probably bounded by port access (rather than by load requirements) at a length of less than 170 meters and an arrival draft of no more than 6.5 meters. The need for seaworthiness dictates striving for the largest possible vessel.
- Speed = probably bounded above by 45 knots
- Unrefueled range = probably around 5,000 miles
- Payload = probably no more than 4,000 tons
- Should accommodate helicopters and unmanned aerial vehicles.

Thus the major technical challenges are to determine the feasibility of building a vessel that could:

- Achieve greater transoceanic transit speed than the FSS/LMSR- on the order of 40 knots or better – negotiating heavy seas enroute.
- Be capable of accessing a significant number of the austere ports that are so prevalent in likely operational areas.
- Lift at least one significant unit set per vessel, e.g., a battalion task force (4,000-6,000 tons).

There are two major areas of major uncertainty:

- As discussed above, port characteristics of interest and their impact on ship characteristics are not at present available.

- Design and analysis tools for evaluating non-traditional hull shapes do not exist.[13]

Research and Development Requirements

At present, naval architects do not possess all of the software tools needed to design nontraditional, surface-displacement ships. The ability to measure the interface is the source of the difficulties: there is no available means to calculate the loads experienced by a ship maneuvering at high speed in an aroused sea — the slamming in the waves, for example, or the water on the deck. This assessment is particularly important in the multihull case whose form engenders unique stresses. Moreover, naval architects do not know how to address the special case of vessel performance at high speed in shallow water, a likely condition of operations in areas of interest.

Moreover, the costs of large-scale implementation of the highly innovative new ship hull and propulsion technology required to build a fleet of large, very high-speed vessels needs careful consideration. The fragile U.S. shipbuilding industry should be a participant in selecting the technologies to be pursued. The innovative hull and power technology programs should include rigorous attention to their industrial application on shipbuilding scales.

Exploration of these issues has begun with the Naval Research Laboratory's receipt of a number of offerings in response to its request for interest in February 2005. The vessel concept was entitled the "Austere (port) Access High Speed Vessel" (AAHSS). The effort must continue in order to understand the technology barriers, costs, and likely effectiveness of an AAHSS vessel.

13. Robert F. Beck and Arthur M. Reed; "Modern Computational Methods for Ships in a Seaway", Trans SNAME, 109, pp 1-51,October (2001)

Intratheater Sealift

Chapter 3 describes the background and current status of the joint Army, Navy, and Marine Corps effort to provide a high speed intratheater vessel that can serve a number of missions from operational maneuver to connecting a sea base to ports. The technical challenges to producing such a vessel are similar to those discussed above for the transoceanic vessel but less demanding since the vessel will evolve from commercial high speed ferries which the services have leased over the past few years. In both cases the need is for both high speed (approximately 40 knots attained by the ferries) and austere port access.

The joint program, Joint High Speed Vessel (JHSV), is undergoing the "analysis of alternatives" phase of the joint capability initiatives process. If approved, it will be managed by the Navy (Program Executive Office (PEO) Ships) and jointly funded by the services. The technology challenges are to adopt an affordable design that improves on the performance of the modified fast ferries (table 3).

Designation	Speed (Knots)	Cargo (tonnes)	Range (n mi)	Draft (feet)	Displacement	Length (feet)	Beam (feet)			Inventory
TSV/HSV	38	700	1,000	11.3	1872	319	7.3			
	42	350								

Table 3. Theater Support Vessel/ High Speed Vessel

The fast ferries were designed for frequent, short runs in sheltered waters. They need not carry fuel or food in the quantities needed for endurance and, since they do not carry the structural weight required for operation in heavy seas, cancellation of a TSV or HSV mission is always a risk. Appendix IV shows the relative frequency of the higher sea states in likely areas of operation. Their construction is aluminum for weight-saving transfer into payload. One of the technical

objectives of the JHSV program must be to make the vessel more robust and able to withstand heavier seas to reduce the possibility of mission delay. Like the transoceanic vessel design and the Joint Venture HSV, it should have a tank-capable ramp.

The opportunity to share technology understanding is significant since the PEO Ships also manages the Littoral Combat Ship program which has similar requirements for speed and sea worthiness.

The Army has formulated an updated set of JHSV requirements based on experience with leased vessels and on a fresh assemblage of port access data (see below). Table 4 summarizes updated data.

	SPEED (KNOTS)	CARGO (TONNES)	RANGE (NMI)	DRAFT (FEET)	LENGTH (METERS)	PAX
Acceptability Threshold	36	684	625	18	≤ 121	354
Objective	50	1134	1250	15		

Table 4. JHSV Requirements

Cargo Transfer at Sea

The operating assumptions in this technology assessment is that the vessels would normally discharge their cargo in ports, albeit austere ports. Yet the work on going related to sea basing indicates the need to consider transfer to and from other vessels at sea.

Many of the challenges described above apply also to the transfer of materiel from a sea base onto the shore when no deep draft port is available. At present vessels cannot safely transfer cargo at sea in sea state conditions greater than sea state 2. (See Appendix IV). Existing lighters are too small to be seaworthy in sea state 4 conditions, in which the naval services argue they must be able to navigate (see figure 2). Furthermore, their range, speed, and payload capabilities are inadequate for the work of a sea base. Figure 2 below illustrates why the Navy and Marine Corps see the need for the capability to

transfer cargo at sea in sea state 4 conditions to minimize the chances of delays during operations caused by high sea states. Note that in 21-44 percent of days in the three PACOM areas sea state 4 conditions exist, and 40 percent of the time for approximately four months of a year they exist in the CENTCOM area shown.

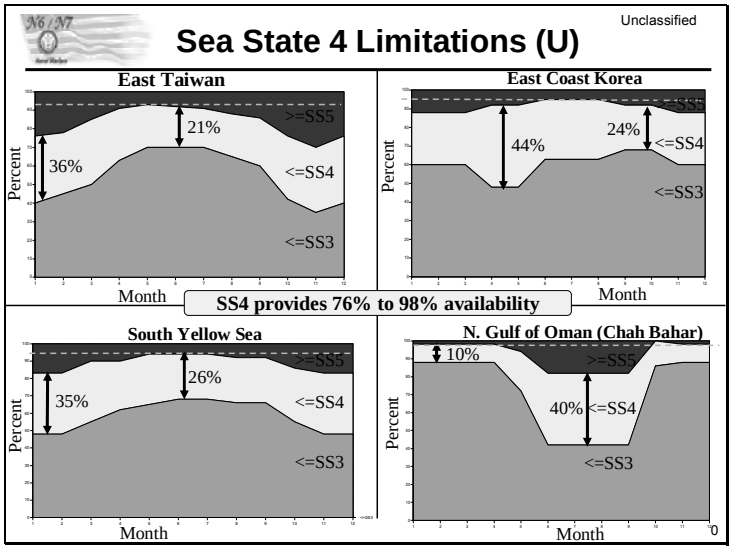

Figure 2. Distribution of Sea State Conditions by Month

Findings and Recommendations

- "Seaworthiness" and "shallow draft" are antonyms, and so are "payload" and "shallow draft." Naval architects will have to find a means of changing a seaworthy craft into a shallow draft configuration upon arrival at the distant shore, just as airplanes deploy high-lift devices (flaps) for landing.
- Likewise austere port access demands a means such as the lightweight causeway system to connect the vessel with the shore where no roll-on, roll-off ramp exists. Utilizing these

ports may also require cargo transfer at sea—in normal sea states (3 or 4).

- Each of these challenges first requires innovation and focused R&D efforts. While a complete solution may not result, the catamaran form does offer a potentially useful degree of freedom. Its thin hulls are a step in the direction of matching the heave motion of larger ships. If catamarans can deploy curtains at bow and stern, they could be converted into a surface-effect ship (SES). The deployment of inflatable extra-lift devices (e.g., salvage pontoons) might also be possible.
- Based on the above discussion on sealift technology, the task force recommends the Department take the following actions:

    1. Establish a TRANSCOM and interservice liaison link to facilitate the melding of technological and military views from all sides, including shipbuilders, in the evolution of the requirement for the AAHSS.

    2. Acquire the data needed to translate Army, Navy, and Marine Corps needs into ship characteristics for both the JHSV and AAHSS programs.

    3. Embark on a program to develop the software tools needed for the design and modeling of multihull surface displacement ships.

    4. Undertake the design of ships aimed at satisfying the joint capability initiative requirements for the JHSV and AAHSS. Leverage the technology developments and design work of the commercial high speed ferries.

    5. Encourage efforts to solve the friction-drag reduction enigma.

    6. Pursue the R&D efforts necessary to enable sea state 4 cargo transfer.

III. AIRLIFT TECHNOLOGY

As amply demonstrated during Operation Enduring Freedom and Operation Iraqi Freedom, the United States has an impressive fixed-wing airlift capability. In a period of relatively continuous conflict between 2001 and mid-2004, fixed-wing aircraft transported approximately 1.5 million military passengers and about 950,000 short tons of cargo.

The effectiveness of airlift capability depends on the availability of suitable transport aircraft, aerial refueling tankers, and airports of debarkation (APOD) that possess suitable runways, loading and unloading capabilities, and the ability to disperse cargo and passengers. Above all, management skills are needed for the system to operate as required. America's airlift system has amply demonstrated such skills over the last few years.

In addition to aircraft supplied when required by the Civilian Reserve Air Fleet (CRAF) program, the Air Force's current inventory of heavy-lift, fixed-wing transport aircraft includes C-5A, C-5B, C-141, C-17, C-17ER, and C-130 aircraft. KC-135 and KC-10 refueling aircraft support this capability.

This section will address the technology perspective on the acquisition issues related to these aircraft. The mix of aircraft is certainly programmed to change with time. The Air Force has programmed the C-141 for phasing out. The C-17, the C-17ER, and the C-5B force will remain the nation's primary heavy-lift, fixed-wing strategic air transport force. Various versions of the C-130 will remain in the inventory and will provide fixed-wing, theater-level air transport through at least 2025. Attachment A provides a technical description of the fixed-wing airlift inventory.

Programs of Record and Future Prospects

C-17

Based on the experience with other large aircraft, there is a reasonable expectation that the C-17 should remain in service past

2040. The C-17 was designed in the early 1980s and made its maiden flight in September 1991. By 2025 its design will thus be 35 to 40 years old. Although the C-17 is a more recent vintage than the C-130, a number of studies have considered both a major upgrade of the existing C-17 and a design for a next-generation strategic-airlift aircraft, the Global Range Transport (GRT), which might replace or supplement the C-17. The task force also received several briefings on the concepts for hybrid airfoil-lighter-than-air craft and noted the possibility that the Defense Advanced Research Projects Agency (DARPA) may fund an exploratory effort. The task force is skeptical about the proposed craft's operational utility.

Global Range Transport (GRT)

As currently conceived, the GRT would be a strategic airlift platform based on a blended wing body (BWB) design. It would have an unrefueled range of 3,860 nautical miles, with a 459,000-pound payload. If its payload were 157,150 pounds, its unrefueled range would be 10,840 nautical miles, allowing it to reach virtually any place on earth from the continental United States. Preliminary designs indicate that it could carry 500 troops. It could take off and land in 7,000 feet. If built, it would certainly be the largest aircraft in the world, with a maximum takeoff weight of approximately 1,375,000 pounds. If one were to assume that an aircraft of this complexity cost in the vicinity of $1,000 per pound, acquisition costs would indeed be impressive. On the other hand, if an aircraft with the postulated capabilities of the GRT were to be realized, it would represent a revolutionary increase in the mobility of the U.S. military.

The task force believes that, based on the state of current technology, the development of a GRT would require advances in many areas. BWB designs have noncylindrical fuselages and generally require increased structural weight to counter the resulting nonsymmetrical loads. Boeing has investigated ways to alleviate such problems, but further efforts appear necessary. Boeing studies have also indicated that there is a need for an improved ability to characterize stall and other dynamic phenomenon that such aircraft may encounter.

The GRT concept rests to a significant extent on the possibility of achieving an increased lift-to-drag ratio (L/D) by greatly increasing the wing area over which the flow is laminar. That would increase the craft's range, reduce fuel consumption, and allow for smaller engines. If the design can achieve the anticipated increase in L/D, it would certainly have a revolutionary impact on all aircraft design. However, some skepticism remains in the aeronautical community about the prospect of maintaining laminar flow in rain and dust clouds. Current GRT design concepts call for improved thrust, specific fuel consumption engines. A 10 to 15 percent fuel-consumption improvement appears to be required. Such improvement would be consistent with the program goals of the Integrated High-Performance Turbine Engine Technology/Versatile Affordable Advanced Turbine Engine program.

Semiboyant Heavy Lift

Some aviation theorists have put forth proposals for an ultra-large-lift aircraft that combines dynamic and buoyant lift — wings and a helium-filled structure. Design concepts call for a platform that at low forward speeds has a slightly negative buoyancy. Assuming that the large lifting structures required could be fabricated, they could lift significantly heavier loads than are feasible with other vertical lift concepts. However, the task force believes that the operational problems related to such a platform would be enormous. Wind loads while hovering would be difficult to counter. The maintenance of appropriate buoyancy as the platform weight decreases — as fuel is consumed and cargo is discharged — would be difficult. Finally, the survivability of such a platform in a hostile environment is open to question.

C-17 PREP

The goals of the C-17 Payload and Range Expansion Program (C-17 PREP), while not as ambitious as those of the GRT, could result in a significant reduction in the C-17's dependence on in-flight refueling. Phase II of the Advanced Mobility Concept Study (AMCS) proposes employment of improved engines for the C-17, which would leave the C-17's payload unchanged but would increase its

unrefueled range with maximum payload from 2,200 nautical miles to 2,670 nautical miles . The range at zero payload would increase from the current maximum range of approximately 4,600 nautical miles to 6,300 nautical miles.

The Air Force could incorporate the performance increases assumed in AMCS for the C-17 PREP into existing airframes (as was done with the Boeing 747-400). Other programs could increase the aircraft's range by increasing fuel capacity, improving the aerodynamics of the wing, and installing more fuel-efficient engines. Furthermore, stretching the aircraft fuselage and incorporating new wings and more efficient engines might increase the aircraft's range.

C-5B

The Air Force intends to modernize its C-5Bs. It has initiated an Avionics Modernization Program (AMP) for the integration of new systems. These systems include the following:

- Digital flight-control system
- Seven 6 in x 8 in flat-panel, liquid-crystal displays
- 12-channel embedded global positioning system/inertial navigation system
- Multimode receivers for the communications suite that add Aero-1 satellite communications and high frequency HF data link
- Traffic alert and collision avoidance system (TCAS) and enhanced ground-proximity warning system
- AMP will also provide the avionics necessary to comply with new international global air traffic management (GATM) requirements. The first flight of the upgraded aircraft took place in December 2002. A production contract for the first 8 kits was issued in April 2003 and for the next 18 in January 2004. First deliveries are due in 2005, and installation is scheduled for completion on all USAF C-5 aircraft by 2007.

The Air Force has also initiated a C-5 reliability enhancement and reengining program (RERP) to upgrade the aircraft's engines and pylons and improve reliability. In December 2001, the Air Force awarded a system development and demonstration (SDD) contract for the C-5 RERP, to apply the new systems to four C-5 aircraft by 2007.

Other than life extension, engine replacement, and avionics modernization programs, no efforts appear underway that will result in a radical improvement in the C-5B's cargo transport capabilities. Ultimately, development of new airframe concepts, such as those incorporated in the GRT, may lead to a replacement aircraft for the C-5B. Nevertheless, current plans call for the C-5B to be in service for the next 30 to 35 years.

C-130 and possible SSTOL replacements

As noted in attachment A, a force level of 465 C-130s was, until recently, expected through 2020. Budgetary pressures, continuation of the C130J program, and the survival of the C-130Es will determine actual force level throughout the next 15 years. By 2020, the basic C-130 design will be approximately 70 years old. A number of studies have considered the desired attributes for a C-130 replacement. Most have concentrated on designs called super-short takeoff and landing (SSTOL) aircraft.

Although designs for an in-theater airlifter vary, most involve some form of tilt-wing aircraft with four cross-coupled turbo-shaft engines, large propellers, and active flow control for high lift. All designs incorporate large landing gear for operation from rough, unpaved fields. The threshold objective of these designs is to achieve an aircraft that can take off with a ground roll of 1,000-1,500 feet (over the canonical 50-foot obstacle at the end of each runway) with a fuel-plus-cargo weight of 72,000 pounds.

Among the contributions to the Air Force AMC-X and M-X studies are proposals for a C-130J successor, which, with a fuel-plus-payload takeoff weight of 72,000 pounds and a 10-knot headwind, can achieve takeoff with a ground roll of 992 feet. These performance

characteristics would begin to make this concept compatible with shipboard operation (at least for a carrier without an island or bridge). The studies claim that the proposed aircraft can achieve takeoff with a ground roll of 635 feet with a fuel-plus-payload takeoff weight of 72,000 pounds, if the ship's speed generates a wind of 35 knots over the deck. They also claim that, if the proposed aircraft were to take off with the same payload and only half of the fuel load (and retank after takeoff), it could achieve takeoff with a ground roll of only 441 feet. The availability of an electro-magnetic [EM] catapult would reduce takeoff roll even further.

The availability of such a SSTOL aircraft with the attributes described in Air Force studies would have a major impact on the mobility of U.S. forces and on the value of the sea-base concept. Aircraft that could land and take off from a realizable ship with payloads of 46,000 pounds would allow the movement of a Stryker vehicle or International Standards Organization (ISO) containers to and from a sea base by air. Although it is likely that only one aircraft could be accommodated at a time, they would mitigate many of the problems associated with the transfer of such equipment with surface connectors.

The realization of sea-based operation of SSTOL aircraft will require the configuration of large ships without bridge or island structures that would limit the wing span of the SSTOL advances (thought to be achievable) in the following critical technologies:

- High lift
- Flight-control integration
- Propulsion
- Structures

In the area of high-lift technology, takeoff and landing performance depends on achieving active flow control, large, fast-acting flaps, and higher static thrust levels. Active flow control is at a moderate level of technological readiness. Aircraft manufacturers have completed analyses and tests of wing sections, but complete configuration flight tests have yet to occur. Flight tests of surrogate

aircraft have demonstrated wing-tilt technology. Wind tunnel testing has examined tilt and plan form optimization. Finally, tests have demonstrated fast-acting flaps in flight.

Flight-control integration technology will require that such aircraft integrate an active flow control system, aerodynamic control surfaces, engines, and propellers to achieve good low-speed control. Early simulations have been performed in these areas. V-22 experience will certainly be partially applicable. However, more extensive simulations with firm aerodynamic and propulsion data followed by flight tests will be necessary.

In the area of propulsion, one of the main problems is the need to cross-couple the engines for engine-out safety. Here, V-22 experience is extremely relevant. Unfortunately, cross-coupling adds weight and complexity to the wing and rotor design. Positive pitch and yaw control must also be established during low-speed flight.

The fuselage of an SSTOL is likely to be a large, complex structure. So far, no aircraft manufacturer has built the structures that are under consideration. Extensive use of composites will be necessary for far-term capabilities, and, while manufacturers have built composite wings, the SSTOL wing is likely to be more challenging because of its complexity and geometry.

Although the development of a high-performance SSTOL would present significant challenges, there appear to be no technological showstoppers. Nevertheless, the aircraft would require a long and expensive development process before realization of an operational capability. Given the military mobility value of such a capability, the effort should be worth the price.

Findings and Recommendations

Programs of record designed to achieve evolutionary improvements in C-17 and C-5B performance (better engines, improved avionics, greater volume, and higher speeds) will all lead to enhanced military mobility and should be implemented.

Studies of possible long-term replacements for C-17– and C-5B–class aircraft are important and continue periodically as aircraft technology undergoes significant change. Neither the GRT nor the ultra-large aircraft appear to be feasible replacements over the next two decades. Furthermore, given the capital cost of long-range fixed-wing aircraft such as the C-17 and the C-5B, the likelihood is that these aircraft will be in the inventory for a number of decades to come. With the development of improved engines in commercial aviation, the department should give priority to retrofitting improvements into these airplanes. The department should also give priority to the development of techniques that will improve load and off-load times.

The development of a SSTOL replacement for the C-130 would contribute significantly to force mobility. The achievement of a SSTOL capability would be especially important if the design of future sea-base platforms incorporated flight decks long enough and wide enough to accommodate the takeoff and landing of SSTOL aircraft with loads in the 40- to 50-thousand-pound range. There has to be close coordination of the Navy's sea-base activities and the Air Force AMC-X and MC-X to achieve mutual compatibility of the SSTOL and the sea base.

IV. VERTICAL TAKE-OFF AND LANDING & SHORT TAKE-OFF AND VERTICAL LANDING (VTOLS & STOVLS)

Current Capabilities

Both the Army and the Marine Corps CONOPS envisage widely dispersed, highly mobile units operating throughout the theater of operations. In these CONOPS, U.S. ground forces will focus on key objectives of high military or political value. Initially, they will not attempt to clear and secure the areas through which they pass en route to their objectives.

In some relatively low-intensity conflicts, it may be possible to establish traditional supply lines that move supplies and equipment and evacuate the wounded by truck convoy. However, in conflicts

such as the ongoing war in Iraq, traditional supply lines have proven vulnerable to attack by bypassed enemy units, suicide bombers, land mines, and so forth.

The ability to resupply combat forces over long distances without dependence on truck convoys is fundamental to operational concepts based on the use of highly mobile forces. This means that U.S. ground forces will become more dependent on air transport than they have been in the past.

A recent NAVAIR study provides a summary of the range and payload requirements of the heavy-lift vertical take off and landing (VTOL) aircraft; table 5 lists the data. The minimum or threshold value of the payload is 40,000 pounds, determined by the need to transport one standard (H-8.5 ft x W-8 ft x L-40 ft) ISO container. The goal value is 50,000 pounds, based on the combat loaded weight of the Stryker interim combat vehicle, which is representative of a future light tank. Ongoing studies by the Center for Naval Analysis and the Marine Corps indicate that the requirement is for an operational radius of 200 to 300 miles.

22 Sept, 2004	U.S. Marine Corps	U.S. Army	U.S. Navy	Joint Capability
Source:	CH-53X ORD	**AMT ICD**	**DSB Sea Basing & NAVAIR Quick Look**	
Mission:	OMFTS / STOM Sustain Expeditionary Force	Mounted Troop Transport & Sustainment	Access Denial Force Sustainment VERTREP/VOD/COD	Common Heavy Lift
Performance: Payload @ Radius	27,000lbs@110nm (T) 30,000lbs@110nm (O)	Mounted Troops FCS ECC Nip to 1000km O	>20 ton@300nm	24 ton@270nm (FCS @ FCC)
Hover Time	TBD	TBD	TBD	20 min
Self Deploy	TBD	2,100nm	2,100nm w/1 refuel	2,100nm
Takeoff Condition Midpoint Condition	Sea Level/103F 3,000ft/91.5F	4,000ft/95F	Sea Level/103F 3,000ft/91.5F	4,000ft/95F
Cruise Speed, kts	150 (T) 170 (O)	TBD	180 (A) 240 (G)	≥ 180 kt
Shipboard:	LHA/LHD/LHA(R) Compatible 100%(T) / 90% (O) footprint	Capable	TBD Compatible, Sea State 4	LHD / LHA(R) Compatible Sea State 4
Air Transportable	Yes C-5/C-17	No	TBD	TBD
Internal Payload: Bulk	(2) 463L w/10Klbs each	FCS in ECC	ISO Container 30@12@10(A) 40@14@12(G)	FCS in ECC
Troops	30 crash-rated seats (T) 50 w/ centerline seats (O)	Yes	TBD	TBD
Survivability:	ASE STOM in 1 period of darkness	State-of-the-Art ASE	TBD	Active/Passive & Situational Awareness
Operating & Support:	75% CH-53E O&S Costs 100%(T) / 90% (O) footprint	TBD	80% Availability	Integrated ILS Cost Target TBD
Fleet Size (est.):	154 (CH-53X ORD)	200-512	83	TBD
Schedule:	2015 IOC/2021 FOC	FCS Incr I (2012)	~2015 (1st MPFF Sqdn 2017)	FCS Increment I (2012)
Other/Comments:	Life: 10/12KFH (T/0) 10% decr in logistic footprint		TEU max 26.45 ton MILVAN max 22.4T	*Threshold (T), Objective (O)* *Acceptable (A), Goal (G)*

Table 5. Documented Heavy Lift Capabilities

The payload and range performance of current VTOL cargo aircraft are summarized in table 6. The Russian Mi-26, the largest current helicopter, is listed for comparative purposes.

Name	MTOW (kilopounds)	Payload (kilopounds)	Range (n.mi.)	Speed (knots)	Internal Hght (feet)
CH-47D Chinook	54.0	28.5	652	140	6.5
V-22 Osprey (STOVL)	47.5	15.0	515	275	
CH-53E	73.5	32.0	110	150	6.5
Mi-26 HALO	123.0	44.0	500	183	≈ 9
Sources	*Boeing.com, sikorsky.com, fas.org/man/dod-101/sys/ac/row/mi-26.htm*				

Table 6. Current VTOL & STOVL Aircraft Performance

Given a service-life-extension program for the CH-53E and acquisition of the V-22, the Marine Corps will have the ability to move substantial quantities of material. With its maximum payload of two High-Mobility Multipurpose Wheeled Vehicles (HMMWVs), the operational radius of a CH-53E is approximately 100 miles. The operational radius of an MV-22 with its maximum external load equivalent of one HMMWV is also approximately 100 miles. Without an external load, the speed of an MV-22 is twice that of a CH-53E, and thus over an extended period of time it can deliver more cargo at greater ranges than can a CH-53E.

However, these aircraft are not capable of transporting a light assault vehicle (LAV) or a heavy truck over that distance. Each weighs about 30,000 pounds. The standard ISO container weighs up to 40,000 pounds, and the Stryker vehicle, depending on configuration, weighs even more. In addition, 100 miles is probably not far enough to support the needs of ground-force mobility CONOPS. The maximum payloads of the CH-53E and MV-22 decrease with distance, especially with external loads.

Future Capabilities

Proposals have been made to extend the capabilities of the CH-53E. The current design has a 79-foot diameter rotor and can transport a 9,500-pound load 110 nautical miles. The services are pursuing designs designated as the CH-53X and the CH-53X+. They promise capabilities not achievable with the CH-53E:

- The CH-53X would retain the 79-foot diameter of the CH-53E but would operate with a disc loading of 16.3 $lbft^{-2}$ in contrast to the disc loading of 14.23 $lbft^{-2}$ used in the CH-53E. It would obviously require a higher-performance engine than the one used in the CH-53E. The proposed CH-53X design should allow the transport of a 27,000-pound load over a distance of up to 110 nautical miles.
- The CH-53X+ is designed to carry a 40,000-pound payload to a range of 250 nautical miles. It would require making major aerodynamic and structural changes to the CH-53E. Maintaining current disc loading would require a 116- to 120-foot-diameter rotor. This modification would in turn require a redesigned fuselage and an extended tail rotor boom.

Some members of the helicopter design community have observed that the capabilities projected for the CH-53X+ represent a major challenge. The introduction of a new engine, a much larger rotor, higher disc loading, a new tail boom, and (probably) a new transmission amounts to a new aircraft, with many design unknowns. Further, a helicopter with a rotor diameter of 120 feet and takeoff weight of approximately 160,000 pounds may not be compatible with existing ships.

The anticipated requirement to carry more than 40,000 pounds to ranges of 250 to 300 miles is similar to the capabilities of the Russian Mi-26 HALO helicopter. The existence of the Mi-26 suggests that the technology for such an aircraft already lies beyond technology readiness level 6. However, it is not clear that the airframe of this

aircraft has the dimensions to allow internal carriage of ISO containers or Stryker vehicles.

A recent Office of the Secretary of Defense (OSD) study (see report of the Joint Vertical Aircraft Task Force dated September 24, 2004) has made an assessment that a more modern version of the CH-47 Tandem Rotor aircraft would be the best alternative for a new heavy-lift rotorcraft. This conclusion rests on the belief that the development of a double-rotor aircraft would entail less technical risk than would development of a single-rotor aircraft. If the DoD elects to retain the rotorcraft concept as the basis for future VTOL heavy lift, then this committee would concur with the judgment contained in that study.

The size of helicopters is constrained by possible rotor diameter and hover power. If one plots the maximum takeoff weights of existing helicopters against the factor {rotor diameter x hover power}$^{2/3}$, the result is a straight line, and one can expect that the size of future conventional heavy-lift helicopters will follow this "square cube" law. Thus, a notional helicopter designed to lift and transport a 20-ton payload would have a maximum takeoff weight of approximately 160,000 pounds and a value of {rotor diameter **x** hover power}$^{2/3}$ of about 20,000. Table 7 displays comparable figures for some existing and proposed helicopters.

Helicopter	*Max takeoff weight (lbs)*	*{Rotor dia x Hover Power}*^{23}
Notional 20 ton lifter	~160,000	~20,000
Mi-26 HALO	123,000	15,500
CH-53 X (proposed)	80,000	~10,250
CH-53 E	73,500	9,250
CH-47	54,000	7,000
CH-53 D	45,000	6,500

Table 7. Maximum takeoff weight of helicopters versus powering

Unless a technological breakthrough enables an escape from the tyranny of the square cube law, a helicopter that could transport a 25-

short-ton load would have to have a maximum takeoff weight of 200,000 pounds and an estimated {Rotor Diameter **x** Hover Power}$^{2/3}$ value of approximately 25,000. This implies that a helicopter with a 25-short-ton lift capability would have a rotor diameter–hover power product approximately 4.44 times that of e CH-53 E. If the engine power did not increase above that available in the CH-53E, the rotor diameter would have to increase to 353 feet. Similarly, if one held the rotor diameter constant, the horsepower of the engine would have to increase by a factor of 4.44. Unless the horsepower per pound of current engine designs and the weight of the transmission greatly improve, a design for a single-rotor heavy (50,000-pound) lift helicopter will be difficult to achieve. Some other approach must be used.

Although many ideas are under consideration, there is no clear winner (or even near winner) at present. Technological developments may improve engine performance and rotor diameter and produce a single-rotor design with the desired lift, range, and speed within the next 15 to 20 years. However, in the absence of some remarkable improvements in engine technology, the department must consider alternate concepts for achieving 25-short-ton vertical lift.

Findings and Recommendations

The task force recommends that the department undertake a vigorous program to develop VTOL or STOVL unrefueled ranges of 350 to 500 nautical miles and a 50,000-pound vertical lift. There is little likelihood that the commercial market will produce such a development. However, if the sea base becomes a central component of U.S. operations, it will require enhanced vertical-lift capabilities. The department needs to examine the options discussed in Appendix VI ("Technical Descriptions – VTOLs and STOVLs) and select the most promising. The department could have to make substantial investments to increase technological readiness levels before it can consider acquisition programs.

V. GROUND TRANSPORT AND AIRDROP TECHNOLOGIES: OVERLAND

Background

U.S. Army and Marine Corps ground equipment and supplies are designed to be ground transportable by one or more of a wide variety of modes, among them:

- Flatbed rail cars
- Trucks of various load capacities
- Fuel tankers
- Multiwheeled transporters for tanks and outsized construction equipment
- Semitrailers
- Wheeled caissons that are towed by trucks and HMMWV-class vehicles
- Half-track vehicles
- Specialized missile transporters and erectors, tank recovery vehicles, etc.

Almost all military ground transportation vehicles have to operate in off-road conditions. However, most of these vehicles are not all-terrain vehicles in the sense that swamp conditions, deep mud, sheer cliffs, large boulders, deep ravines, and wide rivers or streams devoid of bridges may limit their mobility. Fortunately, Marine and Army engineers have designed equipment and techniques to allow the rapid construction of serviceable "roads" through all but the most formidable terrain. The engineers usually avoid difficult terrain that is not amenable to the rapid construction of these "roads." Although adverse terrain may slow the speed of advance of Army and Marine ground forces, terrain conditions rarely act as a true limitation on mobility.

As fighting forces move long distances at high speeds, their logistics support tail stretches. If the terrain through which logistics support must move is not fully secure, the mobility of ground forces

becomes limited as enemy forces attack supply lines. The principal issue in ground mobility is not the adequacy or force level of the equipment. Rather it is the ability of ground forces to protect their logistics train and the ability of the logistics platforms to survive attack.

Unfortunately, Army and Marine "green trucks" are thin-skinned vehicles vulnerable to small-arms fire, rocket-propelled grenades, remotely detonated explosives, and car bomb attacks. Ground forces are employing, or might employ, a number of approaches to counter attacks on logistics vehicles. These include the following:

- Delivery of cargo by helicopters and airplanes
- Patrol and aircraft sweeps of intended routes
- Frequent change of routes (including the use of cross-country paths)
- Convoys accompanied by strong air and ground forces to offer protection and immediate (or even preemptive) reaction to any attack (or anticipated attack)
- Electronic countermeasures to jam commands of remotely actuated detonators
- Robotic devices to locate and deactivate mines, car bombs, and roadside bombs
- Armoring of vehicles for enhanced survivability
- Unmanned remotely controlled ground vehicles (not currently operational)
- Precision airdrop using GPS-guided parachutes and parafoils (experimental)

The first seven are operational approaches that U.S. forces have applied with varying degrees of success during current conflicts in Iraq and in Afghanistan. Although losses have occurred, logistic transport operations have been sufficiently successful that the sustainment of U.S. ground forces has not been at issue.

Vehicle Armoring

Armoring of transport and personnel vehicles has occurred extensively in Iraq. Steel-plate armor can protect against small-arms fire and, to some extent, mitigate the effect of rocket-propelled grenades. Unfortunately, steel-plate armor does not protect trucks against the effects of car bombs detonated close alongside them, or of large, buried roadside bombs.

Armor plate for the protection of logistics vehicles is heavy. The weight of a fully loaded truck equipped with protective armor plate is often significantly in excess of its design value. Operationally, this weight difference has resulted in frequent breakdowns—broken springs and shock absorbers, overheated engines, and transmission failures. Obviously, a reduction in the payloads of trucks to offset the weight of protective armor makes the problem less severe. But reductions in payload represent an inefficiency in transportation and thus often do not occur. Possible solutions may include the development and use of:

- Armor made from lightweight composite material
- Reactive armor (designed to activate an explosive charge on detection of a projectile)
- Trucks with shock absorbers, springs, wheels, engines, and transmissions designed to operate with current maximum loads in addition to the weight of a heavy suit of steel armor

All of these approaches will provide some degree of enhanced vehicle protection and survivability but will not eliminate the threats to logistic support vehicles in their entirety.

Unmanned remotely controlled ground vehicles

A more radical approach would be the use of unmanned logistics vehicles (ULV). Conceptually they might operate as armored off-road vehicles that advance over a broad front and thus avoid mines and ambushes at known choke points. ULVs could employ either

lightweight armor made of composite material or reactive armor. In effect they might be a variant of a Stryker vehicle designed to haul or tow cargo and for unmanned operation. Their trajectory might be preplanned or might be controlled from an overhead platform that would also have the capability of reacting immediately or preemptively to any attack on a ULV. Some of these vehicles could also serve as decoys to encourage hostile forces to use ammunition and reveal the location of planned ambushes.

There have been several DARPA programs aimed at the development of a family of robotic land vehicles designed to execute a variety of military tasks. None has met its objectives. While this lack of success testifies to the presence of tough problems, no fundamental principles appear at issue, and engineering work should continue. The use of robotic logistic vehicles would, of course, reduce personnel casualties, but if such a vehicle were hit, valuable military cargo would still be lost.

Precision Airdrops using GPS-guided Parachutes and Parafoils

Although the use of airdrop resupply in Iraq has been relatively modest, it has supported operations extensively in Afghanistan. The dispersion of cargo has been a traditional problem associated with airdrop, especially when cargo is delivered to isolated or surrounded units. One approach to reducing cargo dispersion is for delivering aircraft to operate at extremely low altitudes. The disadvantage is that heavy-lift aircraft operating at low altitudes are vulnerable to small-arms fire and shoulder-fired weapons.

Sports parachutists hold competitions to determine how closely to a designated spot they can land. Well-trained parachutists using parafoil canopies can land routinely within a 5-meter-diameter circle. They accomplish this precision by manipulating the guidelines of a parafoil to control direction and, to some extent, rate of descent.

Several vendors have developed GPS guidance systems to control the trajectory of cargo-carrying parafoils. These systems have demonstrated a militarily significant reduction in the dispersion of

cargo delivery. In principle, knowing the wind-shear profile above a drop point and understanding the response of a parafoil to changes in guy wire tensions would significantly improve the precision of airdrop delivery. Such a capability would allow C-17 and C-130 aircraft to operate at altitudes that provide a sanctuary from small-arms fire and shoulder-fired missiles.

All evidence to date indicates that newly developed technology will allow low-dispersion airdrops to occur safely. To date, one of the major drawbacks to the extensive use of GPS-guided parafoil cargo delivery has been the cost of what is basically an expendable system. Currently the cost of a prototype GPS-guided parafoil cargo delivery system is approximately $75,000. Even if economy of scale is achieved with possible future large acquisitions, or technology system cost reductions occur, costs are still likely to be appreciable.

Whatever the future costs of such a capability, they must be weighed against the cost of delivery by truck convoy. The cost of losing a single HMMWV and possibly two or three military personnel protecting a truck convoy will far exceed the cost of several GPS-guided parafoil cargo delivery systems. No complete economic trade-off study has been completed that examines the true cost of all alternative delivery concepts that might be used to provide logistic support to Army and Marine ground forces.

Findings and Recommendations

Army and Marine ground forces have used a variety of tactics, techniques, and procedures (TT&P) to ensure safe operation of ground logistic support operations in Iraq. These methods have been relatively — but not completely — successful. New techniques, training, and procedures are evolving, and the task force strongly recommends their continued development. In addition, the task force recommends that the department explore the following technologies and, where feasible and affordable, acquire the outputs and place them into service use:

- GPS-guided parachutes and parafoils to achieve a low-dispersion cargo airdrop capability from altitudes that

protect C-130 and C-17 aircraft from shoulder-fired missiles and small arms

- Light but effective armor systems for logistic vehicles to enhance their survivability
- Unmanned ground vehicles to minimize personnel loss, act as decoys, expose intended ambushes, and allow the simultaneous use of multiple paths to the intended delivery point

CHAPTER 3. DEPLOYMENT AND SUSTAINMENT OPERATIONS

I. INTRODUCTION

Trained people, adequate facilities (to include such factors as ramp and dock space, equipage, geographic dispersion, and accessibility) and an appropriately sized and modernized fleet of mobility assets are key requirements for the Defense Department's transportation system to operate efficiently and effectively. Figure 3 below depicts this complex, interdependent system.

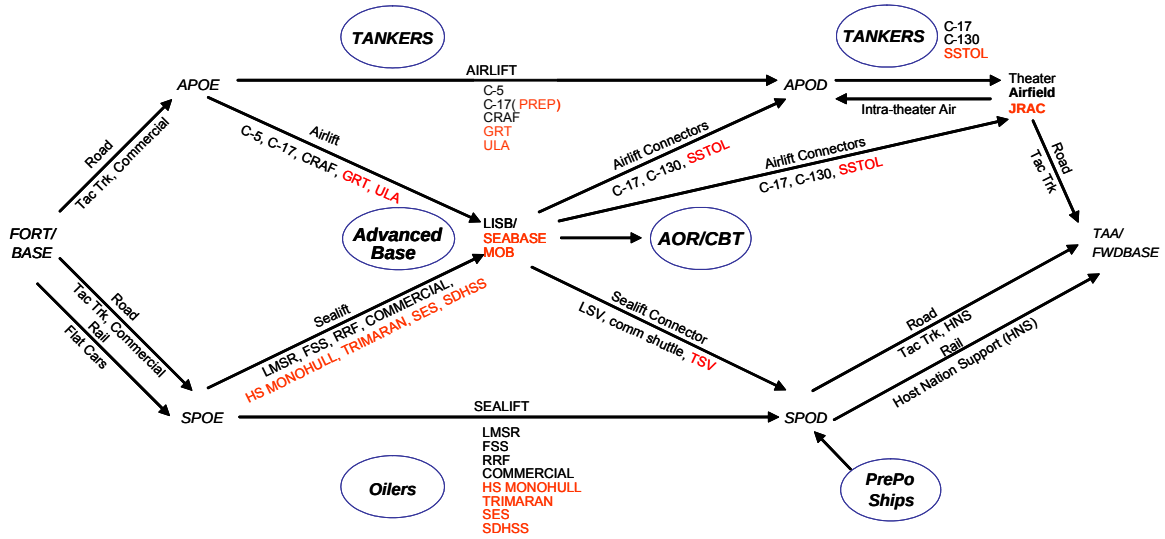

Figure 3. Mobility Force Design Strategy

The figure above also depicts many of the possible transportation strategies and highlights the mobility assets that are potentially available to meet various requirements. The assets shown in black are available in the inventory today. The task force considers those assets shown in red to be potential additions to current capabilities. This chapter will address the employment of these existing and future assets and supporting infrastructure deployment and sustainment operations.

Once a decision to deploy forces has been made, Joint Forces Command first selects the appropriate forces in coordination with the military services. These forces then start preparing for deployment. Simultaneously, TRANSCOM begins its preparation for the movement and sustainment of these forces through its deployment and distribution network. This one network, with its generally "fixed" capability and capacity, supports deployment, distribution, sustainment, and redeployment. It often functions "in competition" with commercial transportation needs. Thus, TRANSCOM's challenge is to optimize movement of deploying forces through the nodes of the system, given the assets available. Among a host of other decisions, TRANSCOM must decide what mode of strategic transportation is needed (air or sea) to move the force, whether movement from base or installation to the air- or seaport of embarkation should occur by rail or road, the advantages or disadvantages of the ports of embarkation, and the specific over-ocean airlift or sealift assets needed.

Many factors affect the choice of specific mobility assets. If movement is by air, just a few of the factors to be considered include specific overflight and/or destination restrictions likely to be encountered, the availability and capability of enroute staging and support bases, the need for air refueling and the availability of tanker aircraft, the capability of receiving airfields, the requirement for "recovery" bases, and the requirements for crew rest, stage crews, and staging bases. Similarly, if the movement is by sea, key considerations are the availability of Military Sealift Command (MSC)-owned or controlled ships, the readiness status of Ready Reserve Force (RRF) ships, the availability of mariners to man the ships to be activated, the availability of commercial vessels for charter for movement of equipment and sustainment materiel, the need for intermediate support and staging bases, draft restrictions at the port of discharge, the availability of marshalling or staging areas at the port of discharge (POD), and port clearance capability. Obviously, there are other considerations, but the above lists suggest the complexity of even the simplest movement operations and the trade-offs that must be made during the decision-making process.

These decisions then influence the assets selected for deployment. For example, if deployment occurs through an intermediate support base, equipment must be transshipped from strategic lift assets (LMSRs, FSSs, RRF, and commercial sealift or C-5s, C-17s, and CRAF) onto intratheater tactical assets (LSVs, TSVs, and commercial shuttle vessels or C-130s, C-17s and SSTOL). If the deployment is directly into an operational area, then strategic lift assets must move forces and equipment directly to the strategic air- or seaports in the operational area.

II. STRATEGIC INTERTHEATER MOVEMENTS

As in most military operations, maximum flexibility and adaptability in both forces and equipment are key to the success of mobility operations. The availability of a mix of assets with varying capabilities provides a commander with the widest range of deployment options and thus maximum flexibility of strategic inter-theater movement during an initial crisis response.

Strategic Air Deployment

Organic Airlift

As shown in Figure 3, the commander of TRANSCOM allocates a number of C-5 aircraft, C-17s, and the CRAF to meet requirements. The department should continue to explore options for follow-on long-range strategic airlift. Chapter 2 noted that the task force questions the viability of the Global Range Transporter (GRT) and is skeptical that the technology for an operationally useful ultra-large lift aircraft is feasible.

Also, as noted in chapter 2, although currently faced with significant reliability challenges, the Air Force plans to modernize and retain the C-5B in its fleet for 30 to 35 years. This aircraft is best suited and should continue to meet the need for moving oversized and outsized cargo. Some have suggested that the C-5A is a viable candidate for a life-extension program in the event that more organic outsized lift is needed.

Today, the United States' strategic-to-tactical hand-off point has moved from the major airports and airfields of Europe and the Pacific to forward aerial ports at the tactical level (Bagram, Balad, Mosul, Kirkuk, etc). The C-17's flexibility allows its use not only for strategic contingency missions, but also for sustainment, tactical support, and the timely operational relocation of forces. It has also provided the ability to move coalition partners into and out of theaters of operation. With the retirement of the C-141, the expansion of global mobility requirements, and the reduction in response timelines, the task force believes that the department must retain the option to increase the overall number of C-17s that the Air Force is procuring to provide for the responsiveness, flexibility, and capability required to meet the nation's increased global requirements.

The complexities of dealing with the global war on terrorism position airlift and tanker forces as major weapons systems, not simply transport means. Defense commitments and unpredictable future intervention needs push airlift and tankers into the role of "first responder." The organic strategic airlifter fleet allows DoD to respond to urgent events—to, for example, safeguard weapons of mass destruction. The fleet enables forcible entry of an airborne brigade, rapid reinforcement by medium (Stryker, Medium, Future Combat System) task forces—as occurred with the insertion of a Marine task force during Operation Enduring Freedom— and recovery from inadequate planning or shortfalls of equipment or troops in execution of ongoing operations.

Notionally, DoD needs to procure aircraft sufficient to meet the requirements in most scenarios for deploying and sustaining the air bridge and land-based tactical air as well as potential requirements for forcible entry and rapid (air-delivered) reinforcement, described above, which are likely to occur nearly simultaneously with other condition-setting tasks. The scenarios used for force sizing should include these possible events so that there is a clearer understanding of force level risks. They should not assume away the simultaneous events that drive higher the number of aircraft required to meet the many requirements.

The airdrop of a battalion task force in 2003 during Operation Iraqi Freedom highlights the possible need for additional C-17 aircraft, if the department is to have sufficient capability to support combat operations, while it embarks on other deployment and sustainment operations. This small airdrop operation required 32 aircraft (of approximately 80) for approximately 20 days, making them unavailable for other missions.

After the programmed fleet has reached its 180-aircraft size, an equivalent small airdrop operation would make 18 percent of the total fleet unavailable for other missions. Considering the national withhold that averages 10-15 percent of the fleet and those aircraft in maintenance, over 40 percent of the fleet would not be available for strategic missions during this time frame.

Extrapolating from this example, air-dropping a three-battalion brigade task force would require up to 96 aircraft for a five-day period. A need to deploy medium battalion task forces by air to reinforce other land forces would generate a similar, unforeseen requirement. The primary airlifter fleet must be able to support near-simultaneous airdrop and reinforcement operations, deployment, and sustainment in support of major combat and at the same time meet the demands of other potential contingencies. Thus the task force believes that the department must evaluate scenarios that require simultaneous operations.

Such scenarios clearly increase the requirement for C-17s above the current programmed buy. The task force believes that potential urgent, but unforeseeable, requirements argue for addition of an "insurance" increment to the C-17 procurement. They at least justify keeping the option open for continuing acquisition at a sustainable rate for several years beyond the scheduled end of production in 2008—at least until the department completes the evaluation of scenarios that require simultaneous operations.

The task force understands that the cost of each additional C-17 aircraft approximates $200 million—$2.4 billion for each year of production—with life cycle costs of the same amount. Other alternatives appear to be available to maintain the option for

additional aircraft. Early production aircraft could be turned in to the manufacturer for resale to commercial air freight operators; production of the current model would replace them to maintain the fleet size of 180. Also, if other alternatives are not available, the production line could be preserved and laid away in the same manner as was the C-5 line, so that production could restarted at some time in the future.

Tanker Recapitalization

Key to global responsiveness and reach are the air refueling capabilities of the United States Air Force. Today, as it has every day since 9-11, a significant portion of the Air Force's tanker fleet has been on duty around the world supporting U.S. air forces (Army, Navy, Marine and USAF) in delivering combat capability and sustainment. On any given day, Air Force tankers deliver an amount of fuel over the U.S. Central Command (CENTCOM) area of operation equivalent to the requirement for a heavy Army division. This critical capability goes largely unnoticed.

In addition, tankers provide support every day for the air defense combat air patrol (CAP) missions that fighters execute across the nation to protect cities and provide homeland security. Unfortunately, the largest portion of the tanker force, the USAF KC-135 fleet, is more than 45 years old. At the same time, the newer portion of the USAF tanker force, the KC-10 fleet (including fewer than 60 aircraft), may soon experience lower readiness rates due to reduced levels of spares parts, because commercial airlines have largely retired the DC-10 commercial variants of the aircraft. However, the continued presence of converted DC-10s in the package carrier fleet suggests that a continuing spare parts production base could be viable given appropriate active involvement by the Air Force.

Even if the department began replacing the KC-135 fleet today, the aircraft would likely be nearly one hundred years old by the time the last KC-135 was replaced. The task force agrees with the conclusions of the February 2004 DSB Task Force on Aerial Refueling

that dealt with the KC-135[14], but emphasizes that the need to begin recapitalizing the tanker fleet, especially the KC-135 fleet, is paramount and should begin by 2007, if the fleet is to continue to meet global and combat requirements.

Civil Reserve Air fleet (CRAF)

The Civil Reserve Air Fleet (CRAF) program is a cost-effective addition to the organic airlift fleet and must be retained. Recent upheaval in the U.S. airline industry suggests that the department must monitor this program closely. It must consider changes (and reinforcement) as appropriate to keep the CRAF as healthy as possible.

The dangers are clear. At present, three U.S. passenger carriers are in bankruptcy. To reduce costs, they are entering into code share agreements with foreign airlines, changing their route structures to reduce the number of long-range passenger aircraft in their inventories, and purchasing more regional jets. At the same time, given the uncertainty in the military cargo market, the cargo airlines size their fleets to meet commercial requirements. This sizing results in minimum excess, or surge, capacity to meet military requirements. These and other actions may well reduce the number of aircraft available to the department during contingency operations.

In response, DoD should consider two actions to ensure the viability of the CRAF program: First, it should work with the General Services Administration (GSA) to revise the city-pairs contract with passenger airlines and eliminate the provision that allows any government agency to purchase the "last seat available at a guaranteed price." Such action could still provide the department with the opportunity to acquire the last available seat at the commercial price, while helping the airlines improve overall management of their seats. (This may seem like a small issue within government, but it is a significant management issue for the CRAF carriers.)

14. Report of the Defense Science Board Task Force on Aerial Refueling (February 2004).

In addition, the department should consider providing for an annual "assured business" line in the budget of passenger and cargo airlines through Congressional authorization and appropriations to ensure the CRAF capability remains available from the airlines. (To ensure it is visible and protected, the department should identify the value as a separate line item in the Air Force Budget.) This action would provide some stability for the DoD market and enable cargo carriers to better size their fleets. It would ensure availability at the onset of a crisis.

Strategic Sea Deployment

Movement from Home Station to Port of Embarkation

The movement of forces from "home station" (a base, fort, or installation) through the seaport of embarkation (SPOE) onto vessels should occur as one continuous operation in order to meet deployment schedules. The transformation, in recent years, to modular units, along with enhanced materiel readiness, has improved the smooth flow from the home station to the port. This part of the process begins with a robust command–and-control (C2) structure to ensure efficient movement from the fort or base. This efficiency is critical for sealift. Ship-loading occurs in a time-constrained environment. Whether ships are stowed according to task force organization or administratively loaded for efficiency, load plans attempt to maximize available space. Those in charge of the loading take care to ensure that dead space does not result from rapid loading and that access to available space is not unnecessarily blocked. Equipment must arrive at the port in the order specified by the load plan to ensure the loading of equipment in proper sequence. A strong C2 structure between the fort or base and the port enables terminal operators to load and stow equipment in the proper order. In addition, a strong C2 structure may allow more time to make adjustments in response to changes in the force flow or to move lower-priority cargo or sustainment supplies by utilizing space not suitable for unit equipment.

Preparation for movement also requires quality staging areas at the home station, with a number of capabilities: hardstands to

marshal deploying units, sufficient materiel-handling equipment and container-handling equipment (MHE and CHE), efficient sidings and loading platforms for rail movement, and easy access to the local interstate highway system (connectors from the base or installation) for vehicles moving to air- and seaports by road. Availability of adequate warehouse space and prepared packaging materials, along with the use of prepackaged supplies, facilitate the rapid assembly and movement of "accompanying supplies."

A strong relationship with the senior managers at the SPOE, combined with realistic training, helps ensure an efficient embarkation process. Adequate, available infrastructure at the SPOE is essential. Prenegotiated agreements for access to marshalling areas, warehouse space, materiel-handling equipment, and quay space or berths are a basic requirement for efficient processes. As at home station, the condition and length of the highway connectors, gate access, road and rail traffic patterns, and the availability of rail flatcars with tie-downs, switch engines, and rail spurs all affect the speed and efficiency of out-load operations. The chain-tie-down flatcars used for moving tanks and other heavy equipment must be closely managed so they can be repositioned for follow-on units.

The Logistics Management Institute recently completed a report entitled "Army Railcar Acquisition Study," which concluded that future Army force sizing, station locations, and force-mix decisions might significantly change projected flatcar requirements. Therefore, there is time to wait for these issues to come into sharper focus before beginning new railcar acquisition programs. This conclusion rests on an agreement with the rail industry that it will perform the necessary inspections and maintenance to extend the service life of the existing railcar fleet from 40 to 50 years and to push the first retirements to 2014. The department should review the status of this service-life-extension program biannually to ensure that adequate railcars are available to meet the requirements of DoD's forthcoming Mobility Capability Study (MCS). It should start the planning required for replacement of these cars at the beginning of the long-range planning cycle over the period from 2014 to 2025.

Strategic Ports

DoD must have guaranteed access to domestic strategic port facilities and services .[15] The strategic ports must have the incentive(s) to execute the infrastructure (rail and staging-area) enhancements necessary to support military deployments. The use of Congressionally authorized mobility enhancement funds (MEF) has helped TRANSCOM provide limited assistance in this area in the past, but the availability of such MEF funds has been inconsistent. The task force recommends that the department formalize the creation of a level-of-effort MEF funding line in the DoD budget so that TRANSCOM can fund these much-needed, but relatively low-priority, enhancements.

In the past, major military deployments have been infrequent but lengthy. The Afghanistan and Iraqi operations suggest that the United Sates is experiencing a sea change in the nature of future deployment requirements. More frequent but shorter deployments place much greater stress on the strategic ports. They must accommodate larger DoD requirements in compressed time frames while they simultaneously meet continuing and increasing commercial demands.

At present, in preparation for major deployments, the Maritime Administration (MARAD) issues port planning orders (PPOs) to strategic ports, identifying facilities and services DoD may need during deployment. PPOs are not contractual arrangements and do not guarantee DoD access to identified facilities or services. Under the Defense Production Act of 1950, MARAD can obtain mandated priority use of facilities and services for the department. The department compensates the ports only when military cargo moves through them and not for peacetime preparations to support future military operations.

15. The 15 U.S. commercial strategic ports subject to MARAD Port Planning Orders are Jacksonville FL, Beaumont TX, Corpus Christi TX, Charleston SC, San Diego CA, Wilmington NC, Savannah GA, Tacoma WA, Norfolk/Newport News VA, New York/New Jersey, Philadelphia PA, Morehead City NC, Long Beach CA, Oakland CA and Anchorage AK.

Military deployment operations differ considerably from routine commercial container operations. They require special services on short notice, including large segregated staging areas, large labor forces, different labor skills, increased security, and priority service. Military operations can disrupt commercial operations in both the short and the long term and can result in the possible loss of commercial customers.

Prior to Operation Iraqi Freedom 1 (OIF1), a number of major Amy installations enhanced their rail infrastructure through the Army Strategic Mobility Program (ASMP). The acquisition of the large, medium-speed roll-on roll-off (RO/RO) ships (LMSRs), as well as a number of significant improvements made to the readiness posture of Ready Reserve Force (RRF) vessels, also greatly increased and improved sealift capacity. As a result, during OIF1, installation out-load capability actually increased. However, a number of factors constrained throughput at the strategic ports—principally, inadequate rail infrastructure and staging areas within ports. The department must address these shortfalls to take full advantage of the enhancements it has developed over the past 10 years and to meet its demanding deployment scenarios. An increasingly congested commercial transportation system will make such improvements difficult.

Moreover, projected global trade growth will increase the demand for port services. Ports must expand to meet such future demand. Competition for waterfront and adjacent land is already intense. At present, it is difficult and expensive for ports to acquire land for expansion. Increasing throughput with infrastructure enhancements can provide additional capacity without the need to acquire land. Commercial ports build and maintain infrastructure primarily to meet commercial requirements, not those of the Department of Defense. After meeting commercial requirements, the ports can utilize existing excess capacity to help meet deployment requirements. Nevertheless, problems arise when military requirements are greater than the excess commercial capacity available. This was the case initially in OIF1 at the ports of Beaumont, San Diego, Corpus Christi, and Jacksonville.

The department should develop a program that funds domestic strategic port infrastructure projects in return for assured access to these facilities and services when needed. An Army Power Projection Program (AP3)–type arrangement or modification of the AP3 to include commercial port enhancements could provide the necessary funding. The program should be a public-private partnership with matching funds from the ports. Funding should (1) acquire land needed for expansion of port rail and staging areas and (2) make improvements on port property for expansion and upgrade of port rail and staging area infrastructure. Strategic ports that obtain funding should enter into contracts with DoD to guarantee access within 48 hours for the negotiated port facilities and services. DoD-funded enhancements would be available to support commercial operations when the department does not require the improved areas.

Port Operations

After a long period of neglect, recent improvements to global en route infrastructure have significantly enhanced the ability of the United States to respond to contingencies. The department must sustain that effort. Today, TRANSCOM maintains a network of port and hub operations around the globe. These ports, both aerial and surface, are critical to supporting troops deployed (and deploying) to various contingencies. As a threat evolves, the department must pay attention to the proper alignment of its base infrastructure to ensure maximum responsiveness. Fixed basing, forward operating sites, and access agreements, together with an expeditionary capability to rapidly open, transition, change, and close support operations, are essential to maintaining military responsiveness. This expeditionary capability must reside in both the air and the surface components of TRANSCOM.

Organic Sealift

The ability to deploy medium to heavy forces from the United States and project follow-on forces requires significant sealift capability. Figure 3 shows the sealift assets currently available—LMSRs, FSSs, MARAD RRF, and commercial vessels.

Today and in recent years TRANSCOM has, through its naval component, MSC, provided an unparalleled level of support to the war-fighting effort. The introduction of the LMSR into the MSC fleet in the 1990s, along with introduction and expansion of pre-positioned materiel fleets for the services, has considerably increased the nation's ability to respond quickly to contingencies. The investments made in the LMSR program following Operations Desert Shield and Desert Storm provided the capability to more rapidly move forces from the United States to the area of operation in support of OIF. These vessels will provide the core sealift capability for moving heavy forces for the next 20 to 30 years. Moreover, commercial industry partners complement the number of LMSRs available. During OIF, MARAD successfully supported the largest rotation of forces since World War II.

The country's fleet of eight fast sealift ships (FSSs) provides the ability to move critical heavy combat capability quickly to support combatant commander (COCOM) operations. These 1970s-vintage ships' useful service life will end in approximately 2020. Recapitalization of this fleet is necessary to provide a full range of options to combatant commanders. This fast sealift capability also satisfies a basic requirement to move low-density, high-acquisition-cost items that may not be pre-positioned. An FSS was able to quickly deploy armor capability to Somalia in 1994 in response to the failed special forces operation in Mogadishu. To preclude a gap opening in the nation's capability portfolio, it is time to begin evaluating options to replace these vessels.

Ready Reserve Force

For the load-out of equipment moving by sea, the possession of a mix of assets with varying capabilities provides the combatant commander with the flexibility required to meet a range of needs. Significant progress has occurred since Desert Shield and Desert Storm in increasing both the types and numbers of ships available, as well as the readiness status of the Ready Reserve Force (RRF) vessels. The task force believes one additional change is needed to adapt the RRF to post-2001 strategic needs: repositioning some of the fleet to locations close to forward-stationed forces' home bases (for example,

in Hawaii) to shorten deployment time to U.S. Pacific Command (PACOM) and CENTCOM areas.

The RRF ships generally exceed the normal upper age limit for ships in commercial trade (15–20 years). Some background information:

- RRF managers have stated that in most cases, they can maintain RRF ships through the 10th American Bureau of Shipping (ABS) special survey (the ships' 50th year). Maintaining ships beyond 50 years raises potential obsolescence issues and increases the risk of hull, main propulsion, and auxiliary system failure.
- The Navy has based its maintenance and reliability projections on relatively inactive periods. However, in fiscal year (FY) 2003 and 2004 the number of full operating status days for the top tier (about 20 of 36) RO/ROs in the RFF has increased over tenfold to 8,500. This increased tempo of operation may enable MARAD to identify and repair or replace any defective equipment. Nevertheless, it could also have an overall negative impact on ship service life and must be factored into RRF recapitalization plans.
- In FY 2005, the average age of the 59 RRF ships is over 34 years. By the end of the current 2006 Program Objectives Memorandum (POM) cycle in 2011, nine RRF ships will be in their final ABS survey cycle, and six ships will be beyond the age of 50.
- Most of the current RO/RO vessels (22 of 31) in the RRF are foreign-built ships purchased on the world market (during the early 1990s) at considerably less cost than is required to build new ships.
- TRANSCOM has requested that the RRF program manager conduct ship condition surveys to assess material condition and identify possible unsupportable machinery, equipment, and auxiliary systems over the next decade. The initial assessments were due for completion by the end of December 2004.

- The National Defense Sealift Fund (NDSF), a Navy appropriation, has funded the RRF program since 1996. The NDSF legislation has specific language that precludes funding for the purchase of foreign-built ships. (This prohibition also pertains to ships funded through the Ship Building and Conversion, Navy (SCN) appropriation.)

Given the age of the RRF, the MARAD has raised the question of recapitalization. While the long-term need for RRF capabilities will not be clear until completion of the Mobility Capabilities Study (MCS), there are some assumptions that one can safely make:

- RRF RO/ROs will remain the most useful component of the common-user fleet[16] and in general are the most modern ships in the fleet.
- The non-RO/RO ships either provide specialized service-unique capabilities (e.g., modular cargo delivery systems and intermediate aviation maintenance) or other capabilities not normally found in the active merchant marine (e.g., crane ships and offshore petroleum distribution systems).
- By current law, only U.S.-built ships can recapitalize the RRF, but few existing U.S.-built RO/ROs exist for purchase.
- Newly constructed RO/ROs funded via the NDSF will go directly to the MSC, not the MARAD, for operation, as is the case with the LMSR class.
- RRF RO/ROs will likely load after the faster MSC surge sealift ships (FSSs and LMSRs). However, they can support delivery of reinforcing forces and sustainment.

If the department requires the existing or an increased level of RO/RO surge sealift capacity, then, based on the above assumptions, there are several options available to mitigate the effects of the aging RRF fleet. They include the following:

16. Vessels in the RFF that do not provide specialized capabilities

- Extend and enhance the existing fleet: Continue the ongoing RRF RO/RO capacity expansion (e.g., addition of spar decks) and fund a ship-life-extension program (SLEP) for priority RRF ships. This is an inexpensive means of retaining and expanding the existing fleet until the end of its expected service life.
- Expand the Maritime Security Program (MSP) fleet: The MSP provides a government-funded payment to a ship operator as compensation for the extra cost of U.S. flag operation. In exchange, the U.S. government gains access to the ship when needed during contingencies. The most recent solicitation for MSP expansion indicates that there are many RO/RO-type ship owners willing to reflag their ships if provided an MSP payment. Such ships may be a relatively inexpensive ($2.6-3.1 million per ship per year) means of replacing RRF RO/RO capacity. The key question is how quickly these vessels would be available and on-berth for loading. Many of them could potentially be on-berth more quickly than RRF ships maintained in 5- or 10-days readiness status. However, the MSP vessels are commercial vessels that must be "pulled" from their established trade lanes, repositioned, and made available for the department voluntarily or, if not, activated through the Voluntary Intermodal Sealift Agreement (VISA) program. Currently DoD does not gain access to these vessels until stage III of VISA. The task force views the MSP vessels as a way to "replace" those RRF vessels that reach the end of their "design life" and augment the RRF, but not as an eventual replacement for the entire RRF.
- Transfer Maritime Prepositioning Ships (MPS) to the RRF: The MPS are relatively new container and RO/RO ships. The oldest are younger than all but four of the current RRF RO/ROs. The MPS will be eligible for transfer into the RRF when replaced by the MPF (F), beginning approximately in 2013. Assuming a 45–50-year life, these ships will extend RRF viability to nearly 2030.

- Acquire new construction RO/ROs: It is likely that any new RO/RO ships built for surge sealift will possess at least LMSR speed and flexibility. Probably, they would also possess design features to replace the FSS built in the early 1970s.
- Request relief from the current legislative prohibition against purchase of foreign-built ships for the RRF.

Of the above RRF recapitalization options, beyond enhancing the existing fleet, the MSP alternative appears to the most attractive near-term option for augmenting the existing RRF. This assumes that such ships can meet time and capacity requirements determined by the MCS. The cost of an MSP ship is less than maintaining an RRF ship in reduced operating status (ROS) 4/5, and there is no capital cost associated with MSP vessels. Moreover, each MSP ship has a much larger crew than do those in the ROS fleet. Nevertheless, the department must exercise great care in order to ensure that it retains "fixed" capability in the RRF to provide immediate access to vessels required for a national crisis. The MPS transfer option is viable for the mid-term, when the MPF (F) comes onboard approximately 10 years from now. However, it is probable that cuts or reductions in the current program may stretch this time frame.

If these options are inadequate, then new construction of RO/ROs is the only legal alternative. However, due to the high costs of ship construction in the United States, the task force envisions using this option only for higher-speed sealift needs. If there is a need for additional conventional, slower-speed RO/RO ships, then the administration could request relief from legislative prohibitions against purchase of foreign-built ships. The department could acquire and reflag such ships from the international market for less than 30 percent of the cost of building such ships domestically.

The above analyses of the state of the FSS and RRF fleets suggest the need for TRANSCOM and the Navy to conduct an analysis of alternatives that can produce a strategy for sizing these parts of the sealift force and replacing the aging vessels.

Afloat Pre-positioning

One of the most flexible assets available to the National Command Authority during the initial stages of a crisis is the afloat pre-positioned materiel. In the task force's view, effective management of the afloat pre-positioning program is one of the most effective ways to achieve the department's desired initial timelines in the 10-30-30 joint swiftness goals with heavy/medium forces. Land-based pre-positioned brigade combat team (BCT) sets may be a less expensive option than sea-based sets and are certainly more quickly employable if the area of operations is contiguous. Even in other scenarios, the Army's three planned land-based sets could be available for employment much more rapidly than CONUS-based equipment. However, the task force believes that afloat pre-positioning offers the department far more strategic agility, enabling the department to reposition all the sets *between regions* as the situation requires. There would be no potential international political barriers to deploying the afloat sets, as might exist with the land-based option.

The task force recommends that DoD approve the six equipment sets (three Marine MEBs and three Army BCTs) that are programmed or planned to be pre-positioned afloat. These pre-positioned sets should include the most modern pieces of equipment and the appropriate number of attack, assault, and cargo helicopters.[17]

High-speed Transoceanic Sealift

DoD should continue to explore options for new strategic sealift programs. There is a clear need for DoD to have the capability to rapidly deploy heavy/medium brigade combat teams to reinforce forward-deployed U.S and/or allied forces or forcible-entry land forces. The pre-positioning strategy gives the joint force commander the ability to deploy the three MEBs and the three afloat Army BCTs rapidly to an area of operations and follow with the two land-based

17.In the mid 1980's a test was conducted in Europe to evaluate the "storage" of helicopters in POMCUS (Pre-positioned Materiel Configured to Unit Sets.) The results demonstrated the technical feasibility of pre-positioning helicopters in a humidity-controlled warehouse.

pre-positioned BCTs, if port and airfield access is available. If more BCTs are required, the commander must turn to the Marine and/or Army BCT/RCTs based in CONUS and Hawaii. Rapidly deploying them for reinforcement will require high-speed (40-knots) vessels, if they are to contribute to rapid decisive operations.

Within five or six years the Army will have 23 active duty, CONUS-based heavy and medium brigade combat teams (with three others forward stationed). Five of the heavy BCTs could marry up with pre-positioned equipment. The task force could not see how in the next 10–15 years any of the remaining CONUS-based brigade combat teams could be employed to contribute to meeting the "10-30-30" stretch goals -- without deploying them, as in Operation Iraqi Freedom, well before the initiation of combat operations.

The task force considered the practical challenges of the "10-30-30"stretch goals, but concluded that the strategic situation may demand such goals. Now the task is to make the combat power represented by these brigade combat teams employable in all phases of the fight. The long-term solution may be a combination of the pre-positioned BCTs plus a fleet of austere (port)-access high-speed ships (AAHSSs), discussed in chapter 2, for which the task force recommends initiation of an R&D program. The AAHSS could enter service at the time the Army fields the 15 Future Combat System (FCS) brigades, around 2025. If accompanied by measures to compress embarkation time and reception, staging, onward movement and integration (RSOI) and by processes that take advantage of strategic warning, these vessels would enable rapid deployment of additional BCTs in time to engage in the earliest part of the operation, whether or not pre-positioned BCTs are employed.

Deploying brigade combat teams from CONUS would take approximately 30–45 days with current and programmed sealift–adequate for later reinforcing forces, but with the risk of losing operational momentum gained by the joint force during initial operations. The difference in deployment times lies in the CONUS preparation time – the assembling of vessels from reduced operational status and the movement of units to the sea ports of embarkation (4–5 days), loading (2–4 days), transit to the region (16–

17 days)[18], debarkation (2–4 days), and joining troops with equipment and preparing for employment (4–5 days), or a total of 28–35 days. Furthermore, because CONUS deployment is so much more complex than deployment of pre-positioned equipment sets, there are more opportunities for delays.

In addition, access to the deep-draft ports required by current sealift is by no means assured for either CONUS-deploying forces or pre-positioned forces.

There are major advantages of a capability for rapidly deploying BCTs directly from the United States on vessels that could enter austere ports. Intermediate staging bases for transferring pre-positioned equipment sets may not be available, or the region of intervention may be far from the location of pre-positioning vessels. The AAHSS vessels could transit to most potential operational areas in 8–9 days if they could achieve the 40-or-more-knots sustained speed. They would link up with air-transported troops at a friendly port and then transport the troops to the operational area for rapid discharge in an essentially employable condition. The vessels could deploy forces directly to the operational area and cycle to ISBs to transport pre-positioned units. The positioning of the vessels close to the units in CONUS, as with the present FSS fleet, would reduce reaction times for preparation and loading through opportunities for frequent exercises. As chapter two points out, the 25-year time horizon provides the department with the opportunity to make advances in the engineering problems surrounding high-speed sealift.

The current investment in R&D is essential so that the department can understand and resolve the technical barriers to high-speed strategic sealift and assess its potential longer-term value. As chapter 2 indicates, the Army, Marine Corps, and TRANSCOM must work closely with the Navy and naval architects to understand the port conditions that such vessels are likely to confront and the operational concepts for employment.

18. Less about 4 days for Hawaii based BCT/RCTs.

Once technical issues and likely costs are better understood, the department should undertake an analysis of alternatives to the AAHSS program. A logical alternative is additional afloat pre-positioning. The research, development, test, and evaluation effort for the AAHSS program is likely to cost in the neighborhood of $5–10 billion assuming the need to build and evaluate an initial vessel. Based on Navy estimates for vessels of similar size, the initial vessel could cost $1.2–1.5 billion and follow-on vessels on the order of $1.0–1.2 billion.[19]

Using the estimated payload size of the vessel noted in chapter two of 4000 tons – a little more than the objective future combat system (FCS) battalion task force weight— approximately three would be required to lift an FCS brigade combat team (estimated at 10,000 tons and 140,000 square feet) with initial sustainment. Thus, a four-BCT capability (possibly twelve vessels) would cost roughly $12.2–14.7 billion plus $2.4 billion for 20-year life cycle sustainment (the ROS rate of $10 million per year per vessel) and the $5–10 billion in R&D, or $19.6–27.1 billion in total.

In the afloat pre-positioning alternative, the four-BCT capability would require only four LMSRs of the 11 that are currently earmarked as surge vessels. This would have no real impact on surge capability, since the four LMSRs would otherwise ostensibly lift the same equipment sets from CONUS. There would be additional crew and berthing costs of approximately $40 million a year for operating the four vessels, additional costs for pre-positioned equipment maintenance, and, perhaps, additional equipment added to the pre-positioned items.

A large cost element would be for four FCS training sets, since the organizational sets would be pre-positioned. Cost is indeterminable at this time but could be minimized by equipment sharing between the proposed 15 FCS brigades and factoring in their rotations to overseas operational or training sites. This reasoning assumes the

19 Rough cost estimates extrapolated from Navy designs for an intratheater high speed vessel and the larger RSLS. Such a vessel has never been designed but those familiar with the effort believe the high technology component in this first of a kind vessel will drive the costs.

Army adopts the Marines' philosophy of retaining only sufficient equipment to provide necessary training.

The largest cost element would be for sufficient joint high speed vessels (JHSVs) to provide the capability for austere port access. Approximately 12 JHSVs could lift a single FCS brigade at a cost of $2.4 billion at $200 million per vessel, with life cycle costs estimated at $10 million per year for a 20-year life, a commitment of approximately $4.8 billion. Two sets of JHSVs—costing $9.6 billion—could give a faster closing capability if the austere ports and infrastructure could accommodate them, requiring just two lifts to land the four FCS BCTs. Even if the four training sets of FCS cost $1 billion apiece, the estimated costs of the afloat pre-positioning alternative (JHSV— $9.6 billion, FCS training sets— $4 billion, and LMSR operation—$ 0.5 billion) appear to be well under the AAHSS costs.

These estimates are very rough order–of-magnitude data, but they indicate the need to initiate the AAHSS R&D program to better understand the technical barriers, costs, and benefits.

Strategic lift for Sustainment Operations

Sustainment operations begin almost simultaneously with the deployment of forces. These forces generally require early apportionment between deployment and sustainment requirements. As soon as the situation permits, CRAF cargo aircraft usually become available through either the volunteer program or through some level of activation. Likewise, the department typically charters commercial vessels by enlisting a few commercial volunteers or through the VISA program. Sustainment materiel may flow through an intermediate staging base or directly into theater ports of debarkation. It will move through the same defense transportation system depicted in figure 3 and be transported using some portion of the assets shown.

In addition to sizing the FSS and RRF fleets, the department faces yet another issue that affects the utility of the entire sealift fleet—LMSRs, FSSs, RRF, and MARAD-sponsored commercial vessels for sustainment operations. Because of the ships' size, port access may

not be feasible in less-developed parts of the world. The few major ports are likely targets for access-denial measures. Therefore DoD must consider sealift delivery alternatives, such as the use of ISBs with intratheater vessels as well as rapidly employable countermeasures.

III. INTRATHEATER OPERATIONAL MOVEMENTS

Tactical Airlift

Through the mid-range time period indicated, forces and materiel will be distributed within the theater of operations by land and sea platforms and by air using C-130 and C-17 aircraft. C-130 aircraft may use theater airfields, either to move forces, supplies, and personnel, or in direct support of forces engaged in combat. To fix one unnecessary and annoying gap in joint theater airlift operations, the standards and criteria used by the Air Force in determining the mission risk and the appropriateness of combat landing strips should be harmonized with those of the Marine Corps. Also, the Air Force should equip adequate numbers of these aircraft with the defensive systems necessary for assault support missions.

In order to meet the tactical requirements of tomorrow's force, work should continue on the development of a short-take-off-and landing (STOL)/SSTOL aircraft as a replacement for the C-130. Such an aircraft is required in the long term both to replace the C-130 in its current role and mission and to support operations from a sea base. The Air Force has initiated the AMC-X program, leading to the development of the joint operational concept and requirement for future tactical airlift capabilities to support joint land force, maritime, and air operations as well as other theater airlift needs. The needs identified by the Army present a formidable technical challenge: a craft with an 80,000-pound payload, to accommodate two Stryker or Future Combat System vehicles, and a SSTOL landing profile. Yet achieving that capability would also go far toward meeting a high-capacity seabasing connector requirement. The dimensions of the technical challenge argue for a robust R&D program and joint

management to continuously reconcile capability objectives with technical feasibility.

Tactical Sealift / Intratheater sealift

Current sealift connectors from an intermediate support base or sea base include landing craft, utility (LCU) vessels and logistic support vessels (LSVs). The LCUs and LSVs are of limited utility due to their slow speeds and minimum cargo capacity. The task force believes that there is an immediate need for a high-speed intratheater vessel to address this requirement as well as enable deployment of forces and sustainment into austere ports. Both the Army and Marine Corps have articulated requirements for this type of vessel to support operational maneuver and sustainment. For example, the ability to deliver combat-configured, immediately employable, mounted forces at many points along a littoral in an unpredictable fashion is valuable to the land forces commander. The proposed Joint High-Speed Vessel's (JHSV's) projected speed and its ability to access austere ports would enable the land forces commander to exploit additional lines of operation. Its projected unrefueled range is 1,000–1,500 nautical miles, and its payload capability is 750–1250 tons, which at the upper end of the range would handle a line company of a heavy brigade's maneuver battalion. This operational maneuver capability would fill a current void in the mobility system of systems

Like other theater maritime forces, the JHSV organizations would be allocated to the COCOM and likely controlled by the joint force maritime component commander. That commander could integrate JHSV operations with other maritime operations to assure force protection and effective support of the other component commands. There is potential synergy between the JHSV and the Littoral Combat Ship (LCS) programs in that both would be high-speed littoral assets. The LCS could provide escort protection to JHSV missions.

Three commercially designed, military-crewed, modified experimental vessels with capabilities similar to documented JHSV requirements have been used to provide sustainment to forces operating in the area around the Horn of Africa, as well as to conduct special movements in the CENTCOM AOR. The Navy Special

Operations Command is evaluating one of these vessels in the PACOM area. An additional leased vessel transports Marine units to training sites outside Okinawa and has recently supported tsunami relief operations.

CENTCOM has used this capability to move unit equipment, SOF forces, and sustainment supplies within its theater. The vessels have demonstrated significant advantages when employed during training exercises and simulated contingencies in the PACOM AOR. The task force sees a need for such high-speed vessels to meet operational requirements for intratheater movements of forces and materiel over distances ranging up to 1500 nautical miles. The products of the JHSV program have the potential to be important "connectors" in the seabasing concept and to shorten reception, staging, onward movement, and integration (RSOI) times in the theater.

Other requirements are being added as experience is gained with the leased experimental vessels. The task force supports the JHSV program, for which the Navy (PEO Ships) has accepted acquisition responsibility. Yet several technical challenges must be overcome. As noted in chapter 2, engineering work is needed to develop the interfaces with the “connectors” at the ISB or Sea base and at the beach, pier, or RO/RO ramps. Furthermore, the modified commercial design vessels now in experimental use are thin-skinned and constructed of aluminum. They cannot operate in heavy weather and high sea states and are not capable of transferring cargo and personnel at sea in an increased sea state. These current limitations should be considered in selecting the eventual design and builder. When complete, the analysis of alternatives should clarify the JHSV performance requirements to mitigate the limitations.

At the same time, private entrepreneurs are designing and planning high-speed vessels to operate commercially along the East Coast of the United States by approximately 2008. The department should explore a public-private partnership arrangement with these entrepreneurs to support a short sea-shipping service along the East Coast in return for access to these vessels during a military contingency.

Arrival Air- and Seaports of Debarkation

The USAF Air Mobility Command (AMC) has demonstrated some considerable success in organizing and equipping expeditionary forces capable of quickly opening, strengthening, transitioning, and closing or relocating aerial ports in contingency areas. AMC's central management and command and control of organizations such as, but not limited to, theater airlift control elements (TALCEs) and its establishment of expeditionary mobility task forces (EMTFs) on each CONUS coast, has greatly enhanced the command's ability to respond. New and improved materiel solutions for supporting ports have been significant and must continue. Materiel-handling equipment (MHE) such as the Tunner and Halvorsen K-loaders has proven invaluable in accelerating the flow of materiel to and through en route destinations.

TRANSCOM's Army component, Surface Deployment Distribution Command SDDC, must develop and procure this same capability to open seaports quickly in contingency areas and to manage throughput of sustainment materiel (containers) into inland hubs. Current and historic doctrine requiring TRANSCOM to request forces from the U.S. Army to execute this mission is no longer consistent with recent Secretary of Defense decisions regarding global force management. The commander of TRANSCOM should have the ability to quickly deploy, through SDDC, the ability to establish seaports and inland theater-level hubs to provide 100 percent visibility of sustainment and contingency cargo and equipment. Therefore, the commander should receive more ready access to the required forces.

At the same time, the department, TRANSCOM, and its component commands must continue to pursue the capability of "total asset visibility" in tracking and controlling containers, pallets, and equipment moving from "home station" to final delivery points in the theater of operations. At the theater level, the formation of a flexible and responsive network, synchronized by the Theater Deployment and Distribution Operations Center—a new, maturing, and "breakthrough" command-and-control concept, discussed in chapter 4—will enable the COCOMs not only to call forward materiel

as required, but also to maintain total visibility of that materiel flowing through the ports of debarkation and into the area of operations.

IV. FLOW OF SUSTAINMENT – THE DISTRIBUTION PROCESS

To avoid "pauses" in combat operations and a loss of operational momentum, the flow of sustainment supplies to combat forces must match consumption. Units currently deploy with five days of sustainment supplies and depend on the mobility system to keep them sustained and moving. Because DoD relies primarily on commercial rather than organic lift for sustainment, it must be prepared to immediately activate readiness programs like CRAF (for access to commercial airlift) and VISA (for access to commercial sealift), if volunteer contracting fails to keep pace with mobility requirements.

Access to military and commercial lift assets provides capability, but the department must also have processes in place to gain and maintain real-time asset visibility for sustainment supplies from "point of origin" to "point of delivery" in the battlespace – normally at the supply support activity level for Army and Marine Corps units. The department must continue, and where possible accelerate, implementation of radio frequency identification (RFID) and similar technologies to provide total asset visibility for sustainment supplies moving through the distribution system. The department should integrate such technology with current and emerging information systems in order to provide commanders at all levels with a common operating picture for materiel moving in the supply chain. These processes are discussed in chapter 4.

The current system of using containers for shipment to theater distribution centers, then breaking the containers into smaller loads and shipping the supplies forward to the consuming units needs improvement. The emerging joint service war-fighting doctrine uses the theory of network centric warfare (NWC) to integrate military objectives. The current distribution system for ordnance and supplies is deficient in a number of areas that preclude or severely limit the use of NWC concepts. The deficiencies particularly affect the ability

to operate from a sea base. These deficiencies include ones in the following areas:

- Interoperability—inefficient throughput, manpower-intensive handling, excessive blocking and bracing, and service-unique and nonstandard packages for "stuffing" (loading into) the ISO 20- and 40-foot containers
- Asset tracking—inaccurate and limited asset visibility for multipacks or the pallet- or item-level contents of the ISO container
- Stowage density—hazard-class-imposed restrictive segregation of ordnance components

The use of a joint, modular, intermodal distribution system could reduce or eliminate these deficiencies. Such a system would use modular unit loads (of both ordnance/ammunition and other supplies) and modular intermodal platforms for efficient end-to-end movement through the DoD distribution process. The ability to move assets from commercial distribution systems to and from the service-unique systems at faster rates with reduced manpower and less requisitioned materiel should be a major objective. It would enable better sea-base operations, as well as movements through an intermediate staging base. Improved handling and enhanced real-time in-transit asset visibility (ITV) would create an end-to-end distribution system. The department should continue to pursue development of the joint modular intermodal container and the joint modular intermodal distribution system concept.

V. MOVEMENT TO TACTICAL ASSEMBLY AREAS OR COMBAT LOCATIONS

Operations Iraqi Freedom and Enduring Freedom have reinforced the view that future conflicts will occur on asymmetrical battlefields. As recent operations have underscored, long lines of communication are always vulnerable to interdiction and disruption. Chapter 2 treated in detail the need for improved VTOL and ground transport capabilities for land and special operations forces. Future forces will require tactical air and ground mobility assets that have the following capabilities:

- Survivability — improved protection against small arms, improvised explosive devices (IED), mine, rocket-propelled grenade (RPG), and overhead burst.
- Network centricity—real-time situational awareness (onboard communication and navigation equipment) for the war fighter to ensure that the right quantity and kinds of supplies and cargo arrive when and where needed.
- Distribution—the capability to load and unload intermodal cargo platforms and individually configured packages, without the use of external MHE, to and from combat platforms and/or between nodes and modes of transportation.
- Reliability, maintainability and supportability—improved systems reliability and onboard diagnostic and prognostic systems to identify maintenance needs and monitor performance.
- Operational range—the ability to traverse adverse terrain over greater operational distances. An important objective would be VTOL capability for moving a 20-ton payload 300–500 nautical miles, which chapter two discussed.
- Mobility—the improved ability within the supply chain to maintain pace with the war fighter to ensure "right-time" and "right-place" delivery of supplies.
- Force sustainment—ground transport that also has the capability to produce power and water to decrease the logistics footprint.
- Deployability—interfaces with the tactical, in-theater airlift in an operational configuration to enable rapid transition from deployment to combat operations.

The department should encourage TRANSCOM, the regional COCOMs, and the services to determine future force tactical airlift and ground mobility requirements and program the resources to acquire the necessary assets with the capabilities outlined above to equip, move, and sustain the force.

VI. SUPPORT OF MAJOR COMBAT OPERATIONS –AN EXAMPLE

The task force sought to find a mix of mobility forces to support U.S. strategy, particularly the ambitious "10-30-30" stretch goals for major combat operations. The demand for rapid force projection makes speed of strategic movement imperative. Two sets of scenarios define the challenge:

- First: A campaign in which there are no forward-deployed U.S. forces or allied forces in the area of operation and forced entry might be required. Only austere seaports are available as a result of anti-access measures. The task force believes that while this scenario is not the most likely to occur, it is the most challenging and operational failure would have major consequences for the campaign.
- Second: A campaign in which deploying forces reinforce forward-deployed and/or allied forces and deep-draft ports are available. This may be the more likely and most important contingency and easier for mobility forces to support.

For both scenarios, seizing the initiative in the first few days of the campaign requires attaining air superiority, neutralizing enemy air defenses and surface-to-surface missile threats, and, in the first scenario, possibly seizing and securing an airfield and port to allow force buildup. Accomplishing these objectives would probably require the positioning of carrier strike groups and expeditionary strike groups and establishing a land-based strategic air bridge and forward operating bases in the COCOM's area before D day or as soon thereafter as possible. These actions would set the conditions for entry (forcible or not) of land forces. The synchronization challenges of such a rapidly deploying force are formidable.

First, sufficient aerial tankers and strategic airlift are needed to establish an air bridge to the region, deploy the land-based tactical air elements, maintain operational momentum, and insert and sustain special operations forces. If a forcible-entry airborne task force is required to seize airfields, or an equipment-intensive medium–battalion-size task force is needed to reinforce quickly, demand for

airlifters could exceed availability. Compensating for this deficiency would require operational sequencing. From the briefings the task force received, there was doubt that sufficient C-17 sorties would be available to meet combat requirements for forcible entry operations, along with other condition-setting tasks noted above—given the simultaneity implied by the first scenario.

During the same limited period, carrier strike group(s) would have arrived on station to contribute to setting conditions for land operations. Finally, expeditionary strike group(s) with Marine expeditionary units for amphibious forcible entry operations will need to arrive (in the first scenario). For this part of the operation, the amphibious forces and the Navy-Marine tactical air forces appear to be sufficient to accomplish the task.

In both scenarios, sufficient heavy/medium brigade task forces must become employable within 10 to 15 days of campaign initiation in order to sustain the momentum of initial land force operations. Achieving this objective represents the most challenging aspect of strategic mobility, since airlift will not provide a suitable option for moving the major elements of a heavy/medium land force.

As the DSB Sea-Basing Study indicated, it is feasible to provide a sea-basing capability in the 12-year time frame to sustain the initial entry of amphibious forces and project and sustain a brigade as part of the reinforcing forces. However, one of the major challenges in developing such a capability is the ability to transfer heavy loads at sea in sea-state condition greater than 2, enabling the sea-based force to take full advantage of the JHSV high-speed "connector" role. The task force believes that achieving a sea-state 4 or better capability is feasible, and the R&D should go forward to achieve this capability.

However, for both sets of scenarios the task force could find only one other possibility in the next 12-year period that would allow reinforcing heavy/medium brigades to arrive in the battlespace in time to maintain the momentum of initial operations: the joint force commander could move the Army and Marine afloat pre-positioned equipment sets without public notice, as with carrier and expeditionary strike groups, to the threatened region prior to D day.

In the first scenario, the combatant commander could move the pre-positioned sets to an intermediate staging base in the region of the campaign, fly the troops to the base, disembark the equipment, marry equipment and troops, arm and fuel, and embark units on the intratheater high-speed vessels.

In this scenario, the units would then disembark in previously secured, austere battlespace ports in a ready-to-fight condition. The task force concluded that planning should assume that a deep-draft port probably would not be accessible in the early stages of operations. Arrangements with a friendly nation(s) in the region—also prior to the initiation of conflict—would allow the use of one or more deep-draft port(s) with a nearby international airport (that could accommodate CRAF passenger aircraft) and within 1,000–1,500 nautical miles of the area of operations as an intermediate staging base (ISB). To avoid congestion in the ISB, the arrival of the troop units should coincide with the arrival of the pre-positioning vessels (LMSRs and MPS) and the high-speed intratheater vessels — the JHSV described earlier. With a 1,000-ton payload, the 20–30 JHSV could transport a heavy/medium BCT with several days of sustainment in a single lift.

The JHSV could transit the sea between staging bases and previously secured ports in the operational area in approximately 24–36 hours and discharge their brigade combat team units ready for employment in about two hours—approximately five to six days after arriving at the ISB. The vessels would return to the staging base and embark a second brigade combat team with accompanying sustainment. They could then continue to cycle remaining brigades and sustainment, as well as assist in the deployment of the sea-based Marine brigade, until it became feasible to establish port operations to accommodate deep-draft conventional sealift.

One disadvantage of this option is that moving brigade combat teams into the operational area one at a time may not sustain operational momentum. There are at least two options available for inserting the pre-positioned brigades more quickly, if ISB and operational-area ports and airfields are available. One option is to acquire one or more additional brigade combat team "sets" of JHSV

(with 20–30 per set), allowing insertion of two of the six pre-positioned brigades at a time. A second option is to transport portions of the brigades by air from ISB(s) to the operational area, with the remaining elements embarked on JHSVs. The first option would entail an additional $4–$6 billion in acquisition costs per JHSV brigade "set"; the second would place even greater stress on the airlift fleet, assuming operational-area airfields could even accommodate the required C-5, C-17, and/or C-130 airlifters.

There is no question that this method of completing the deployment into austere ports is exceptionally complex. It requires detailed planning to synchronize the task force—including synchronizing loaded pre-positioned vessels with troop arrival at the airport, transit to the port, joining troops with their combat and support vehicles, setting up arming and fueling stations, and sequencing the units through those stations and on to the JHSVs. The embarkation process resembles staging for an airborne assault. Disembarkation requires another synchronization process for the 20–30 vessels arriving nearly simultaneously.

The employment of this afloat pre-positioning-ISB-JHSV option (with possible airlift augmentation) appears, however, to be the only option available in the next 10 to 15 years to allow rapid reinforcement in the set of scenarios where sea access is limited to austere ports. The development of a fleet of AAHSS would expand deployment options considerably.

Rapidly deploying heavy/medium brigade combat teams also represents the challenge in the second scenario. Seaports and aerial ports are available in this case, but the campaign requires land combat power to reinforce forward-deployed forces. Here also pre-positioned equipment sets, loaded by the task force to facilitate rapid reception and staging, represent the only way in the next decade or so to get reinforcements into the area of operations and employable in 10 to 15 days.

Even if a deep-draft port(s) is available, the intratheater vessels could still meet the requirement to distribute the force to areas with austere port access closer to tactical assembly areas.

Finally, expansion of the sea-basing concept in the 12-year period can assist in the generation of both initial entry and reinforcing forces. A successful effort to overcome the technical challenges of "at-sea" transfer of heavy equipment would allow high-speed intratheater vessels a shorter cycle for moving units or sustainment. Thus, sea-basing could be a major source of sustainment of the land force in the reinforcing phase.

VII. RECOMMENDATIONS

Based on the above discussion, the department should develop an acquisition program for mobility capabilities to:

- Determine the airlift requirements to project airborne and medium task forces into the operational area by air while also projecting and sustaining special operations, land-based tactical air forces, and the air bridge for major combat operations and sustaining air commitments generated by other elements of the national defense strategy
- Keep options open to continue acquisition of the C-17 beyond the currently programmed fleet as "insurance" against the need to execute several of the above contingencies nearly simultaneously.
- Add seabasing capability with an at-sea transfer capability in sea state 4 for one Marine Expeditionary Brigade (MEB)/medium Army brigade size force.
- Implement the actions suggested by the DSB Task Force on Aerial Refueling. Begin by 2007 to recapitalize the Air Force tanker program.
- Modify the CRAF program to provide an annual "assured business" line in the Transportation Working Capital Budget for passenger and cargo capability and eliminate the "last seat available at a contract price" clause in the GSA city pairs contract.

- Conduct the R&D program for AMC-X with the objective of fielding a STOL/SSTOL-type aircraft for intratheater lift and sea-base operations, to eventually replace the C-130.
- Pursue the JHSV program with the objective of acquiring sufficient high-speed intratheater vessels (JHSV) with the capability to access austere ports to enable early land-force employment in the operational area, operational maneuver, and sustainment support.
- Conduct an analysis of available options to recapitalize and modernize the RRF and the FSS fleet, including possible use of a strengthened MSP to replace some surge ships in a reduced RRF.
- Develop incentives for the CONUS strategic seaports to improve their infrastructure.
- Initiate the R&D program required to design a new vessel (AAHSS) that might overcome the numerous technical constraints associated with achieving higher speeds with adequately sized payloads while being able to access austere ports. Determine the technical feasibility and likely costs to feed an analysis of alternative means of achieving objectives for rapid force projection of heavy/medium forces.
- Assure the availability of adequate numbers of C-17 and C-130 aircraft with defensive systems for sustainment and assault support. Harmonize USAF and Marine Corps operational procedures for assault support of land forces.
- Conduct R& D efforts to evaluate the feasibility of modernizing DoD's tactical distribution vertical-lift capability with the long term objectives of an unrefueled range of 300 to 500 nautical miles and a 50,000-pound payload.
- Procure sufficient modernized tactical trucks (that is, with GPS navigation, onboard communication, and crew protection) to support a force sized to "win decisively."

- Provide Commander, TRANSCOM access to forces required to establish theater seaports and inland theater hubs.

CHAPTER 4. DEPLOYMENT AND SUSTAINMENT PROCESSES

The combination of the global security environment confronting the nation after 9-11 and the more demanding force-closure goals required for rapid decisive operations heightens the demand for mobility force platforms and support, but also heightens the need to overcome chronic mobility process challenges, which have plagued U.S. operations in the past. The transformation of traditional deployment operations into a major element of global maneuver for rapid decisive operations and early conflict termination must drive revision of the present approach to deployment to eliminate delays endemic in planning and execution processes.

Joint force employment concepts are becoming more simultaneous, distributed, continuous, decentralized, and focused on applying capabilities to achieve desired campaign effects than ever before. Yet, force projection and sustainment planning operations remain largely sequential, linear, scheduled, and centralized—delivering commodities instead of employable and sustainable forces.

The refinement and revision process must start by changing the manner in which the department plans and executes deployments and sustains deployed forces. The following represent a series of suggestions that the Mobility Task Force believes would facilitate improvement in the planning and execution process.

I. GLOBAL POSTURE AND BASING STRUCTURE

The United States is currently involved in a major review of its global basing structure. Not only a new set of security challenges, but also a new and different set of security relationships with real and potential allies, have dictated this review. Decisions flowing from this review will likely result in the consolidation of infrastructure in Europe and Northeast Asia as well as movement of some existing capabilities forward into the Pacific and Indian Ocean regions. These and other actions will result in a potentially expanded role for our allies. The emphasis will rest on the capabilities required to project

power instead of the number of troops forward deployed. Such decisions will place a significantly greater emphasis on U.S. strategic mobility forces and require those forces to possess not only global reach, but also responsiveness and the capability to surge from CONUS bases.

To meet the need for responsiveness on a global basis, the United States requires in-place legal arrangements to provide rapid access to infrastructure both en route and in the area of operations. The Mobility Task Force does not possess sufficient information on the global repositioning plan to make specific recommendations on such legal arrangements.

II. DEPLOYMENT PROCESS OWNER

As discussed in chapter 3, the department uses the same mobility network and assets – frequently simultaneously – not only for deployment, but also for distribution, sustainment, and redeployment. The task force has pointed out that sustainment operations must commence nearly simultaneously with the start of deployment operations. And, in any complex operation, distribution requirements instantly compete with deployment requirements. TRANSCOM is the department's designated single manager for defense transportation in both peace and war. DoD has organized TRANSCOM with functional component commands to operate and manage both the military and commercial segments of the defense transportation system efficiently and effectively.

In its study on enabling joint force capability[20], the DSB has pointed out that within the past year and a half, there have been significant changes and expansion in the assigned responsibilities of the combatant commands, as the department defines and addresses capability gaps important to enabling joint capabilities. The report concluded with the recommendation that the Secretary of Defense and the Chairman of the Joint Chiefs of Staff "re-examine the magnitude and the scope of the portfolio of missions assigned to

20. Report of the Defense Science Board Task Force on Enabling Joint Force Capabilities (August 2004)

JFCOM to ensure that the tasks essential to enabling joint forces capabilities can receive the needed attention. This will require an examination of newly assigned missions and pre-existing missions to provide for an executable portfolio of missions." Moreover, the DSB report suggested that JFCOM has accumulated a significant number of missions for which it possesses neither the personnel nor resources to execute properly. It recommends that the department "provide the needed manpower support for combatant commands to succeed in executing newly assigned missions essential to effective joint operations." This Mobility Task Force strongly supports that recommendation.

With the recent designation of TRANSCOM as the owner of distribution processes, the Mobility Task Force believes that the command is also best positioned to be the owner of deployment processes. By designating TRANSCOM as DoD's deployment process owner, the Secretary of Defense would give responsibility for deployment and distribution to the command charged with operating the department's defense transportation system in peace and war. It is, thus, the command with the best capability to execute the deployment and distribution missions.

In the task force's view, DoD should transfer deployment process ownership responsibility to TRANSCOM; JFCOM should retain responsibility for the force provider mission. The resulting authority structure would require a continued (and hopefully increased) level of coordination between JFCOM and TRANSCOM as U.S. forces transition from mobilization to deployment.

Future Mobility Forces

The task force's terms of reference asked, "How will the Department of Defense manage the development of a future transport architecture that spans several armed services and multiple technology areas?"

Recognizing that mobility forces represent a joint resource that supports joint requirements, the Secretary of Defense should task TRANSCOM, with the help of the services, to establish a roadmap for

modernization, if this system of systems is to meet the needs of the national security strategy. The task force found that no DoD organization possesses the responsibility or authority to assess the changes made in defense strategy and operational concepts over the past four years and develop a plan for necessary changes to mobility systems to enable achievement of the strategic goals. The task force believes that a joint command with the requisite expertise and legitimacy should have this responsibility. TRANSCOM meets those criteria.

TRANSCOM can fulfill the responsibility to be the architect of a future mobility system of systems. With the requisite funding and acquisition authorities, it would integrate deployment and distribution tasks and develop the roadmap for improvements to the mobility system of systems. That roadmap should include new strategic systems such as the austere-access high-speed ship, intratheater systems such as the newly initiated AMC-X program, improvements to platforms, and improvements to processes to make more effective use of mobility assets. The services would continue to be responsible for platform acquisition. The task force has heard concerns that TRANSCOM would act mainly as a platform advocate. That need not happen, given clear guidance, relevant resources, and explicit accountability. Special Operations Command has similar— and more far-reaching— responsibilities and authorities; its experience is instructive and an example for what TRANSCOM can bring to architecture development and management of joint mobility systems.

Planning and Execution Process

Overall, DoD's transportation, mobility, and distribution processes need reforming to facilitate a more responsive employment, sustainment, planning and execution process. As their campaign plans evolve, regional COCOMs must be able to adapt their force flow plans (time-phased force deployment plans) rapidly and continuously to changing needs, revised sequencing, and updated timing of force and sustainment packages. The reality of modern warfare is that deployment, employment, sustainment, and redeployment frequently occur as simultaneous operations.

Therefore, the demand is for improved simulation, modeling, and decision tools to avoid confusion and delays during critical operations.

The current challenges are a product of inadequate and/or immature decision tools, incomplete core infrastructure modernization, shortfalls in global infrastructure availability, confused command and control (C2), and a continuing shortage in numbers and capability of platforms. While development efforts continue, there remains a shortfall of Web-based decision tools capable of providing for the rapid force buildup required when "sourcing decisions" occur. Perhaps the greatest need for the system is a Web-based tool that has "middle ware" that can ride on the Joint Operation Planning and Execution System (JOPES) of record—one that accommodates "level-6" movement requirements and that will enable regional combatant commanders to write to the system of record and record changes as priorities and intent change.

Today, U.S. transportation and mobility forces operate in a world of high-side classified email "newsgroups" that frequently never get posted to the JOPES force-flow data. As an example, for Operations Enduring Freedom and Iraqi Freedom, (OEF/OIF) there were over 16,000 newsgroups, none of which posted to the JOPES system of record. The Mobility Task Force is aware that over the past year and a half, TRANSCOM and CENTCOM have cosponsored development of a new system called Agile Transportation 21 (AT21). This is an advanced concept technology demonstration (ACTD) designed to collect movement requirements (from sourcing) more accurately and to optimize available lift in execution.

This fall or winter, USCENTCOM will conduct an AT21 military utility assessment (MUA) at MacDill Air Force Base in Florida, in cooperation with TRANSCOM at Scott Air Force Base in Illinois, and the CENTCOM Deployment and Distribution Center (CDDOC) in Arifjan, Kuwait. The intent is to assess the ability of AT21 to capture emerging requirements and optimize available lift to execute a deployment mission. If successful, the department should deploy the AT21 to all regional COCOMs, to TRANSCOM, to JFCOM, and to each of the commands' components.

Acknowledging this effort, work must continue to ensure the availability of a Web-based tool to provide the flexibility to make rapid and accurate changes to the force list and to make that information immediately available to all those affected. At the same time, the department should give consideration to developing a system that uses icons to represent fixed force modules, with detailed data on movement characteristics behind the icons, so that force planners can "click and drag" to develop a force list quickly. The system would automatically compute the movement requirements for that force. Such a tool would then finally, truly provide the ability to rapidly change the force flow and recalculate movement requirements. Such a 21st-century decision tool could ultimately provide a mix of lift options for decision makers or optimize requirements against available lift assets. Finally, the department should take action to restructure the joint deployment system fundamentally to create a responsive, modular system, common not only to CONUS-based, but theater-based and reserve component forces as well.

Training, Rehearsals, and Exercises

The department should take action to make force assembly and movement to ports of embarkation more efficient. This change will involve eliminating unnecessary steps and delays and improving the operations at all transportation nodes. Part of the solution may include emphasizing discipline in the processes and systems. The services and joint commands must train users of the process to comply with procedures. They must also sustain personnel longevity in positions so as not to lose the effectiveness of training over the typical military job cycle. The system can provide training through simulations, exercises (such as sea-deployment readiness exercises [SDRES]), and the movement of units for major field training exercises.

The department must fix responsibility for those authorized to make changes and hold individuals accountable. Specific areas of accountability should include the items to be transported, item characteristics, loading parameters, available square footage for stowage, and many other factors. At the same time, DoD's processes

and system must remain flexible enough to handle the volume of changes inherent in dynamic military operations.

But efficient assembly and embarkation is not solely a military issue. The stevedores loading the vessels, securing the equipment to the decks, and assisting or preparing the manifest must also receive adequate training. Handling—loading, stowing, and tying down--military equipment is different than handling commercial equipment, and stevedores need practice and experience handling military equipment. Military leaders must make a concerted effort to establish relationships with civilian leaders—management and labor—in the ports of embarkation.

Continuous Flow of Materiel and Mobility Assets

Eliminating gaps in the flow of forces and sustainment into the operational theater is imperative for gaining and maintaining momentum and for seizing the initiative in combat operations. This task requires changes in process and the selection of appropriate platforms. The first imperative for eliminating gaps in the flow of forces and sustainment into the theater is development and maintenance of an in-depth knowledge of the theater, the area of operation (AOR), and the platforms and processes needed for deployment and sustainment. The combination of an understanding of terrain, weather patterns, indigenous culture, work habits, and host nation capabilities, along with knowledge of U.S. platform capabilities compared to the range of requirements, would help ensure consistent, reliable, and timely delivery sufficient to sustain operations.

Second, information technology must be interoperable within and among service systems. This will require a joint open-system architecture supporting logistics and finance systems. The department must eliminate service "stovepipe" systems and enforce compromises to ensure that systems are both robust and interoperable.

Other factors influencing the continuous and uninterrupted flow of forces and sustainment include force stationing and basing. Forces

originating outside CONUS and/or the destination AOR may encounter difficulties gaining "host nation" approval or support for movement to SPOE, marshalling space at the SPOEs, gaining approval for overflight of origin or en route countries, or overcoming other restrictions that impede their deployment.

An additional consideration will be the availability of sealift at the point of origin, and the time required to obtain and position that sealift. Traditionally, surge sealift capability (RRF vessels) resides in multiple locations in the United States. Activating these vessels, loading the equipment for deployment units, and sailing to overseas SPOE inevitably requires additional time. Possible solutions discussed elsewhere in this report include positioning RRF vessels near potential overseas out-load ports for U.S. forward-deployed forces, increasing the number of pre-positioned vessels, changing the distribution, mix and/or location of the vessels at anchorages around the world, and acquiring a different mix of mobility forces. Additional or new mobility assets—sealift, airlift, air-refueling, and/or surface movement vehicles— will also contribute to a smoother flow of materiel into, through, and out of the theater of operations.

Pre-positioning Policy

As previously discussed, the pre-positioning of unit sets of equipment is the most effective way to improve DoD's ability to meet the desired 10-30-30 goals. Decisions regarding pre-positioning of equipment must also include choices on the make and model of equipment for inclusion in the unit sets. Traditionally, the Marines place their newest models on MPS ships, while the Army has retained its most modern equipment for use in active units for training and then deployment with the follow-on or reinforcing echelons. This policy has resulted in the first-to-fight units frequently drawing unfamiliar, older equipment from the Army's pre-positioned sets.

There are also often equipment shortages and line-item substitutions in the pre-positioned unit sets. Moreover, low-density items such as helicopters and missile defense systems are not

typically pre-positioned in the afloat sets. Due to funding constraints, secondary items and many sets, kits, and outfits may either be older models or not present. Deploying units usually have not trained with the older models of pre-positioned equipment and may not be aware of the equipment shortages or substitutions. These policy decisions inevitably have impaired the effectiveness of the first arriving combat forces. The department needs to establish clear policies before reconfiguring and stowing pre-positioned sets after the conclusion of OIF.

III. THEATER-LEVEL COMMAND AND CONTROL AND THE DDOC

At the theater level, the CENTCOM Deployment and Distribution Operations Center (CDDOC) continues to demonstrate significant benefit to the war fighter in synchronizing logistics operations (transportation, supply, and distribution). Essentially, combining knowledge of national (strategic) systems and experience with in-theater capability, the CDDOC has established a point of departure for future expanded joint theater logistics frameworks (discussed later in this chapter).

If events transpire as the task force briefings have suggested, TRANSCOM will coordinate in FY 2005 with the Joint Staff J4, JFCOM, and the Regional Combatant Commanders (RCCs) and services to reach agreement on an operational concept for joint theater logistics C2 and supporting doctrine. In the interim, while majority ownership of the DDOC is appropriately under the COCOM, the role of TRANSCOM as DoD's joint distribution process owner (and also, if implemented as suggested, its joint deployment process owner), suggests that it retain responsibility for the concept's deployment and evolution, and an influential role in its execution.

Reception, Staging, Onward Movement, and Integration (RSOI)

To improve effectiveness of deployment and sustainment operations, the department should take steps to shorten the time required for reception, staging, onward movement, and integration of

forces (RSOI). Especially in the battlespace, forces must disembark and/or land ready to fight or perform support missions. This criterion must override the efficient use of vessels and aircraft in the deployment process. Current impediments to, and suggested actions to address achievement of, this objective are discussed below.

In the past, ships typically were administratively loaded without regard to unit integrity in order to maximize available space. On arrival in the theater, the logistical base had to off-load, stage, and organize equipment into unit sets. This procedure ensured that the minimum number of ships were used to complete a movement and obviously contributed to efficient use of shipping. However, it also was a major impediment to RSOI because it significantly increased the time required in-theater to prepare units for combat.

To shorten the time required for RSOI, the task force should load its ships with emphasis on maintaining unit integrity to the maximum extent. Equipment should be discharged in unit sets, task-organized, ready to take on fuel and ammunition, and ready to move directly to tactical assembly areas or into combat. The trade-off for this significant process improvement will inevitably be an increase in the requirement for ships to move a given size unit (and thus a larger sealift force).

A second way to shorten the time for RSOI in the battlespace would be the use of an intermediate staging base. In this concept, the logistical system would transport the equipment and supplies from the United States or point of origin to an intermediate base 1,000 to 1,500 miles from the objective. At that point, strategic lift assets would discharge their cargoes, the arriving forces, staged or organized by unit or task force set, would "marry up" with their equipment, and then load by task force onto intratheater lift assets such as the proposed joint high-speed vessel for final movement to the objective. On arrival at the port of discharge (POD) in the objective area, the task force would then discharge its equipment, already organized for combat and ready to take on fuel and ammunition. If resistance is expected on arrival, during discharge, or immediately after discharge, the task force commander would consider combat loading (so that vehicles and weapons systems are

fully fueled and armed when loaded aboard ship and therefore immediately ready for combat once discharged). Combat loading poses significant safety risks. Therefore, commanders on the scene would have to weigh the risk of a fire or explosion while equipment is onboard a vessel against the risks of port denial and/or immediate combat.

Command and Control—a Joint Logistics Command

The Terms of Reference asked for an examination of "the military advantage we can achieve by the use of joint logistics for joint forces delivered by joint means."

The entirety of a deployment and distribution operation, including options for and consequences of changes, must be visible to the joint force commander. Managing these processes and anticipating and/or reacting to inevitable changes and challenges requires continuous situational awareness, as the earlier discussion of the DDOC noted. The need to ensure proper leadership and management of these processes suggests the time has come for a *joint logistics command* (JLC) for each regional COCOM, as the COCOM's focal point of logistics distribution–related functions. The current manner of managing common theater supplies and services e.g., food, fuel, theater air and sealift, continues to be ad hoc, service-centric and inefficient. A joint logistics command would extend to the COCOM the concept of central management of common supplies and transportation now employed in CONUS and would support the operating forces.

Deployment and sustainment of operating forces in execution of the current measures in support of the global war on terrorism (GWOT) has clearly focused attention on the integration of strategic and operational deployment and distribution capabilities within the AOR. The ability to mobilize forces in CONUS, deploy them great distances to the AOR, and rapidly employ them in the theater of operation is becoming the norm instead of the exception. The demand for logistics (sustainment) in support of the GWOT will continue to place a strain on DoD's limited air and surface transportation assets. Distribution systems and supply chain

processes are also becoming more closely integrated and interconnected, both in the world economy and within the department. Deployment operations and distribution operations are also more intertwined. Instead of separate actions, they are now operating through the same defense transportation system with the same pool of assets.[21] A *joint logistics command* (JLC) would serve as the organization required to synchronize the logistics effort demanded by today's strategic environment.[22]

Implementation of a joint logistics command would also provide the command-and-control organization necessary to make COCOM directive authority for logistics a reality.

IV. FINDINGS AND RECOMMENDATIONS

- Establish a joint logistics command for each regional combatant command. Develop the necessary doctrine, organization, techniques, procedures, manning, and training plans
- Designate USTRANSCOM as the deployment process owner and the architect of the future strategic and theater transportation systems, invested with the necessary funding and acquisition authority
- Load ships by task force configuration and not to maximize the stow factor in order to expedite RSOI
- Consider the implications of OSD's global restationing of forces study for additional or repositioned strategic lift assets to ensure uninterrupted flow of forces and sustainment
- Develop a flexible Web-based deployment planning and execution tool
- Ensure information technology is interoperable and compatible between and among the services

21 See earlier discussion on Deployment Process Owner.
22 See Appendix VII for a more detailed discussion of the Joint Logistics Command.

- Negotiate legal arrangements to provide rapid access to infrastructure both en route and in the area of operations.

CHAPTER 5. RECOMMENDATIONS

This chapter summarizes the task force's recommendations, developed from the analyses of the preceding chapters. It is organized into two parts to respond to the terms of reference. The first deals with acquisition issues. It presents the task force's recommendations for acquisitions of capabilities that would enable rapid force projection, the uninterrupted flow of reinforcements and sustainment required by major combat operations, and a successful response to other contingencies. The task force has identified those capabilities the department can acquire within a 12-year period and those that require a sustained R&D program. The latter represent important capabilities probably attainable in the longer term—20 to 25 years.

The task force also recommends process and management improvements that would lead to more effective employment of present and future mobility assets in deployment and distribution operations. The task force believes that mobility assets represent components of a system of systems that includes end-to-end deployment and distribution processes that will determine its ultimate effectiveness. Simply buying more platforms is not sufficient to enable the department to realize potentially large benefits from the mobility system. The department must also develop and institutionalize the management and process improvements recommended by the task force.

I. CAPABILITY ACQUISITIONS

Rapid Projection of Heavy/Medium Land Forces

The task force found that a particularly critical need is the mobility force capability to project heavy/medium land forces into an area of operations in time to gain and maintain the momentum of initial operations—especially when the enemy employs access-denial measures. Such measures could prevent or delay the arrival of the

brigade combat teams that the Army and Marine Corps plan to have available for such operations.

The two services have programmed or planned that equipment sets for six brigade combat teams be pre-positioned afloat. This significant land force capability can be moved to the vicinity of the area of operations. The Army has programmed three more sets of equipment for land-based pre-positioning. Positioning first-line equipment in these "first-to-fight" sets, along with attack, assault, and cargo helicopters, would boost the combat power they bring to operations. Conducting reception and staging at an intermediate staging base in the vicinity of the area of operations and moving the units to the area of operations on high-speed intratheater vessels could overcome access-denial measures.

Recommendation 1

The task force recommends that the department approve the pre-positioned force capabilities described above: six afloat sets with first-line equipment and helicopters as well as three land-based sets.

- For potential conflicts in which it is not practical to marry combat personnel with their afloat pre-positioned equipment in the operational area, the task force recommends pursuing the Joint High-Speed Vessel program with the objective of acquiring a fleet of high-speed (40 knot), intratheater vessels capable of accessing austere ports. The task force recommends that sufficient vessels be acquired to enable the movement of one brigade combat team from intermediate staging bases to the area of operations in a single lift. The department should acquire access to potential intermediate staging bases. The task force also supports the recommendations of the DSB sea basing study to add seabasing capability with an at-sea transfer capability in sea state 4 for one Marine Expeditionary Brigade (MEB)/medium Army brigade size force and recommends the R&D necessary to provide that capability.

The task force further recommends that TRANSCOM and the three services provide the vessel designers with necessary data characterizing likely ports and engage the regional COCOMs in developing employment concepts.

High-speed Transoceanic Sealift

The terms of reference asked the task force to assess the desirability and possibility of carrying out a significant set of interventions directly from CONUS. A not-insignificant capability exists now and will continue into the future: it consists of strategic airlift and maritime strike and amphibious capabilities. However, possible future interventions may require rapid deployment, directly from CONUS, of the reinforcing and sustained combat capabilities present in heavy/medium land forces. The task force concluded that adding such a capability to the nation's arsenal could protect against the risk that staging bases may not be available. It would also enable a unilateral force projection option, should the political situation demand it.

As noted in chapter 2, such a capability to deploy heavy/medium forces from CONUS using high-speed sealift would require vessels capable of significantly larger payloads and longer range than those contemplated in the Joint High-Speed Vessel program. They would also need to be able to access austere ports and to accommodate troops brought aboard a day or so prior to debarkation in the operational area. Chapter 2 describes several major technology challenges that R&D must overcome before both performance capabilities and acquisition costs become clear. However, the task force concluded that there is considerable probability that an adequately funded research and development program can produce such a vessel. The task force estimates that R&D costs could be $5–10 billion over the next 15 years. A four-BCT capability (possibly twelve vessels) would cost roughly $12.2–14.7 billion plus $2.4 billion for 20-year life cycle sustainment (the ROS rate of $10 million per year per vessel) and the $5–10 billion in R&D, or $19.6–27.1 billion in total.

Once technical barriers and costs are better understood, the austere-access high-speed ship (AAHSS) should be compared with the option of additional afloat pre-positioning.

Recommendation 2

The task force recommends that the Secretary of Defense initiate the R&D effort to develop a transoceanic high-speed vessel capable of accessing austere ports. As in the case of the Joint High-Speed Vessel program, it is imperative that vessel designers receive port characterization data and the users' commitment to active participation in the design effort to weigh potential trade-offs. In addition, designers need better design and analysis tools to help them overcome formidable technology barriers such as friction-drag reduction.

Replacing Aging Sealift

For the foreseeable future the nation must rely on a sealift "reserve" to transport reinforcing forces, sustainment, and reconstruction supplies from CONUS and other sources to operational theaters throughout a campaign. Chapter 3 describes the need to either plan for recapitalizing aging parts of the Ready Reserve Force (RRF) and the eight fast sealift ships (FSSs) or rely on a modified Maritime Security Program to provide the necessary capability.

Recommendation 3

The task force recommends that TRANSCOM, with the Navy, conduct an analysis of the likely alternatives for replacing aging RRF and FSS capabilities and propose a course of action to the department by the end of FY 2007.

Strategic Seaports of Embarkation

Chapter 3 describes the critical importance of the "strategic seaport" component of the mobility system of systems for rapid deployments.

Recommendation 4

The task force recommends that DoD enter into a partnership with the most important ports to invest in improvements to reception, staging, and loading infrastructure that will enable faster embarkation of equipment and supplies.

Strategic Airlift

Chapter 1 describes the task force's understanding of the major challenges and risks to national interests posed by the global war on terrorism. The strategic environment is one of multiple, contemporary, and diverse campaigns in which U.S. forces have engaged, are presently engaged, or are likely to be engaged for many years. Such efforts require the extensive use of strategic airlift and aerial tankers. Given such an environment, the task force became concerned that the size of the organic airlift fleet may not be sufficient to meet future commitment levels. Moreover, there is the distinct possibility that programmed airlift lacks the reserve capability to allow timely response to other demanding contingencies, especially strategic surprises requiring urgent action. This situation suggests the limits of forecasting scenario-based fleet size and argues for some "insurance" that respects the uncertainties of the future. The department has only a relatively short time to decide whether to add to the organic strategic airlift fleet before completion of C-17 production in 2008. The task force recognizes that each five aircraft acquired represent a billion-dollar initial investment and require another billion in life cycle support.

Recommendation 5

The task force recommends that the department keep open an option to continue C-17 production beyond 2008.

Recommendation 6

The task force understands the vital role played by the aerial tanker fleet and supports the recommendations of the DSB Aerial Refueling study and initiation of recapitalization by 2007.

Recommendation 7

The nation's investment in an organic strategic airlift fleet has been a major differentiator in the achievement of national security objectives. The task force recommends continued evolutionary improvements in both the C-5 and C-17 to maintain their capabilities into the future. The department should continue to study potential long-term replacements, although the task force does not recommend commitment at this time to any particular program.

Intratheater Airlift

Organic intratheater airlift plays a vital role in joint operations to enable operational maneuver and tactical distribution. The C-130 fleet is aging and shrinking. It is time to invest in a program to replace it. *The R&D effort should be* integrated *with* development of *joint* and service *operations* concepts.

Recommendation 8

The task force recommends that the department support the Air Force's AMC-X program to develop a super-short takeoff and landing aircraft that meets jointly developed performance requirements. It would be the replacement of the C-130 and could become a primary connector for sea-base operations.

Modernization of Operational Maneuver and Distribution Capabilities

Four acquisitions in addition to the C-130 replacement could strengthen the joint force commanders' capabilities for operational maneuver and sustainment.

Recommendation 9

First would be the continued modernization of VTOL and/or STOVL aircraft to increase unrefueled range, payload, and reliability. Helicopters have been and are likely to continue to be essential to mission success. In Afghanistan, Iraq, and other interventions in

austere environments their capabilities have been crucial. As part of its modernization effort, the department should undertake a vigorous R&D program to evaluate the feasibility of fielding a 25-ton vertical-lift capability with an unrefueled range of 250–500 nautical miles to enable more options for operational maneuver.

Recommendation 10

The second acquisition would be defensive systems for all aircraft employed in combat areas to protect them against anti-aircraft missiles as well as communications and navigation suites to enable interoperability with ground, maritime, and other air elements. Such capabilities would improve land-force agility and reduce requirements for long-distance ground transport, with its inherent vulnerabilities.

Recommendation 11

The third recommended acquisition would involve the modernization of the large fleet of land-transport vehicles to provide protection of crew and cargo as well as onboard navigation and communications capabilities similar to the combat systems they support. Deliberate planning for these capabilities would avoid the inadequacies of the transport equipment that the land forces had to use in Iraq.

Recommendation 12

The fourth component of this suite of improved theater mobility systems would be the acquisition of the joint intermodal modular container recently recommended by the four service chiefs. It would replace the considerable variety of containers and pallets that currently frustrate the effective use of valuable transport platforms. The new, standard system would be compatible with commercial, international-standard containers as well as organic aircraft, vessel, and truck platforms.

Recommendation 13

The task force recommends that the department explore the following technologies and, where feasible and affordable, acquire the outputs and place them into service to improve battlefield distribution:

- GPS-guided parachutes and parafoils to achieve a low-dispersion cargo airdrop capability from altitudes that protect C-130 and C-17 aircraft from shoulder-fired missiles and small arms
- Unmanned ground vehicles to minimize personnel loss, act as decoys, expose intended ambushes, and allow the simultaneous use of multiple paths to the intended delivery point

Acquisition of Commercial Airlift Capabilities

For many years the Civil Reserve Air Fleet has had an established role in the deployment and distribution system of systems. The task force found that major restructuring in the competitive environment in the air passenger industry requires the department and GSA to modify present peacetime arrangements with the airlines to help them maintain their economic viability. The department relies on CRAF passenger capabilities as the principal means of deploying troops. The department's reliance on responsive, capable air cargo support also requires careful management of those relationships.

Recommendation 14

To assure the continued timely availability to TRANSCOM of capable passenger aircraft, the task force recommends facilitating the CRAF air carriers' seat management efforts by eliminating the "last seat available at the contract price" provision of the GSA City Pairs contract and providing a predictable level of funding. Elimination of this provision would allow the airlines to better adjust pricing on all seats after a cutoff date and improve revenue yield. The task force also recommends that DoD solidify the incentives for continued CRAF commitments by cargo carriers by providing a predictable

level of annual funding of defense cargo requirements to facilitate capacity allocations.

II. PROCESS IMPROVEMENTS

The recommended capability acquisitions are necessary to achieving the objectives established in the national defense strategy, and especially for carrying out rapid decisive operations. But they are not sufficient. Without process and management changes, deployment and distribution operations may improve little despite billion-dollar investments in platforms. Chapter 4 lays out the process and management improvements that the task force believes are necessary for the effective employment of mobility assets. Here we summarize the process improvement recommendations first and follow with the management improvements.

Recommendation 15

Accelerate the introduction of *end-to-end* collaborative-planning and execution-monitoring tools that are interoperable between joint commands or agencies and the services.

Improve the processes for joint force assembly and embarkation, including the reduction of sealift charter lead time. Field a knowledge system to facilitate continuous monitoring and feedback of the force-assembly and embarkation operations.

Develop processes and procedures to shorten the time required for force reception, staging, onward movement, and integration (RSOI), to include task force loading of vessels.

Provide Commander, TRANSCOM access to forces required to establish theater seaports and inland theater hubs.

Field a knowledge system to facilitate management of in-theater deployment and distribution operations. It should link to CONUS systems to provide a primary tool for end-to-end management of deployment and distribution.

Bring Air Force and Marine Corps C-130 operational procedures to the same expeditionary standards to facilitate assault support missions.

DoD should negotiate legal arrangements to provide rapid access to infrastructure, both en route to and in area of operations.

III. MANAGEMENT IMPROVEMENTS

The terms of reference tasked the group to evaluate two management issues

- "the military advantage that we can achieve by the use of joint logistics for joint forces delivered by joint means"
- "How will the Department of Defense manage the development of the future transport architecture that spans several of the Armed Services and multiple technology fields?"

Another Defense Science Board group (Summer Study 1998) answered the first question seven years ago. That study made the case that it was imperative for joint force commanders to employ their joint logistics resources to execute joint force projection and sustainment. Thus, they required a capability to manage those joint resources. Operations Enduring Freedom and Iraqi Freedom have once again illustrated the necessity for joint force commanders to possess a joint logistics command that implements the command's priorities for allocation of joint resources. Such resources include intratheater transport, infrastructure, assets, management organizations, and Defense Logistics Agency (DLA)-managed common supplies. Responsibility for managing service-peculiar weapons systems and equipment should remain with the service component commanders. Chapter 4 provides a proposed organizational construct.

With respect to the second question, future transport architecture management, chapter 4 makes the case that the department should vest deployment and distribution process ownership in the command that must integrate them in operations: TRANSCOM. As the process

owner, TRANSCOM is in the best position of any single joint organization to develop future transport system of systems. Such architecture development should not continue to be an ad hoc event every four years; it demands continued analysis work to maintain its relationship to changing defense priorities.

Recommendation 16

The task force recommends the creation of a joint logistics command for each regional COCOM, which would interface with TRANSCOM to provide the joint force commander with a seamless end-to-end deployment and distribution system.

Recommendation 16

The task force recommends that the department assign to TRANSCOM the same responsibilities and authorities associated with the deployment process as it has with the distribution process. It also recommends vesting in TRANSCOM the responsibility, authority, funding, and accountability associated with the management of the future transport system of systems architecture.

Recommendation 17

The task force recommends DoD allocate sufficient forces to TRANSCOM to operate theater seaports and inland theater hubs.

This page intentionally left blank.

APPENDIX I. TERMS OF REFERENCE

This page intentionally left blank.

THE UNDER SECRETARY OF DEFENSE

3010 DEFENSE PENTAGON
WASHINGTON, DC 20301-3010

ACQUISITION,
TECHNOLOGY
AND LOGISTICS

FEB 20 2004

MEMORANDUM FOR CHAIRMAN, DEFENSE SCIENCE BOARD

SUBJECT: Terms of Reference – Defense Science Board Task Force on Mobility

I request that you establish a Defense Science Board (DSB) Task Force to identify the acquisition issues in improving our strategic mobility capabilities.

The issues span the responsibilities of OUSD (AT&L). We expect difficult acquisition decisions. We know we need technological solutions. Logistic support of military action requires mobility. The department needs to understand how the strengths and weaknesses of current military transport relate to the general structure of future mobility.

"Transport", a technical term, means the movement of people and materiel across trans-oceanic distances, both inter-theater and intra-theater, in aircraft, surface ships, and submarines. "Mobility", a strategic term, covers the wider issues of how well our transport systems satisfy the operational demands placed on them in executing military movements, including distance, nature, scale, and urgency.

In that sense, mobility contains many unsatisfied operational and technical challenges whose resolution will require tough acquisition decisions. The Task Force should enhance our understanding of:

- the part transport plays in our present-day military capability – the technical strengths and weaknesses, the operational opportunities and constraints
- the possible advantage of better alignment of current assets with those in production and those to be delivered in the very near future
- how basing and deployment strategies – CONUS-basing, prepositioning (ashore or afloat), and seabasing – drive our mobility effectiveness
- the possible advantages available from new transport technologies and systems whose expected IOC dates are either short term (~ 12 years) or, separately, the long term (~ 25 years).

Thus, the insights are to be placed in a time phased "system of systems" framework.

The U.S. will continue to confront potential threats widely distributed in geography, nature, scale, and urgency. These will range from situations where our interests require division-sized "boots on the ground" to tailored forcible entry by units of Brigade or smaller size. Levels of force applied could range from ordnance delivered by air and naval assets to expression of national resolve by in-theater presence. Time scales will differ, as will the depth and sophistication of the adversary's defenses. The Task Force is to explore the entire multi-dimensional space.

The Task Force may assume that, at least for the immediately foreseeable future, the U.S. will continue to maintain USMC forces afloat, ready for rapid intervention from the sea. It may be possible to deliver logistics support from CONUS in the long-term (~25 years). In the interim we need forward intermediate bases because we don't have the technologies for high-speed, long-range ships or heavy-lift, long-range aircraft. The Task Force should explore the trade-offs among these options:

- The desirability and possibility, within the 25-year time scale, to have a significant set of military interventions carried out from bases within CONUS.
- The military advantage that we can achieve by the use of joint logistics for joint forces delivered by joint means.
- Tradeoffs that will have to be made among: airlift, "fast" sealift, and conventional sealift. The Task Force is to develop operational definitions of those terms and develop an appropriate balance among them. Fast sealift will need particular attention since it is a new technology not previously available or fully analyzed.

In exploring these issues, the Task Force should examine the broadest range of alternatives and be guided by the following questions:

- How will the Department of Defense manage the development of a future transport architecture that spans several of the Armed Services and multiple technology fields?
- Are there competitive advantages held by other nations that suggest a sharing of the burdens?
- Are there technologically-related handicaps?
- What are the mobility challenges in the quest of our potential adversaries for asymmetric advantage?

The Study will be co-sponsored by me as the Acting Under Secretary of Defense (Acquisition, Technology, and Logistics) and the Director, Defense Systems. GEN William Tuttle, USA (Ret.) will serve as the Task Force Chairman. Dr. Paris Genalis, Deputy Director, OUSD (AT&L) Office of Naval Warfare, will serve as the Executive Secretary and LTC Scott Dolgoff will serve as the Defense Science Board Secretariat representative.

The Task Force shall have access to the classified information needed to develop its assessment and recommendations.

The Task Force will operate in accordance with the provisions of P.L.92-463, the "Federal Advisory Committee Act," and DOD Directive 5105.4, the "DOD Federal Advisory Committee Management Program." It is anticipated that this Task Force will not need to go into any "particular matters" within the meaning of Section 208 of Title 18, U.S. Code, nor will it cause any members to be placed in the position of acting as a procurement official.

Michael W. Wynne
Acting

This page intentionally left blank.

APPENDIX II. TASK FORCE MEMBERSHIP

CHAIRMAN

GEN William Tuttle, USA (Ret)	Private Consultant

TASK FORCE MEMBERS

Dr. Alan Berman	Private Consultant
VADM Frank Donovan, USN (Ret)	Private Consultant
Mr. Alan Ellinthorpe	Private Consultant
RADM Millard Firebaugh, USN (Ret)	Electric Boat
GEN John Foss, USA (Ret)	Private Consultant
Dr. Theodore Gold	Private Consultant
Dr. Robert Hermann	Global Technology Partners, LLC
Hon. Paul Kaminski	Private Consultant
Hon. Arthur Money	Private Consultant
Dr. Williamson Murray	IDA
Gen Charles Robertson, USAF (Ret)	Boeing
Mr. Frank Sullivan	Frank Sullivan & Associates
Gen Larry Welch, USAF (Ret)	IDA
Mr. Dan Winegrad	Private Consultant
LTG Ken Wykle, USA (Ret)	National Defense Transportation Association

EXECUTIVE SECRETARY

Dr. Paris Genalis	NDU

DSB REPRESENTATIVE

LTC Scott Dolgoff, USA

GOVERNMENT ADVISORS

COL Stanley Bergan, USA	USCENTCOM
Col John Butcher, USAF	JS J4/MD

Mr. John Christian	OUSD (AT&L)DS/Naval Warfare
Ms. Kathleen Conley	PA&E
Ms. Darlene Costello	OUSD (AT&L) /Defense Systems/ Systems Acquisition / Naval Warfare
Mr. Eric Coutler	PA&E
Mr. Donald Frahler	Military Sealift Command (N 52)
COL Phil Gick, USA	USTRANSCOM
COL Pete Gitto, USA	USPACOM
Dr. Mark Greaves	DARPA
LtCol Stewart Holmes, USAF	AF/XPXS
Mr. Jonathan Kaskin	CNO 42
Mr. Timothy Kaufman	AF/XPXSCOL
Col Chris Krisinger, USAF	HQ AMC/A54
Dr. Spiro Lekoudis	ODUSD (AT&L)
Mr. Nick Linkowitz	Logistics Vision & Strategy Center, Installations & Logistics Department, HQs, USMC
Mr. J.A. MacStravic	OUSD (AT&L) Joint Force Operations
COL (P) Francis Mahon, USA	G-8
Mr. Geoff Main	ONR
Col Lou Olinto, USAF	AF/XPXS
Col George Pavlicin, USAF	JS J-3
LTC (P) Robert Petrillo, USA	Military Surface Deployment and Distribution Command
Mr. Doug Richardson	USSOCOM
Mr. C.F. Snyder	NSWC
Mr. Michael Williams	Military Surface Deployment and Distribution Command, Transportation Engineering Agency
Mr. Adam Yearwood	ODUSD (L&MR)
Ms. Christine Zarate	OSD Transportation Policy

STAFF

Dr. Evelyn Dahm	Strategic Analysis Inc.

APPENDIX III. BRIEFINGS RECEIVED

Ms. Kathleen Conley, PA&E	*Strategic Planning Guidance (SPG) and the Enhanced Planning Process*
COL Patrick Kelly, OUSD (Policy)	*National Defense Strategy*
Col Al Sweetser, J-8	*Department of Defense's Analytic Agenda; Operational Availability Studies*
COL John Brown, USA	*Advanced Mobility Concept Study*
Mr. Bob Stoss	*Standards of Conduct for the DSB*
MG Robert Dail, USTRANSCOM	*TRANSCOM Briefing*
BGen Schmidle, USMC	*Seabasing CONOPS (Marine Corps)*
Mr. Jack Taylor, OSD	*Advanced Mobility Research and Development efforts in response to the SPG*
COL Dave Perkins, Dept. of the Army	*Army Prepositioning Concepts*
CDR Mark Becker, OPNAV N703B	*Seabasing Joint Integrating Concept*
Captain William Schubert, Dept. of Transportation	*MARAD Perspective*
MG Bill Essex, Air Mobility Command/A5	*Transformational Air Mobility Concept, AMC-X*
Mr. Davd Markowitz, PA&E	*Operational Availability*
Ms. Diane Wright, OSD-AT&L	*Aerial Tankers Analysis of Alternatives*
VADM Gordon Holder, JS-J4	*JS J-4 Perspective*
Ms. Juanita Plyer, SDDC TEA	*Underlying Methodology and Rationale for the AMCS*
Mr. Irv Blickstein, RAND	*DSB Task Force on Aerial Refueling*
Mr. Alan Ellinthorpe	*Technology Implications of the Proposed Airlift and Sealift Platforms*
COL Peter Gitto, PACOM	*PACOM's Mobility Perspective*
COL Bill Andrews, J-8	*Joint Forcible Entry Operations Joint Integrating Concept*
Mr. John Frasier, IDA	*AMCS Assessment*
MG William Mortensen, CENTCOM J-4	*CENTCOM's Perspective on Mobility Issues in Light of Operation Iraqi Freedom*
BG David Fastabend, TRADOC	*Army Force Projection and Sustainment Concept*
BG Charles Holland, USAF	*AEF Support to COCOMs*
COL Ed Hatch, JFCOM J-4	*Joint Operations Concepts and the relationship to Mobility Requirements*

CDR Bob Ballenger, JCOA	*Mobility Lessons learned during Operational Iraqi Freedom*
MG Dunwoody, CASCOM	*Army In-Battlespace Mobility Requirements*
Col Tony Wood, USMC (Ret)	*Decision Support Tool*
Mr. Phil Hunt, DARPA	*Walrus*
LTC David Woodgerd, OSD	*LTA Technology*
Mr. Nick Linkowitz, USMC	*Joint Intermodal Container; Mobility Challenges Beyond Deployment – USMC Perspective*
Maj Bill Lacey, USMC	*USMC Use of C-130s*
LTC Ron Salyer, DPMO	*Exercise Unified Quest*
COL Rusty Zargan & Mr. David Crum, TRADOC	*Army Theater Support Vessel Capability Objectives (TSV)*
Mr. Mike Walsh, OSD (AT&L)	*Joint Vertical Aircraft Task Force/Joint Heavy Lift ICD*
Mr. Ryan Henry, OUSD	*Global Posture Review*
Mr. Ozolek, JFCOM	*Unified Quest/Sea Viking Exercise Scenarios*

APPENDIX IV. SEA STATE CONDITIONS[23]

SITE	SEA STATE	% TIME SEA STATE IS EXCEEDED				
		IN THESE MONTHS				IN A YEAR
		FEB	MAY	AUG	NOV	
A	3	32	31	28	44	32
	4	16	13	9	22	15
B	3	21	40	32	16	24
	4	12	12	11	3	8
C	3					44
	4					26
	5					14
	6					5

Table 1. Sea State Statistics at Three Locations along the Asian Crescent

In table 1:

A = 029.75^{0}N, 049.0^{0}E (The North end of the Arabian Gulf, about 40 nautical miles East of Kuwait)

B = 024.0^{0}N, 062.0^{0}E (About 50 nautical miles South of Pakistan's SW corner)

C = 039.5^{0}N, 128.0^{0}E (Off the East coast of North Korea)

As an aid to those not familiar with the sea state scale, table 2 contains the Beaufort descriptions of these wind conditions.

SEA STATE	WIND (KNOTS)	BEAUFORT'S DESCRIPTION OF THE VISIBLE EFFECTS	
		AT SEA	ON LAND
2	9-11	Large wavelets; crests begin to break; scattered whitecaps	Leaves and small twigs in constant motion; light flags extended
3	12-16	Small waves (1 ft to 4 ft); numerous whitecaps	Dust, leaves, and loose paper lift; small branches move
4	18-20	Moderate waves (4 ft to 8 ft), taking longer form; many whitecaps, some spray	Small trees in leaf begin to sway
5	21-25	Large waves (8 ft to 13 ft); whitecaps everywhere; more spray	Large tree branches move; wires whistle; umbrellas used with difficulty

Table 2. Beaufort Descriptions of the Visible Effects

23. Carl Douglas, John Kennan, and Jeffery Peters; "Sea-Based Logistics Replenishment Alternatives", CAN Report CAB D0006757.A2/Final, November 2002

APPENDIX V. TECHNICAL DESCRIPTIONS OF AIRCRAFT IN THE FIXED-WING INVENTORY[24]

I. C-17 AND C-17ER

The C-17, the newest airlift aircraft in the Air Force's inventory, is capable of rapid strategic delivery of troops and cargo to main operating bases or directly to forward bases in a deployment area. The aircraft can also perform theater airlift missions, when required.

The C-17 is approximately 174 feet long and has a 170-foot wingspan. Four fully reversible Pratt & Whitney F117-PW-100 engines power the aircraft. (The commercial version is currently on the Boeing 757.) Each engine is rated at a maximum takeoff thrust of 40,440 pounds. The thrust reversers direct the flow of air upward and forward to avoid ingestion of dust and debris.

Cargo is loaded onto the C-17 through a large aft door that accommodates military vehicles and palletized cargo. The C-17 can carry virtually all of the Army's air-transportable, outsized combat equipment. It is able to air-drop paratroopers and cargo. The maximum payload capacity is 170,900 pounds, and its maximum gross takeoff weight is 585,000 pounds. With a payload of 130,000 pounds and an initial cruise altitude of 28,000 feet, the C-17 has an unrefueled range of approximately 5,200 nautical miles. Its cruise speed is approximately 450 knots (0.77 Mach).

The design of this aircraft lets it operate on small, austere airfields: it can take off and land on runways as short as 3,000 feet and as narrow as 90 feet. Even on such narrow runways, the C-17 can turn around by using its backing capability to perform a three-point star turn.

24. Most of the material presented in this attachment has been taken from standard Air Force Web sites and is presented for the convenience of those readers who may not be fully familiar with the attributes of the aircraft under discussion

Range and Payload

Many factors influence general aircraft range and payload. The range and payload figures quoted here are based on a standard day, an airfield at sea level, no wind, and a dry runway. Fuel reserves include minimum landing fuel, an alternate airfield within 30 minutes of the destination airfield, and Category I fuel availability. The en route cruise rests on flying the optimum flight profile – characterized by a best initial altitude with 4,000-foot step climbs as the use of fuel reduces gross weight and no wind for en route cruise. The range and payload figures referred to are almost ideal figures.

The payload weight that a C-17/C-17ER can transport is a function of many factors, of which the most readily apparent is the distance to be covered. The total weight —structure, fuel, and payload – directly affects the range of the aircraft. Payload consists of passengers and equipment. Since the structural weight and the maximum takeoff weight are constants in the calculation, fuel and cargo represent the variables. Carrying more fuel allows greater distances to be flown, but with less cargo. Conversely, with more cargo, the aircraft will be able to carry less fuel and therefore will be able to fly less distance without aerial refueling.

Weights and Ranges

The C-17 and the C-17ER have unrefueled, zero-payload ranges of 4,600 nautical miles and 6,200 nautical miles respectively. Their aerial refueling capabilities provide them with unlimited range, but the operational realities are that, during contingency operations, strategic airlift aircraft must compete for aerial refueling with all other aircraft in the deployment flow. There is only a limited fleet of KC-135 and KC-10 tanker aircraft available at any one time.

The maximum operational takeoff weight (the weight of the empty aircraft, plus fuel, plus payload) is 585,000 pounds (assuming a 7,000-foot-long by 90-foot-wide runway) for both airplanes: the C-17ER weighs 2,500 pounds more than the C-17, and the maximum operational payloads differ by that same amount -- 164,900 pounds for the C-17ER, and 167,400 pounds for the C-17, each with a range of 2,250 nautical miles. The payload capacities diminish with range at

different rates; they cross over at about 3,250 nautical miles. That is, at distances greater than about 3,250 nautical miles the C-17ER can carry heavier payloads than the C-17. Carrying the C-17/C-17ER standard planning load of 90,000 pounds, the range of the C-17ER is 650 nautical miles greater (4,250 versus 3,600 nautical miles) than the range of the C-17.

The C-17 and C-17ER operating weights (the givens) are 280,000 pounds and 282,500 pounds, respectively. The maximum fuel loads for the C-17 and C-17ER are 181,000 pounds and 245,000 pounds, respectively. The maximum payloads for the C-17 and C-17ER are 167,400 pounds and 164,900 pounds, respectively. Adding the figures gives a C-17 total weight of 628,400 pounds and a C-17ER total weight of 692,400 pounds, far exceeding the maximum operational takeoff weight of 585,000 pounds for both aircraft. Operating crew must reduce either fuel or payload to stay within the maximum operational takeoff limit. Other factors, such as temperature, airfield elevation, density altitude, wind speed and direction, precipitation, runway slope, and the individual aircraft's history also influence how much each aircraft can carry and how far.

Normal Landings

With a runway length of 5,000 feet and a runway width of 90 feet, the C-17/C-17ER maximum landing weight is the same as the maximum takeoff weight of 585,000 pounds. A range of 3,200 nautical miles represents the worst-case critical leg (longest air leg) length for a strategic air deployment. The C-17 can fly a 130,000-pound payload 3,200 nautical miles onto this size runway on a standard day at sea level with no corrections for wind, rain, runway slope, and so forth. The C-17ER can carry a 127,500-pound payload under the same conditions. In these conditions, a C-17 can fly a 156,000-pound payload (153,500 pounds for the C-17ER) 2,500 nautical miles.

Landings on Semiprepared Runways

The Air Force refers to unpaved runways as semiprepared runways. The maximum landing weight for a semiprepared runway is 447,000 pounds, 138,000 pounds less than the maximum aircraft

landing weight of 585,000 pounds on a paved runway. This reduction in landing weight is a function of the runway structure, consisting of the subgrade, the base or subbase courses, and the surface course. The subgrade is the natural in-place soil upon which a pavement, base, or subbase course is constructed. The base or subbase courses are natural or processed materials placed on the subgrade. The surface course comprises natural or processed materials (including airfield mat surfacing) placed on the base course to form the final operating surface. All of these courses must be placed and compacted to meet airfield structural standards for the C-17 or C-17ER.

While the C-17 and the C-17ER can land on an airfield that is about the same size as that required for the C-130, they cannot land at their maximum unpaved landing weight on an unpaved runway structurally designed for the C-130's maximum landing weight. Prior to landing a maximum-weight C-17 or C-17ER on such a runway, an Air Force Special Tactics Team would need to analyze the condition of the landing surface and approve or disapprove its use. Since the C-17 and C-17ER maximum landing weight for semiprepared runways is almost three times the C-130's maximum landing weight of 155,000 pounds, a C-17 airfield's structural requirements are much greater than those of C-130-only airfields. The heavier the aircraft, the greater the load placed on the airfield structure during takeoff, landing, and taxiing. With an unpaved surface, the heavier load on the tires will tend to form ruts on runway surfaces. The heavier the aircraft, the deeper the ruts. The greater the number of aircraft passes, the greater the number of ruts.

Assault Landings

Landings on runways shorter than 5,000 feet will most likely require the use of "assault landing procedures" – a steeper approach angle, a firmer touchdown, and so forth. Assault landings require a runway length of at least 3,500 feet and a runway width of at least 90 feet. The assault landing maximum total landing weight for a C-17or C-17ER is 502,100 pounds on a paved runway. This is because an assault landing onto a short assault zone results in a firmer impact with the ground, which stresses the aircraft more than a normal landing. In the case of an unpaved runway, the maximum landing

weight is 447,000 pounds. Given the 502,100-pound maximum assault landing weight, and a C-17 or C-17ER weighing 280,000 or 282,500 pounds, the remaining 222,100 or 219,600 pounds are available for fuel and payload. With 16,000 pounds of planned landing fuel and 10,000 pounds of divert fuel (in case the aircraft needs to divert to another airfield to land) required, the C-17 and C-17ER can do an assault landing at full payload on a paved runway.

This is in stark contrast to the C-130, which cannot perform an assault landing at full payload. With the C-130, availability of fuel on the ground at forward airfields is a concern when transporting Army combat vehicles. The C-17 and C-17ER can carry sufficient fuel to deliver their maximum payload to a paved runway and still have enough fuel to take off and fly to another airfield to refuel. The only restriction is that the C-17ER cannot have fuel in its extended-range compartments. Although the extended-range tanks are not designed to withstand the loads imposed by assault landings, this condition does not really represent a restriction. The extended-range tanks are the last to be filled of all the tanks, but are the first to be used.

The C-17 and C-17ER can perform an assault landing at the semiprepared runway maximum landing-weight of 447,000 pounds.

Cargo Vehicles

Because of the C-17's large capacity (in both size and weight), the parameters of an individual cargo vehicle rarely come into play. The C-17 can transport the ground force's heaviest combat vehicle, the M-1 tank, at a maximum weight of 135,000 pounds. This is 5,000 pounds heavier than the operational weight limit of 130,000 pounds for loading across the ramp. However, a waiver was granted after analysis by the C-17 System Program Office (SPO) and the aircraft manufacturer showed that the load distribution of the M-1 did not detrimentally affect the ramp structure. This waiver is for the M-1 only.

Dimensional Limitations

The interior of the C-17 is so large that almost every item of ground force equipment can fit within the interior envelope. Loading

multiple vehicles can present an interesting challenge, but the C-17 was originally designed to transport two 5-ton vans side-by-side, so it has a great capability to transport multiple large vehicles.

The design limits for equipment transportable in the C-17 and C-17ER are as follows:

Height:	142 inches
Width:	196 inches (204 inches if the item to be loaded has a height less than 136 inches)
Length:	784 inches (cargo deck)
	232 inches (ramp)

These limits allow for six inches of safety clearance between the equipment and the aircraft ceiling and sidewalls.

There are certain special requirements in the load planning for multiple vehicles in the C-17. Access to the aft end of the cargo compartment has to be maintained, and the vehicles must not be so close to each other that they could make contact during turbulent flight conditions. There is no hard-and-fast minimum distance - it is up to the user, based on potential damage from in-flight turbulence. Nevertheless, Air Mobility Command recommends at least 6 inches, and of course there has to be enough space to restrain the vehicles with tie-downs.

Airdrop

Aircraft and parachute capabilities limit airdrop capabilities. Parachute and parafoil technology are discussed in the "overland logistics" section.

The C-17, along with the C-130, is capable of low-speed airdrop, a capability that supports several types of military operations: mass assault, tactical insertion, and resupply. This procedure is used when aircraft landing is impossible. In a mass assault operation, a large quantity of personnel, supplies, and equipment is air-dropped into the opposing forces' territory to establish a position. In a resupply operation, items such as rations, equipment, ammunition, water, fuel,

and medical supplies are air-dropped into an area held by friendly forces to replenish dwindling stocks.

The maximum dimensional limits of a rigged load (airdrop platform plus energy-dissipating material plus the item to be air-dropped plus parachutes) for the C-17 are 118 inches in height, 126 inches in width, and 384 inches in length. The height is further restricted forward of the rigged item's center of gravity to allow extraction under a malfunction condition (that is, if the extraction parachute fails to fully deploy).

The maximum height for vehicles with rubber tires and vehicles with suspension systems requiring C-17 airdrop is approximately 108 inches. The maximum height for vehicles without suspension systems and for all other equipment is approximately 102.5 inches.

The C-17's airdrop capability depends on the mode of delivery. The maximum weight that can be air-dropped from the C-17 using parachute extraction is 110,000 pounds. The maximum single item that can be air-dropped using parachute extraction is 60,000 pounds. The maximum rigging requirement is approximately 48,600 pounds. The airdrop hardware presently available can support a single-item maximum gross rigged weight of only 42,000 pounds. This is an air-drop hardware limitation and not an aircraft limitation. The maximum single-item weight for C-17 airdrop, given current 42,000-pound hardware limitations, is about 34,200 pounds, the same as for the C-130.

II. C-5B

The C-5 Galaxy is a heavy-cargo air transport designed to provide strategic airlift for deployment and sustainment of combat forces. The C-5 can carry unusually large and heavy cargo over intercontinental ranges. The plane can take off and land in relatively short distances and taxi on substandard surfaces during emergency operations.

Using the front and rear cargo openings, the Galaxy can load and off-load at the same time. Both nose and rear doors open the full width and height of the cargo compartment, allowing drive-through

loading and unloading of wheeled and tracked vehicles and faster, easier loading of bulky equipment. A "kneeling" landing gear system lowers the aircraft's cargo floor to truck-bed height. The entire cargo floor has a roller system for rapid handling of palletized equipment. It can load 36 fully loaded pallets in approximately 90 minutes.

The Galaxy's weight is distributed on its high-flotation landing gear, which has 28 wheels. The landing gear system can raise each set of wheels individually for simplified tire changes or brake maintenance. Four turbofan engines mounted on pylons under the wings power the C-5. The Galaxy has 12 integral wing tanks with a capacity of 51,150 gallons (322,500 pounds) of fuel. This fuel load permits the C-5 to transport a 204,904-pound payload 2,150 nautical miles, off-load, and then fly another 500 miles without refueling.

Features unique to the C-5 include the forward cargo door (visor) and ramp and the aft cargo door system and ramp. These features allow drive-on/drive-off loading and unloading as well as loading and unloading from either end of the cargo compartment. The C-5's kneeling capability also facilitates and expedites these operations by lowering the cargo compartment floor approximately 10 feet - to 3 feet off the ground. This position lowers cargo ramps for truck bed and ground loading and reduces ramp angles for loading and unloading vehicles. The C-5's floor does not have tread ways. The floor-bearing pressure rating is the same over the entire floor.

The troop compartment is on the aircraft's upper deck. It is self-contained, with a galley, two lavatories, and 73 available seats. Another 267 airline seats may be installed on the cargo compartment floor. These additional seats allow a maximum combined total of 329 troops, including aircrew. Except for emergencies or unusual circumstances, though, the C-5 does not carry troops in the lower-deck cargo compartment. The 73 seats on the upper deck are available for personnel and operators of the equipment being airlifted.

The Galaxy remains one of the world's largest aircraft. It is the only aircraft that can transport all of the Army's outsized combat equipment, including the 74-ton mobile scissors bridge, tanks, and

helicopters. It is capable of carrying two Abrams main battle tanks, an Abrams tank plus two Bradley armored fighting vehicles, 10 light armored vehicles, six Apache attack helicopters, or 36 standard pallets, type 463L. The C-5 has also carried special loads, such as large missiles, that would require extra time, manpower, and dollars to transport via ship, rail, or flatbed truck.

Maximum Peacetime Takeoff Weight:	769,000 pounds.
Maximum Wartime Takeoff Weight:	840,000 pounds.
Takeoff Distance Fully Loaded:	12,200 feet
Landing Distance Fully Loaded:	4,900 feet
Cargo Compartment Height:	13 feet, 6 inches
Cargo Compartment Width:	19 feet
Range empty:	5,165 nautical miles
Ceiling:	34,000 feet with a 605,000-pound load
Speed:	541 mph (Mach 0.72)

Table 1. C-5 Numerical Data

III. C-130E/H/J/J-30 HERCULES

The C-130 is a four-engine, high-wing, aft-cargo-door aircraft primarily used as a short-range (tactical or intratheater) transporter. There have been frequent upgrades since the first C-130A entered the inventory in 1956. The latest models, the C-130J (stubby) and C-130J-30 (stretch), have just recently entered service. The cargo compartment of the C-130J is the same size as that of the C-130E/H. The stretch version (C-130J-30) has the same cargo-compartment cross section (height and width), but its fuselage is 180 inches longer than that of previous models. One-hundred-inch and 80-inch fuselage plugs fore and aft of the wings furnish the added length. The J-30 can carry longer – but not much heavier -- cargo than other C-130 variants. The extra length accommodates two additional 463L pallets.

The cargo deck length suitable for 13,000-pound axle loads is still 345 inches long. The C-130J and C1-30J-30 incorporate state-of-the art technologies to reduce operating costs and provide some improvements in aircraft performance. The significant changes to the cargo compartment lie in a built-in winch and the ability to make the deck surface flat for rolling stock or nonpalletized loads without removing roller conveyors from the deck, but by using flip-over roller trays like those on the C-17.

The current C-130 inventory mostly comprises various configurations of the E and H models. The Air Force is working to modernize E and H configurations into a single standard configuration. The next generation that is on the drawing boards, the C-130 "AMP," will essentially have the same operating envelope as the C-130H3.

With the exception of some special mission aircraft, the USAF C-130 does not have an aerial refueling capability. The C-130J and C-130J-30 will come with internal piping for an aerial refueling system, but it would take extensive and costly modifications to enable this capability. At present, no plans exist to field a C-130 with an aerial refueling capability. The following table displays the USAF plan for the C-130 as of October 2004. Changes made since that time in the out-year budgets will probably cause the numbers to decline faster than shown in the table. The cutback in the C-130J program announced as this document was in process would further reduce the fleet size – unless there is a congressional override, as has often been the case in the past.

Model	2002	2008	2016	2020
C-130E [1]	209	112	33	33
C-130H [1]	286	282	282	282
C-130J	12	12	12	12
C-130J-30	5	51	138	138
Totals	512	457	465	465

Table 2. Current and Projected C-130 Inventory

[1] Some E and H model aircraft will be modernized and redesignated under the Avionics Modernization Program (C-130 AMP) over the next 15 years.

Both the Navy and the Marine Corps operate C-130 aircraft. The original combined Navy and Marine Corps C-130 inventory consisted of 20 C-130s, 79 KC-130s, 6 LC-130s, and 1 TC-130. Model years of these aircraft ranged from 1961 to 1998. Budgetary pressures and aircraft lifetimes are slowly diminishing this inventory. Many of these aircraft are configured for special missions. At present, the Marine Corps is scheduled to acquire 50 C-130Js.

Range and Payload

The amount of payload (passengers, cargo, and associated shoring) a C-130 can transport depends on many factors, including Air Force operational limitations, environmental and geographical conditions, the threat environment, and/or additional equipment added to an aircraft after acquisition. A combination of the aircraft's total weight (sum of basic aircraft, aircrew, onboard equipment, fuel, and cargo weights), airfield conditions (elevation above sea level, obstacles near the runway, and runway length and slope), climate (air temperature, density altitude, wind speed and direction, and precipitation), and the aircraft's ability to overcome gravity (newer C-130s have more powerful engines) determine range. Aircraft range is

also related to the amount of fuel available and variables that impact the pilot's ability to keep an aircraft aloft. Fuel consumption rates vary according to the altitude, temperature, and weight of the aircraft.

C-130E/H models comprise the majority of the C-130 fleet. The C-130E/H has a maximum ramp weight of 155,000 pounds for peacetime operations. Since it may not taxi at weights over 155,000 pounds, normal takeoff weight is 153,700 pounds. (The 1,300 decrease represents fuel used during engine start and taxi operations.) With minimal cargo, armored maximum range is 2,900 nautical miles (straight-line range with a full fuel load). The maximum payload for an armored aircraft is 42,000 pounds, but the heavy cargo load reduces the amount of fuel an aircraft can carry, so the distance the aircraft can fly with such a load is limited. For example, an unarmored aircraft can transport 42,000 pounds 260 nautical miles (straight-line range), but an armored C-130E/H can carry a 42,000-pound payload only 60 nautical miles (straight line).

When operating in hostile areas, where local forces can use weapons such as small arms, rocket-propelled grenades, and man-portable air defense systems against aircraft in flight, Air Mobility Command (AMC) requires that C-130s be equipped with armor kits. The armor protects the crew and key systems; it weighs 1,569 pounds (1,354 pounds at the flight station and liquid oxygen bottles and 215 pounds at the loadmaster station). This means that either the amount of payload available to the U.S. Army is 1,569 pounds less than on unarmored aircraft or that the aircrew must reduce its fuel load by 1,569 pounds, thus decreasing range. If the mission is to fly a 38,000-pound payload to a normal landing, an armor-equipped aircraft could fly approximately 860 nautical miles. If the mission is to fly 1,000 nautical miles, the payload would be approximately 36,500 pounds. Armor increases weight and affects the aircraft's center of gravity. This may result in the need to manipulate the cargo-fuel mix in order to ensure that the aircraft maintains its center of gravity for both takeoff and landing, which could affect maximum cargo allowed. Therefore, the best planners calculate load plans on an armored aircraft.

The table below shows the maximum ranges (balance of maximum fuel and cargo onboard) for an armored C-130H. These payloads and ranges reflect near-ideal conditions.

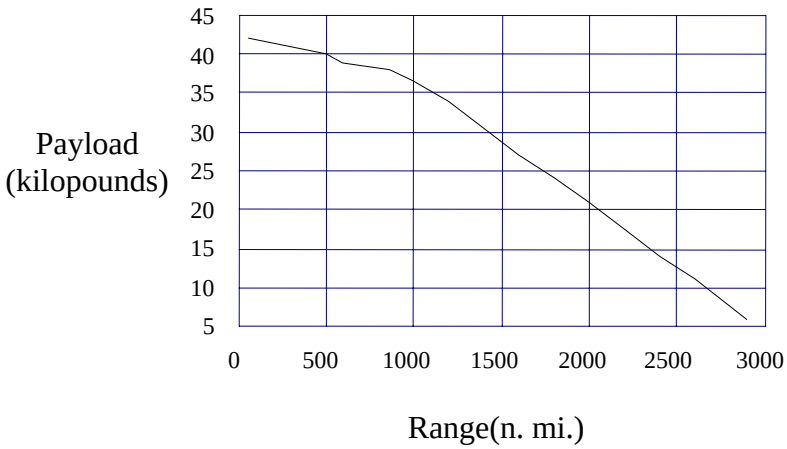

Figure 1. Armored C-130 Payload vs. Range

Wing-Relieving Fuel

The C-130's design requires that a certain amount of fuel be kept in the wing tanks during heavy-cargo missions to reduce stress on the wing attachment points. If the aircraft is carrying more than 36,500 pounds of cargo, the armored C-130E/H must land with 6,000 pounds of fuel in the wing tanks. The table below shows more such data points.

Cargo (kilopounds)	Wing-tank fuel (kilopounds)
36.5	6.0
38.0	8.9
40.0	19.4

Table 3. C-130 Cargo and Fuel Requirements

Thus, cargo weights above 36,500 pounds require a disproportionate increase in the wing-relieving fuel (approximately 3 additional pounds of fuel for each additional pound of cargo) and result in a subsequent decrease in range. This fuel must remain onboard until the cargo has been off-loaded, after landing or air-dropping. The aircraft can use the fuel for the return flight.

Reserve Fuel

Another key factor in determining range and payload is the fact that an aircraft must land with reserve fuel: it must arrive over the destination airfield with sufficient fuel given its situation and location. (It may need, for example, to fly to an alternate airport because of bad weather.) The C-130 requires approximately 4,500 pounds of reserve fuel to fly to an alternate airport 100 nautical flight miles away from a destination. Weight of this additional fuel reduces range or payload.

Normal Landings

For the C-130, the length and/or width of a runway, not runway surface (paved or dirt) determine if a pilot will fly a normal or assault landing. Gravel or coral runway surfaces require assault-landing procedures. As an example of landing capabilities, an unarmored C-130H can fly a 38,000-pound payload 1,000 nautical miles into a 5,000-foot-long, 80-foot-wide improved airfield on a standard day (implying a dry, flat, sea-level runway in calm winds with moderate temperature).

Assault Landings

Landing a C-130 that weighs over 130,000 pounds requires a runway at least 5,000 feet in length, and at least 80 feet in width. In fact, assuming no other factors prohibit landing on a runway of that length and width, a pilot could land a C-130 that weighs as much as 153,700 pounds. Assault-landing procedures permit a pilot to land a C-130 that weighs up to 130,000 pounds on a runway at least 3,000 feet long and 60 feet wide. Assault landings remain limited to aircraft weights of 130,000 pounds or less because of stresses on the nose gear assembly. An assault landing in an armored aircraft, the empty

weight of which is 88,000 pounds, only allows for a combined fuel and cargo weight of 42,000 pounds. The C-130E/H requires 7,000 pounds of fuel on arrival overhead at the destination airfield. This includes 1,000 pounds for approach, making the actual amount of fuel in the aircraft on landing 6,000 pounds. If flight or airfield conditions are less than ideal, then range-payload numbers will also be less than ideal.

The empty (unarmored) weights of the J and J-30 are 85,000 and 88,000 pounds, respectively. (Armor adds 1,500 to 2,100 pounds). As noted above, wing-relieving fuel (WRF) loads must be added when heavy payloads have to be transported. For the J and the J-30, WRF is necessary for cargo weights above 35,000 pounds and 37,000 pounds respectively. Maximum peacetime operational weights for the J and J-30 are 155,000 and 164,000 pounds, respectively. The zero-cargo range for both aircraft is approximately 2,600 nautical miles. The J has a maximum cargo-carrying capacity of 42,000 pounds, and the J-30 can carry 43,000 pounds.

IV. AIRCRAFT TRANSPORTABILITY CRITERIA

An issue that affects air transport is the natural tendency of equipment designers to try to get as much capability as possible into a single package. This often results in vehicle designs that may be too large or heavy to transport by air. The solution most often put forward by designers is to rely on modularity or disassembly to get their vehicle into aircraft. The major part of the vehicle would go into one aircraft, while the vehicle's crew and remaining equipment would go into a second aircraft. Once both aircraft unload, the vehicle's crew reassemble the vehicle. The tactical acceptability of this concept is scenario dependent. The need for an additional aircraft, however, does increase the number of missions required to get deploying forces on the ground.

As noted in the earlier section on the C-17, the Air Force utilizes the C-130, along with the C-141 and C-17, for low-velocity airdrops. The maximum dimensional limits for a rigged load (airdrop platform, energy-dissipating material, the item to be air-dropped, and parachutes) for the C-130 are 100 inches high and a platform 108

inches wide and 384 inches (32 feet) long. Some loads may have equipment that hangs over the end of the platform. The height is further restricted forward of the rigged item's center of gravity to allow extraction under a malfunction condition. The maximum height for vehicles with rubber tires and vehicles with suspension systems requiring C-130 airdrop is approximately 90 inches. The maximum height for vehicles without suspension systems and for all other equipment is approximately 84.5 inches.

APPENDIX VI. TECHNICAL DESCRIPTIONS- VTOLS AND STOVLS

Vertical lift has been the subject of many proposals. The key insights include:

- Quad tilt rotor
- Stowed rotor
- Fan-in-wing
- Canard wing rotor
- Compound helicopter vectored thrust-ducted
- Compound helicopter vectored thrust-advancing
- Compound helicopter vectored thrust-open
- Semibuoyant heavy-lift aircraft (HLA)

With the exception of the tilt-rotor V-22, these concepts are at early levels of technological readiness. Tilt-rotor aircraft capable of lifting 20- to 25–short-ton payloads do not yet exist, and their realization would require a significant extrapolation of V-22 technology. Quad tilt-rotor alternatives to the V-22 (facetiously called the V-44) have been considered and, although the technology is immature, designs capable of lifting 25 tons might be feasible. Among the significant unknowns are the aerodynamic performance of the postulated V-44 in a near-ground environment and its performance during the transition from horizontal to vertical flight. It is unlikely that such an aircraft could achieve an operational status in less than 20 to 25 years.

The development of compound aircraft, such as the AH-64 Cheyenne or Gyrocopters and Gyrodynes, might represent steps in the right direction. They could be somewhat faster than helicopters, as demonstrated by the Cheyenne compound helicopter. However, no Gyrocopter or Gyrodyne has yet achieved similar speeds, despite 75 years of development. Moreover, these speeds represent only an

incremental improvement over helicopter speeds. Furthermore, the rotor-borne to wing-borne transition is dangerous, because power must be cut from the one propulsion system preliminary to powering up the other. During that conversion, the aircraft is falling along a 1 in 4 glide path. Due to the weight and design of such an aircraft, autorotation will not be effective in retarding the fall in the event of failure to start the rotor. It is important to recall that no tip jet powered helicopters were ever put in service, despite several development programs.

The pursuit of advanced technologies will be necessary to meet the requirements of ground force mobility CONOPS. Efficiency during the 10-15 seconds of hover time required for VTOL is not the most important issue; cruise efficiency and speed in loading and off-loading cargo are most important. In order to resupply and reinforce highly mobile ground forces operating far inland, the development of improved technologies will be required for fixed-wing or tilt-wing/tilt-rotor, VTOL/STOVL transport aircraft. The possibilities include a stowed rotor aircraft or an aircraft with lift fans or thrust-augmenting ejectors in the wings.

I. STOWED ROTOR SYSTEM

A stowed rotor aircraft is similar in concept to the slowed rotor, but it would carry the concept to the ultimate step -- stopping and stowing the rotor in order to achieve significant improvements in speed. The rotor would be slowed, then stopped, and stowed in a compartment on top of the aircraft's fuselage, similar to the payload bay of the space shuttle. The National Aeronautics and Space Administration (NASA) Ames full-scale wind tunnels demonstrated stopping and folding a rotor more than 30 years ago. The folding mechanism would be similar to that developed for the V-22.

The two critical technologies are

- The heavy-lift rotor and transmission system
- Integration of the folding mechanism

II. LIFT FAN SYSTEMS

VTOL operation requires a thrust-to-weight ratio greater than that needed for cruise. Significant gains in the static thrust of turbofan engines can be obtained by increasing the bypass ratio of the engine for vertical takeoff and landing. The effective bypass ratio can be increased by using the energy in the cruise engine exhaust jet to power a lift fan installed in the wing of the aircraft. The system needs to have the lift fans in the wing, as the fuselage will hold cargo.

Either shaft power (as in the X-35B) or hot gas tip drive (as in the XV-5A) could drive the wing lift fans. The fans in both concepts would be large in diameter, with low fan-pressure ratios (FPR) of 1.08-1.20. Previous studies have indicated thrust augmentation (fan lift/SHP or fan lift/thrust) in the range of 2.2–2.8 pounds/SHP for the shaft-driven fan-in-wing and 2.0–2.8 lb/lb for the gas-driven fan-in-wing. The fans would be located in the plane of the center of gravity with pitch control from fore and aft jets.

Both concepts would have at least two independent engines (one for each side) with cross shafting/ducting for one-engine-out capability. Good design practice would call for more than two engines to lessen the impact of one-engine-out and to provide better thrust matching between VTOL and subsonic cruise/loiter. During cruise/loiter, the engines could be powered back or even shut down to match the power/thrust to the cruise/loiter drag.

Using augmentation in the range of 2.2-2.8 pounds/SHP for the shaft-driven concept gives a power requirement of 25,000-32,000 SHP per side. The critical technologies are:

- Flight-weight gearbox and clutch to absorb ~ 25,000–32,000 SHP (current limit is the gearbox for the JSF-35B at 15,000 SHP)
- Turbo shaft engines rated at ~ 10,000 SHP (current limits are the Rolls Royce T 406 and Tyne engines at approximately 6200 SHP)
- Louvers, covers, and structure for large-diameter wing fan

- Using augmentation in the range of 2.0-2.8 lb/lb for the gas-driven concept gives a static thrust requirement of 25,000–35,000 pounds. The critical technologies are:
- Louvers, covers, and structure for large-diameter wing fan
- In-flight inlet closure
- Tip-driven turbine seals

III. EJECTOR SYSTEMS

Significant increases in the static thrust of turbofan engines can also be obtained by diverting the engine exhaust jet through an ejector, which is a pneumatic device that uses entrainment by the engine exhaust jet to pump a larger mass of air drawn from the atmosphere. A simple ejector consists of a nozzle that directs a jet through a duct. The suction forces that the entrained flow develops on the inlet of the duct increase the thrust of the engine. In effect, the ejector functions like a ducted fan. Since ejectors can augment the engine thrust, the additional thrust necessary to give an aircraft VTOL capabilities could be developed from a smaller engine that provides more efficient cruise.

Mixing of the engine exhaust jet and the entrained air within the ejector duct reduces the velocity, temperature, and noise of lift jets. The low temperature and pressure footprint of this mixed flow would enable a craft to operate from ships other than aircraft carriers, and to land on unprepared, constrained, tactical landing zones ashore. The critical technologies are

1. Ejector design
2. Enhancement of turbulent mixing
3. Noise abatement

IV. A COMPOUND SYSTEM

The requirements to fly long distances with heavy payloads and take off and land vertically are inherently difficult to achieve. Long-

range aircraft must be large to carry necessary fuel, but it is difficult for large aircraft to hover. Because an aircraft's vertical thrust increases with its disk area (L^2), while its weight increases with its volume (L^3), it is difficult for large aircraft to achieve hover thrust-to-weight ratios greater than one. However, the actual requirement is not to take off and land a large aircraft vertically, but rather to deliver and recover a 40,000–50,000-pound payload vertically. Therefore, an alternative approach might be a compound aircraft system consisting of a carrier aircraft that transports one or more VTOL delivery aircraft. The basic approach might be to join the VTOL aircraft to the wing tips of a long-range tanker aircraft. The reduction of induced drag due to the increased wingspan of the compound aircraft system would mean that the drag of the system would be comparable to the drag of the tanker alone. These aircraft would detach from the tanker mid-mission to deliver their payloads and reattach for the return flight.

This concept would reduce the risk associated with developing the VTOL aircraft. The critical technologies are

1. The VTOL lift system
2. The software for automatic formation flight

APPENDIX VII. COMMAND AND CONTROL — A JOINT LOGISTICS COMMAND

The full spectrum of the deployment and distribution operation, including options and consequences of changes must be visible to the joint force commander. Managing these processes and anticipating and/or reacting to inevitable changes and challenges requires continuous situational knowledge. The need to ensure proper leadership and management of this set of processes suggests the time has come for a joint logistics command (JLC) at the COCOM component command level.

The current approach to logistics continues to be service-centric and inefficient. The deployment and sustainment of operating forces in execution of current measures associated with the global war on terrorism (GWOT) has clearly focused attention on the integration of strategic and operational deployment and distribution capabilities within the AOR. The ability to mobilize forces in CONUS, deploy them great distances directly into the AOR, and rapidly employ them in combat is becoming the norm, not the exception. The demand for logistics (sustainment) in support of the GWOT will continue to place a strain on DoD's limited air and surface transportation assets. Distribution systems and supply chain processes are also becoming more and more interconnected, both in the world economy as well as within the department. Deployment operations and distribution operations are also becoming more intertwined. They now operate over the same defense transportation system and use the same pool of assets.[25] A Joint Logistics Command would serve as the organization needed to fully synchronize the logistics efforts demanded by today's strategic environment.

The combatant commander possesses the command authority for forces engaged in combat. Title X and Section 164 of the United States Code (USC) vest this authority only in combatant commanders. It cannot be delegated or transferred. Under this authority, the combatant commander exercises his responsibility for logistics by

25. See earlier discussion on deployment process owner.

issuing directives to subordinate commanders to ensure the effective execution of approved operational plans, the conduct of logistical operations, and the prevention or elimination of unnecessary duplication of capability, facilities, and overlapping functions among the service component commands and standing Combined Joint Task Forces (JTF).

Directive authority for logistics, however, does not address the core of a major disconnect for the combatant commanders. They do not have a full-time organization to command and control deployment, distribution, and logistics missions for all assigned or attached forces under their operational or tactical control. It is usually not germane to compare a combatant command to a major world-class business enterprise, but in this case it may be appropriate. No major global corporation operates its distribution system and supply chains without centralized management of subordinate unit processes. Only by such centralization can it gain efficiency and, more importantly, effectiveness, in line with company vision, intent, and mission.

There are clear disconnects between the current ways of directing joint and combined logistics and tomorrow's need for U.S. joint and combined force commanders to provide responsive logistical support for joint and multinational operations. This problem manifests itself not only in the lack of a C2 structure but also in the lack of a formal organization for the identification and matching of support requirements with capabilities for interagency participants in a crisis.

Combatant commanders possess a staff (J1, J4, Surgeon, Comptroller, Political Advisor (POLAD), Civil Affairs, etc.) to advise them on the C2 aspects of joint support issues. They possess subordinate functional component commanders, e.g., joint (or combined) forces land, air, and maritime component commands and joint special operations task force to exercise delegated, operations-related C2 functions in order to free their own operations staff for coordination and other higher-level planning and operations functions. The absence of a similar subordinate JLC creates the following issues for the joint force commander and his staff:

- There is no comprehensive or central point of logistics control, either doctrinally or actually, for combatant commanders or for their theaters. While COCOMs retain responsibility for theater logistics, they do not have the necessary C2 capabilities to execute those responsibilities properly.
- Doctrinally, COCOMs have the authority to form command centers and operation planning teams in wartime. They develop and exercise their directive authority capabilities prior to wartime through multiple commands. Put another way, joint doctrine institutionalizes stovepipes in peacetime, and then places a synchronization requirement on the COCOM to fit the pieces together in time of crisis. In this case, as in most others, stovepipes prevent a smooth end-to end flow of forces and materiel.
- The current functional COCOM logistical staffs inevitably become consumed in the detailed management and tracking of support functions for operations in which they are currently involved at the expense of coordinating and planning for the support of follow-on phases of operations.
- The majority of COCOM staffs tend to be generalists with broad process-related expertise. The C2 functions require expertise in the details of each support function and service/national requirements, procedures, policies, and systems. The need for a specialist-rich and systems-rich structure tends to make combatant commanders' staff large and ponderous.
- Augmentation of COCOM staffs to perform detailed around-the-clock operations in times of crisis results in suboptimal working relationships. Training individuals to augment the staff in the heat of a crisis diverts existing staff personnel from their primary responsibilities.
- Service and national-centric support planning and execution creates gaps and overlaps and multiple commitments of capabilities in the joint operations area (JOA). Examples include:

- The promotion of unnecessary competition for scarce logistics assets.
- Inconsistently applied theater logistics policies create friction and exacerbate the negative effects of limited lift and infrastructure capacity.
- The significant competition for support resources in the theater can overtask theater infrastructure (e.g., ports, airfields, and road/rail capabilities) through commitment to simultaneous support of multiple services or nations without a full appreciation for the larger distribution network or supply-chain requirements.
- Services and nations compete for host nation resources and obtain them on a "first-come, first-served" basis rather than in compliance with operational priorities. At the same time, unnecessary support capability due to redundancies between services and nations is often introduced into the task organization. That state of affairs then increases the support footprint, financial costs, deployment time, and vulnerability to enemy attacks.

The department must develop joint doctrine that clearly establishes and defines a *joint logistics command* (JLC). Joint Publication 4-01.4 outlines three alternatives for the combatant commanders to organize their theater logistics support structure: (1) each individual service provides support; (2) a lead service is designated as the logistics provider; or (3) the combatant commander establishes a joint theater-logistics management element. Given the current GWOT mission, not to mention the evolution of joint war fighting since the passage of Goldwater-Nichols, the idea of the individual services providing their own logistics support is clearly obsolete. Moreover, "lessons learned" from OIF reflect the inefficiencies of having a lead service as the logistics provider. Reviewing the alternatives, this Mobility Task Force believes the best

alternative is to establish a joint theater-logistics organization with appropriate Title 10 authority. Such an approach will provide a means for combatant commanders to establish their own joint logistics commands.

A joint logistics command could be structured as follows. The joint logistics commander and his J-3 staff would have the task of executing the details of logistical support for the combatant commander. The joint logistics commander would possess the full directive authority of the combatant commander to synchronize and integrate all of the logistical components of war for the command (maintenance, health services, engineering, field services, transportation-deployment, mobility, and distribution). A three-star commander, equal in rank to the other COCOM functional component commanders, would command the JLC. A Deployment and Distribution Operations Center (DDOC) would serve as the logistics "heartbeat" for the command.

Since COCOMs do not have any permanently assigned forces, the periodic assignment of forces to the JLC, or the designated command-and-control (C2) relationships, e.g., OPCON or TACON, would rest on the specific combatant command mission. At the theater level (for example CENTCOM), where the Army is the predominant service component for land forces, the Army could redirect resources of the future theater sustainment command to the JLC as a building block for the logistics organization. A DLA element, assigned under the operational control of the COCOM's join logistics command, would manage the end-to-end distribution and supply chain operations. The USAF's associated wing commands, which have embedded logistical support/aerial port squadrons and mobility airlift assets, the Marine Force Service Support Ground (FSSG), and the Navy's fleet support command would also be candidates under some specific conditions as the core C2 element for a JLC.

The service component logistics staffs would continue to provide oversight and deliberate logistics planning for their tactical and operational missions and for management of their weapons systems and equipment, but the joint logistics commander would function as the logistician to bridge the seam between strategic and operational

logistics for common supplies and services such as fuel and intratheater transportation. Under some specified plans, he or she could become the tactical logistician for a COCOM joint task force or its components/CJOAs. A model using the current CENTCOM organization would be as depicted below.

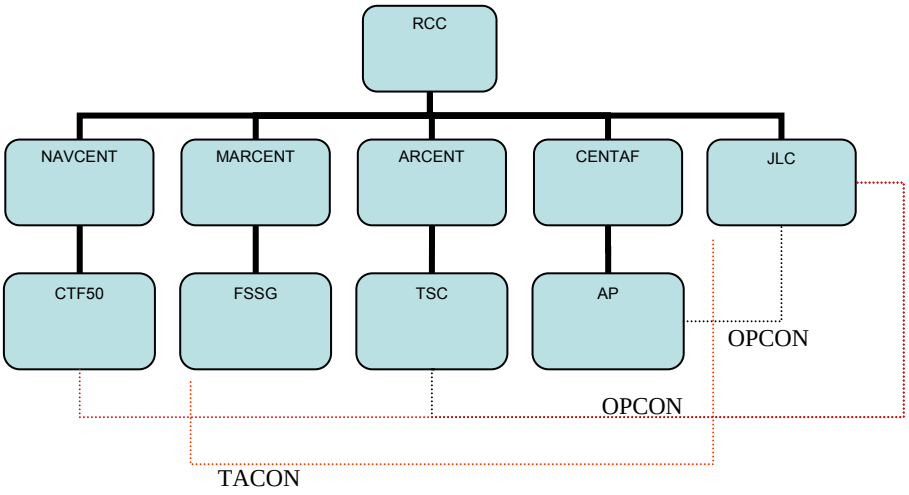

Figure 1. Theater Logistics Organizations

The structure of the JLC headquarters must contain a base-manning level with sufficient service, joint, and international representation to perform truly joint/combined oversight, planning, and execution. As outlined in the Joint Staff J4 work in the joint theater-logistics management (JTLM) implementation plan, the JLC must possess the capabilities to:

- "See/Sense:" the ability to plan, monitor, and assess in real time, allowing control of deployment/redeployment, distribution, employment, regeneration, and sustainment across the entire theater area of operations.
- "Respond:" the ability to prioritize, direct, synchronize, integrate, and coordinate common-user and cross-service logistics materiel and functions under the COCOM's control.

- "Collaborate:" the ability to collaborate fully with other COCOMs, service components, JTFs, interagency organizations, and coalition partners to achieve the ability to sense and respond.

The base-manning level should consist of approximately 200 active and guard or reserve service members. As noted above, the command staff would consist of the following grades: a three-star commander for the larger COCOM joint logistics commands, a one- or two-star deputy, a captain or colonel chief of staff, and minimal administrative staff. Smaller commands would require lower-rank leadership. The J1 would conduct internal HQ administration functions. The J3/DDOC would consist of 80–90 personnel, of whom approximately two thirds (64) could come from the COCOM DDOC Joint Manning Document (JMD). The J4 would conduct internal HQ sustainment functions. In addition, there would be an appropriately manned Civil-Military Operations (CMO)-J5/9, J7-engineer, and an IT-J6 staff to conduct theater-level operations, plans, and integration.

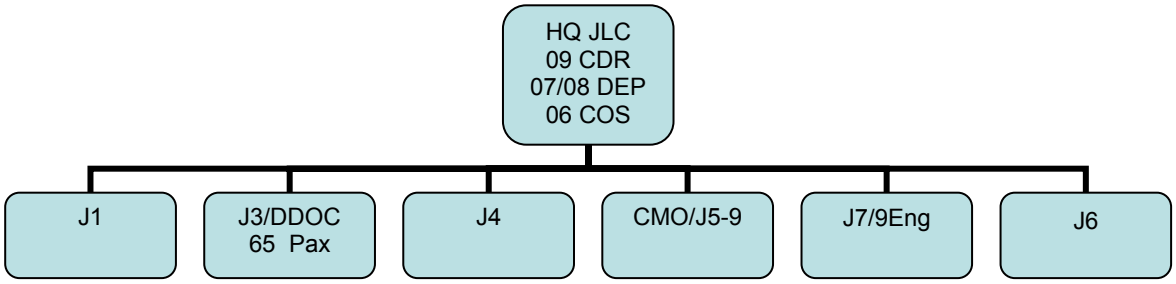

Figure 2. Joint Logistics Command Headquarters

Implementation of a JLC would provide the command-and-control organization necessary to make COCOM directive authority for logistics a reality. To be effective, logistics must be a function of command, not a function of staff.

APPENDIX VIII. ACRONYMS

AAHSS	Austere (Port)-Access High-Speed Ship
ABS	American Bureau of Shipping
ACTD	Advanced Concept Technology Demonstration
AF	Air Force
AMC	Air Mobility Command
AMCS	Advanced Mobility Concept Study
AMP	Avionics Modernization Program
AOR	Area of Operation
AP3	Army Power Projection Program
APOD	Airports of Debarkation
ASMP	Army Strategic Mobility Program
AT21	Agile Transportation 21
BCT	Brigade Combat Team
BnTF	Battalion Task Force
BWB	Blended Body Wing
C-17 PREP	C-17 Payload and Range Expansion Program
C2	Command and Control
CDDOC	CENTCOM Deployment and Distribution Center
CENTCOM	Central Command
CG	Center of Gravity
CHE	Container Handling Equipment
CJCS	Chairman, Joint Chiefs of Staff
COCOMS	Combatant Commanders
CONOPS	Concept of Operations
CONUS	Continental United States
CRAF	Civilian Reserve Air Fleet
CMO	Civil Military Operations
DARPA	Defense Advanced Research Projects Agency
DLA	Defense Logistics Agency
DoD	Department of Defense
DSB	Defense Science Board

EM	Electro-magnetic
EMTF	Expeditionary Mobility Task Forces
FCS	Future Combat System
FPR	Fan Pressure Ratios
FSS	Fast Sealift Ship
GATM	Global Air Traffic Management
GPS	Global Positioning System
GRT	Global Range Transport
GSA	General Services Administration
GWOT	Global War On Terrorism
HF	High Frequency
HLA	Heavy Lift Aircraft
HMMWV	High-Mobility Multipurpose Wheeled Vehicle
HSV	High-Speed Vessel
IED	Improvised Explosive Device
ISB	Intermediate Staging Base
ISO	International Standards Organization
ITV	In Transit Asset Visibility
JFCOM	Joint Forces Command
JHSV	Joint High-Speed Vessel
JLC	Joint Logistics Command
JMD	Joint Manning Document
JOPES	Joint Operation Planning and Execution System
LAV	Light Assault Vehicle
LC	Lesser Contingencies
LCS	Littoral Combat Ship
LCU	Landing Craft, Utility
L/D	Lift to Drag Ratio
LMSR	Large, medium speed roll-on/roll-off
MARAD	Maritime Administration
MCO	Major Combat Operations

MCS	Mobility Capability Study
MEF	Mobility Enhancement Funds
MEB	Marine Expeditionary Brigade
MHE	Material Handling Equipment
MSC	Military Sealift Command
MSP	Maritime Security Program
MPS	Maritime Prepositioning Ships
MUA	Military Utility Assessment
NAVAIR	Naval Air Systems Command
NDSF	National Defense Sealift Fund
NMI	Nautical Mile
NWC	Network Centric Warfare
OEF	Operation Enduring Freedom
OIF	Operation Iraqi Freedom
OIF1	Operation Iraqi Freedom 1
ONR	Office of Naval Research
OSD	Office of the Secretary of Defense
PACOM	Pacific Command
PEO	Program Executive Office
POD	Port of Discharge
POE	Port of Embarkation
POM	Program Objective Memorandum
POMCUS	Pre-positioned Materiel Configured to Unit Sets
PPO	Port Planning Orders
R&D	Research and Development
RCT	Regimental Combat Team
RDT&E	Research, Development, Test, and Evaluation
RERP	Reliability Enhancement and Reengineering Program
RFID	Radio Frequency Identification Device
RO/RO	Roll-On Roll-Off
RPG	Rocket-Propelled Grenade
RRF	Ready Reserve Force
RSOI	Reception, Staging, Onward movement, and Integration operations

SCN	Shipbuilding and Conversion
SDD	System Development and Demonstration
SDDC	Surface Deployment and Distribution Command
SDRES	Sea Deployment Readiness Exercises
SECDEF	Secretary of Defense
SES	Surface Effect Ship
SHP	Shaft House Power
SLEP	Ship-Life-Extension Program
SOF	Special Operations Forces
SPO	System Program Office
STOL	Short Takeoff and Landing
SSTOL	Super-Short Takeoff and Landing
STOVL	Short Takeoff and Vertical Landing
SWATH	Small Waterplane Area Twin Hull
TCAS	Traffic Alert and Collision Avoidance System
TOR	Terms of Reference
TRANSCOM	U.S. Transportation Command
TSV	Theater Support Vessel
TT&P	Tactics, Techniques, and Procedures
UA	Unit of Action
ULV	Unmanned Logistics Vehicle
U.S.	United States of America
USAF	United States Air Force
USMC	United States Marine Corps
VISA	Voluntary Intermodal Sealift Agreement
VTOL	Vertical Takeoff and Landing
WMD	Weapons of Mass Destruction
WRF	Wing-Relieving Fuel