ASSUMPTION BASED CAMPAIGN PLANNING

A
Monograph

by LTC(P) Alan M. Mosher, USA, LTC(P) Brian F. Waters, USA, and LTC(P) Robert C. Johnson, USA

School of Advanced Military Studies
United States Army Command and General Staff College
Fort Leavenworth, Kansas
AY 01-02

ABSTRACT

ASSUMPTION BASED CAMPAIGN PLANNING by LTC(P) Alan M. Mosher, USA, LTC(P) Brian F. Waters, USA, and LTC(P) Robert C. Johnson, USA, 50 pages.

After the 11 September 2001 surprise attack on the World Trade Center and the Pentagon by al Qaida terrorists, planners from all over the US Army were tasked to join an Army planning team to develop the Army's Strategic Campaign Plan (ASCP) in support of Operation Enduring Freedom. The Deputy Chief of Staff for Operations and Plans (DCSOPS) formed the team around officers from the office entitled DAMO-SS and other officers displaced from the Pentagon due to the damage caused by the terrorist attack. Three School of Advanced Military Studies (SAMS) Fellows based out of Fort Leavenworth, Kansas were part of this team.

The purpose of the ASCP was to permit the Army to quickly begin planning and to provide direction for the Army to meet its obligations under Title 10 of the U.S. Code. The Army needed to quickly transition from a peace time to a war time status and be prepared to rapidly respond to directions from the highest levels of the nation, the Joint Staff, and the warfighting CINCs. The ASCP in its final form established the basis for the rapid transition from peace to war.

This monograph discusses the challenges of planning at the strategic level of war, the techniques used to address those challenges, and the lessons learned experienced by the SAMS Fellows. This study covers the challenges the Army planning team faced and addresses: assembling the planning team; determining the campaign plan design; using assumption based planning and the Wedemeyer method; developing the plan using the elements of operational design; wargaming; and writing the actual ASCP. The paper also covers the lessons learned during the process of writing the ASCP from a planner's perspective. These lessons learned include insights on assumption based planning, the roles of a planner, and some tactics, techniques, and procedures (TTPs).

The monograph addresses conclusions on the development and writing of the ASCP. The final product was presented to the Chief of Staff of the Army 6 weeks after the attack on the World Trade Center and the Pentagon. The ASCP was the result of a collective effort from all over the Army. In some respects it broke new ground. It was written for a task that the Army had no model. The Army planners for Operation Enduring Freedom used the experiences of Albert Wedemeyer and his team of Army planners who had faced a similar strategic planning challenge 60 years prior. The planners were able to overcome a lack of strategic guidance to produce a campaign plan for the Army and provide the stimulus for facilitating the development of the National Strategy, the National Military Strategy, and the Strategy for Homeland Defense. There were tremendous lessons learned by all who participated in the ASCP experience. It is important to consider these lessons, as the Army will execute the ASCP over a period of years, if not decades.

This examination does not discuss any specifics of the ASCP or any classified material.

TABLE OF CONTENTS

Chapter One
Introduction……..…3
Mission Analysis and COA Development……..4
COA Analysis (Wargame)……..5
Writing the ASCP……..….6
Chapter Two
Assembling the Team……..…..…7
How Do We Write a Campaign Plan?……..……9
Assumption Based Planning and the Wedemeyer Method……12
Developing the Campaign Plan…….17
Arranging Operations……..……20
War Gaming……..……..23
Writing the Plan…….27
Chapter Three (Lessons Learned)
Assumption Based Planning.…….30
The Roles of a Strategic Level Planner……..…….34
Techniques and Procedures……42
Chapter Four
Conclusion……..……..……..48
Bibliography……..……..51

CHAPTER ONE

INTRODUCTION

After the 11 September 2001 surprise attack on the World Trade Center and the Pentagon by al Qaida terrorists, planners from all over the US Army were tasked to join an Army planning team to develop the Army's Strategic Campaign Plan (ASCP) in support of Operation Enduring Freedom. The Deputy Chief of Staff for Operations and Plans (DCSOPS) formed the team around officers from the office entitled DAMO-SS[1] and other officers displaced from the Pentagon due to the damage caused by the terrorist attack. Three School of Advanced Military Studies (SAMS) Fellows based out of Fort Leavenworth, Kansas were part of this team.

This paper will discuss the challenges of planning at the strategic level of war, the techniques used to address those challenges, and the lessons learned experienced by the SAMS Fellows. This study covers several areas. Chapter Two discusses how the planning team approached the problem of writing the ASCP. The approach addressed these specific topics: assembling the team; determining the campaign plan design; using assumption based planning and the Wedemeyer method; developing the plan using the elements of operational design; wargaming; and writing the actual ASCP. Chapter Three covers the lessons learned during the process of writing the ASCP from a planner's perspective. These lessons learned include insights on assumption based planning, the roles of a planner, and some tactics, techniques, and procedures. Chapter Four addresses conclusions on strategic planning. This examination will not discuss any specifics of the ASCP or any classified material.

The purpose of the ASCP was to permit the Army to quickly begin planning and to provide direction for the Army to meet its obligations under Title 10 of the U.S. Code. Army obligations under Title 10 are executed through the Secretary of the Army, and include recruiting, organizing,

[1] DAMO-SS is not an acronym, but an office symbol for the office responsible for developing strategy within the office of the Army Deputy Chief of Staff for Operations and Plans.

supplying, equipping, training, servicing, mobilizing, demobilizing, administering, maintaining, and construction.[2] The Army needed to quickly transition from a peace time to a war time status and be prepared to rapidly respond to directions from the highest levels of the nation[3], the Joint Staff, and the warfighting CINCs.

A chronology of events will help to paint a picture of the time constraints the ASCP planning team faced and how the process developed. Analysis of the events may be divided into three segments. The first series of events were the mission analysis (MA) and course of action (COA) development from 14 September to 28 September. The second period was the COA analysis (war game) from 29 September to 5 October. The third time frame from 6 October to 19 October included wargaming, refining the COA, and writing the ASCP.

Mission Analysis and COA Development

After the terrorist attacks of 11 September, the ASCP planning team started to assemble. The first two SAMS Fellows (a third Fellow followed later) received mission and travel instructions from the Command and General Staff College (CGSC) Dean of Academics at approximately 1700 hours on 14 September. The Fellows were told to catch a flight the next morning at 0300 AM. This is significant because the 14th was a Friday afternoon, there was limited installation support due to the time of day, and most airports across the country were in an extremely limited operation status. Additionally, the planners had a limited amount of time to assemble planning resources. On 15 September the Fellows were unable to get a civilian flight due to cancellations and were able to catch a German Airforce C-160 flight from Fort Leavenworth to Washington D.C. Upon arrival in Washington D.C. on the 15th, Army Deputy Chief of Staff for Operations (DCSOPs) representatives conducted a group and site orientation. On 16 September intelligence

[2] United States Government. Title 10, U.S. Code, Section 3013; ch. 383, Sec. 2(a), 64 Stat. 263. (Washington, June 28, 1950).

[3] The highest levels of the nation in terms of military policy typically infers the President, Secretary of Defense, and/or the National Security Council. Planners received guidance and direction through the Joint Staff from these national leaders. Typically they were not attributed to a specific individual, rather the "National Command Authority." In this paper, it will be referred to as the "National Leadership."

analysts gave the planning team a threat laydown. An initial MA also began on enemy and friendly centers of gravity (COG) and lines of operation (LO). On 17-18 September the entire team conducted MA. The MA was very challenging because of the lack of guidance from the National Leadership and the Joint Staff. Chapter Two discusses the process the team used to derive the higher level guidance through assumption based planning. On 19 September, the team developed a LO matrix that addressed tasks for Army Major Commands and Army Subordinate Component Commands along different proposed LOs.

20-22 September was COA development. 23-24 September the team developed what a war game turn would look like for the strategic war game that would later be conducted at the US Army War College, Carlisle Barracks, Pennsylvania. 25 September was spent developing the war game draft warning order (WARNO) and the war game book for the participants. The planners spent 26 September developing branch and sequel plans. On 27-28 September, the team conducted war game preparation and plan and orders refinement.

COA Analysis (Wargame)

29 September was a travel day to the US Army War College to set up and conduct rehearsals for the war game. On the 29th, a third SAMS Fellow arrived to help for the duration of the mission. On 30 September the team briefed a COA overview to the Senior Mentors (active and retired general officers). The war game took place from 31 September to 2 October. The war game was a daily series of COA briefings by phase to an assembly of the senior participants (referred to as the plenary) and the blue team, game turns by phase with action, reaction and counter action, and then discussions in the plenary about the outcomes. Several issues surfaced during the discussions to include phasing, end states versus conditions for transition, timing, critical decisions, and tasks. These issues and others will be further developed in this paper. During 3 and 4 October, the planners developed the initial campaign outline and structure. On 5 and 6 October the team traveled back to Washington D.C. and reorganized to analyze the war game data and prepare to write the ASCP.

Writing the ASCP

On 7 October the entire planning team reconvened and set the conditions for plan development. On 8 October there were some difficulties within the team on what direction the campaign plan should take and how to analyze and use the data from the war game. Part of the team wanted to write the ASCP and organize the operational construct and tasks as a traditional campaign of war from a war fighting point of view. The other part of the team wanted to write a corporate-style vision to facilitate the bureaucratic peace time POM (or budget) cycle. The team reached a consensus and on 9 October they began writing the first draft of the ASCP. On 9 October the team had to stop the effort to respond to another Operation Enduring Freedom tasking unrelated to the ASCP. On 10 October the writing of the ASCP with the briefing support package continued through 18 October. By 18 October the planning team produced fourteen drafts of the ASCP. The Assistant DCSOPS briefed the fourteenth edition to the Chief of Staff of the Army (CSA). The SAMS Fellows completed their mission on 19 October and returned to Fort Leavenworth.

The past few pages briefly highlighted major activities by framing them in time. The next three chapters will discuss these same activities in more detail.

CHAPTER TWO

Assembling the Team

In the hours and days following the attack on the Pentagon, much of the focus of the military was on rescue, recovery, and taking immediate action to defend against subsequent attacks. These actions fell under the realm of Crisis Response and Consequence Management. With the nation still in shock, the military's energies were rightly thrust into the task of supporting the rescue operations in New York and in the Pentagon, as well as taking immediate action for protecting critical locations across the world. It was not clear at that time if further attacks were imminent. The attack on the Pentagon ripped through the heart of the Army Staff. Even before the flames were extinguished, the CSA directed the Army Staff to begin planning how the Army will support military operations in the wake of the attacks. Clearly, a national response would be imminent. The CSA wanted to ensure that the Army was prepared to support the Unified Commanders, or Commanders in Chief (CINCs) in whatever role the nation required. The CSA established a planning team under the direction of the Assistant Deputy Chief of Staff for Operations and Plans (ADCSOP; DAMO-SS). With much of the Pentagon inaccessible in the wake of the attack, a suitable facility was needed for the team's operation. The ADCSOP, in coordination with the Commanding General of the Army Intelligence and Security Command (INSCOM), established planning operations at INSCOM's secure facility at Fort Belvoir, VA on 14 September. The team began assembling for the task throughout that day.

As is often the case in crisis action planning, there is no established planning staff dedicated to contingency support operations. The ADCOPS formed an ad-hoc team, with the core coming from DAMO-SS. Using field grade officers from DAMO-SS was a logical choice. Officers assigned to this section work on Army War Plans and Strategy. They are well versed in the planning process and are, by and large, top quality career officers. Without access to their Pentagon work areas, these officers were able to provide their undivided attention to the effort, as

routine office requirements were not a distracter. The team initially drew some expertise from other areas of the Army Staff and INSCOM. Two SAMS Fellows joined the team on 14 Sep 01 and a third joined later. At this point, the team comprised some 40 officers and Department of Defense Civilians, all working together for the first time. During the course of the next 6 weeks, experts from throughout the Department of Defense and the Army would periodically augment the team for specific planning tasks.

The facility at INSCOM was ideally suited for the project. It was located on a secure compound and was cleared for classified work throughout the majority of the building. Access to classified networks was already established, and sufficient secure voice communication devices were made immediately available. The facility had a large conference room that was ideal for group meetings and had secure video teleconferencing equipment in place. Additional small conference rooms made break out planning in smaller groups possible. Throughout the entire effort, the men and women of INSCOM were gracious hosts, as their conference rooms were taken over by the Army Planning Team and their schedules were inconveniently disrupted.

The team began with a somewhat nebulous charter. They were charged with developing a campaign plan to program how the Army should support the U.S. military response to the September 11th attacks. Implicit was that the Army would not unilaterally conduct combat operations. Rather, the Army would provide support in the way of forces and logistics to the CINCs and their operational plans. That much was clear. Unspecified at the time was exactly who the Army would support, what the mission was, and what was required of the Army. Further, while military action was clearly expected, with the exception of actions in support of Crisis Response and Consequence Management, no order from the National Leadership had been issued. Concerns that Army Staff planning was far behind the Joint Planning and Execution Community (JPEC) at that point later proved to be unfounded. In fact, the Army Staff was ahead

of the JPEC in campaign planning, and would later, in some instances, be the driving force behind much of the national strategy.[4]

How Do We Write a Campaign Plan?

United States military doctrine for campaign planning begins with Joint Publication 5-0, Doctrine for Planning Joint Operations. It describes a campaign as a series of "operations that arrange tactical, operational, and strategic actions within a given time and space."[5] Campaigns portray the manner that several operations are planned, coordinated and synchronized to ensure maximum effective results. A campaign plan, by sheer scope, tends to be quite complex. The level of detail included in the planning relates to the available time for planning. Joint Publication 5-0 describes two forms of planning for military operations: deliberate and crisis action planning. It was apparent to the team that the campaign they were to plan transcended both deliberate and crisis action planning. A publication in development, Joint Publication 5-00.1, Joint Doctrine for Campaign Planning, was obtained and reviewed by the team on the night of 15 September. While this publication was neither approved nor authoritative, it was deemed to have exceptional value to the Army Planning Team. This became the unofficial guide for the team.

The team first considered the fundamentals of campaign plans as described in Joint Publication 5-00.1:

- Provide broad strategic concepts of operations and sustainment of achieving multinational, national, and theater-strategic objectives.

---

[4] Anecdotal remarks by members of the staff indicated that in the first days following 11 September there was a perception among the senior leaders of the Army that the Joint Staff and the other services had already begun strategic planning to support a national response. Concern was expressed that in order to provide optimum support to the response, the Army must not fall behind the JPEC in the total planning effort. Discussions with joint and service action officers later revealed that the entire JPEC was in a similar position as they, too, were executing consequence management actions during that period.

[5] Joint Publication 5-0. Doctrine for Planning Joint Operations. 13 April 1995, pg 56.

- Provide an orderly schedule of decisions.
- Achieve unity of effort with air, land, sea, space, and special operations forces, in conjunction with interagency, multinational, nongovernment, private voluntary, or United Nations forces, as required.
- Incorporate the combatant commander's strategic intent and operational focus.
- Identify any forces or capabilities that the enemy has in the area.
- Identify the enemy strategic and operational centers of gravity and provide guidance to subordinates for defeating them.
- Identify the friendly strategic and operational centers of gravity and provide guidance to subordinates for protecting them.
- If required, sequence a series of related major joint operations conducted simultaneously throughout the area of responsibility or joint operations area.
- Establish the organization of subordinate forces and designate command relationships.
- Serve as the basis for subordinate planning and clearly define what constitutes success, including termination objectives and potential post hostilities activities.
- Provide strategic direction, operational focus, and major tasks, objectives, and concepts to subordinates.
- Provide direction for the employment of nuclear weapons as required and authorized by the National Command Authority.[6]

These fundamentals had varying degrees of applicability for designing a service specific campaign plan. For example, the plan served as a base document that provided strategic direction to Army subordinate commands and it provided a planning base for the entire Army. It did not provide combatant commander guidance or intent. However, they collectively served as a basis for developing the campaign and were viewed as axioms that would be easily recognized throughout the JPEC.

Deliberate campaign planning is a five-step process. It prepares the military for possible contingencies based on the best available information. Deliberate plans are continually in the

[6] Joint Publication 5-00.1. Joint Doctrine for Campaign Planning. Final Coordination, 16 April 2001, pg I-3.

development and refinement process. They are designed to "sit on the shelf" until needed. The five steps are Initiation, Concept Development, Plan Development, Plan Review, and Supporting Plans.[7] While some of the processes found in Concept Development and Plan Development would have applicability to the Army Planning Team's endeavor, the time available for developing this campaign plan was clearly in the domain of Crisis Action Planning (CAP).

Crisis Action Planning, as defined in JP 5-00.1, is used by the JPEC "to plan for and execute deployment and employment of US military forces in time-sensitive situations."[8] It allows planning to be conducted in a compressed time frame, completing some steps sequentially or in parallel. There are six phases in CAP: Situation Development, Crisis Assessment, Course of Action Development, Course of Action Selection, Execution Planning, and Execution. Given that the nation was already in the midst of a crisis, CAP was the obvious choice to develop the campaign. Even with the streamlined process of CAP, modifications were necessary to rapidly and effectively design the Army Strategic Campaign Plan, or as it came to be known, the ASCP.

The first variance came in mission analysis during course of action selection. The Army's course of action would be queued on the course of action selected by the CINC's operation. The CINC's course of action was the decisive variable that all Army support would hinge upon. While the Army Planning Team was conducting mission analysis little was known about the intentions of the combatant commanders. Tight classification guidance limited the ability of action officers to consult other commands to compare efforts. The team was able to deduce a set of scenarios involving the heaviest commitment of Army forces to meet enemy threats that were known to be in the area of operation. This "heavy scenario" was thought to have the greatest drain on Army resources, as well as the entire military and national industrial base. In consideration, the decision was made early in the mission analysis process that the course of action to be considered would involve the most demanding possible scenarios for the Army.

---

[7] Ibid, pg III-5.
[8] Ibid, pg IV-2.

The second departure from CAP and deliberate planning procedures involved the strategic assessment. Strategic guidance on how the nation should prosecute this campaign was informal at best, and more often absent. Very early in the process, planners asked: "What is it that we are supporting with this campaign plan?" While it was evident that action by the United States would be forthcoming, and that the military would have a major role, nothing could be planned without an edict from the National Leadership. The entire campaign would revolve around the strategy and direction as given by the National Leadership, specifically the President. The planning team found themselves in a situation similar to that of Major Albert Wedemeyer, some 60 years earlier.

Assumption Based Planning and the Wedemeyer Method

In 1941, Major Albert Wedemeyer was an action officer assigned to the War Plans Division on the Army Staff. Since the end of World War I, military planners were keenly aware that conflict with Japan or Germany was a distinct possibility. A series of war plans were developed over the years that produced an evolving broad military strategy. With the probability of the United States becoming involved in war looming even greater in May 1941, Army Chief of Staff General George C. Marshall directed Wedemeyer to develop a campaign plan to estimate Army requirements to fight a global war.[9] Wedemeyer's plan, *The Victory Program*, was considered the first and most comprehensive statement on Army views on strategy.[10] He led a team effort that succeeded without definitive guidance, and in his words, worked "with only the stars to guide us since no national aims or strategic objectives were given us."[11] Wedemeyer's

[9] Mark Skinner Watson, *Chief of Staff: Prewar Plans and Preparations*, The United States Army in World War II (Washington: Department of the Army Historical Division, 1950), 337.
[10] Ibid, 354.
[11] Albert C. Wedemeyer, *Wedemeyer Reports!* (New York: Henry Holt & Company, 1958), 17.

success was indeed remarkable. The Army Planning Team drew upon the lessons of Wedemeyer and applied them to the similar task they were facing.

Albert Wedemeyer's success was not accidental. His background, influences, and methods were all relevant and applicable in 2001. In his 1958 autobiography, Wedemeyer attributes much of his career success to character. He said "character is fate"[12] as he wrote of the influences in his life. He grew up in Omaha, NE, his father of German descent and his mother's family from Ireland. He graduated from the U.S. Military Academy and said that West Point had a lasting effect, even as he remained a lieutenant for 17 years. He indicated two assignments in his career were of particular importance in preparing him to develop the *Victory Program*: attendance at the Army Command and General Staff College (CGSC) at Fort Leavenworth, KS and the German *Kriegsakedemie* in Berlin.[13]

When Wedemeyer attended Leavenworth in 1934-36, CGSC was a two-year program. Students learned tactics and techniques for units up to the size of a reinforced division in the first year. Wedemeyer states he worked hard in school as he knew that academic standing was considered for future assignments. He enjoyed history and wrote his thesis on the World War I Battle of Belfort Gap. Second year students studied the employment of large unit formations, such as corps and armies, as well as the role of sea and air power as an instrument of national power. During this time he began to understand the intricacies of strategy, logistics and deployment. It was during the second year that Wedemeyer learned that he was being considered for an assignment to the *Kriegsakademie*, the German War College.[14]

Major Wedemeyer attended the *Kriegsakademie* in 1936-38. While in Berlin, he transitioned from studying operational art to strategy. Wedemeyer believed that his assignment to the Army War Plans Division was a result of his qualification as a graduate of the *Kriegsakedemie*. He came away from Berlin with a high regard for the German military

---

[12] Ibid, 44.
[13] Ibid.

education system. Wedemeyer said in his autobiography that the "German pedagogy and curriculum were superior to our own", and that the instruction at Leavenworth relied heavily on theory with less qualified instructors.[15] Second year *Kriegsakademie* students learned grand strategy, and studied the employment of power at the national level. Upon graduation, he prepared a 100-page report comparing the curriculum of CGSC and the *Kriegsakademie*. His report was presented to the Army Staff and went largely unnoticed, except by General George C. Marshall.[16] Three years later he was working in the War Plans Division.

As Wedemeyer began working the Victory Program he first considered the end state. "What type of conditions do we wish to create?"[17] he asked. The answer was not as intuitive as he thought it would be. The Chief of the Army War Plans Division, Brigadier General Leonard Gerow saw the challenge ahead of Wedemeyer. He later said that the plan was based on "more or less nebulous national policy."[18] The program was to be neither a strategic nor a tactical plan. Rather, it was to establish the framework for the Army during a period of war. In order to accomplish this, he worked with the Army staff to develop a broad picture of the task at hand, particularly in relation to the enemy capability. He worked with the Intelligence staff (G-2) to estimate total Axis military capabilities and then determined what would be required to defeat them. He developed a general scheme of maneuver to counter the enemy, and made broad assumptions to determine the level of support required to field this Army.

Wedemeyer believed he had a broad charter from the National Leadership. A directive issued by President Roosevelt to the Secretaries of War and the Navy in July 1941 gave, what he believed to be, his authority to draw resources from the Army staff to complete his plan.

"I wish that you, or appropriate representatives designated by you, would join with the Secretary of the Navy (or War) and his representatives in exploring at once the overall production

---

[14] Ibid, 48.
[15] Ibid, 50.
[16] Ibid, 62-63.
[17] Ibid, 63.

requirements required to defeat our potential enemies. I realize this report involves the making of considerable assumptions as to our probable friends and enemies and to the conceivable theaters of operation which will be required."[19]

Wedemeyer used the Rainbow 5 Plan as a point of departure for his Victory Program. Rainbow 5 was a plan to protect the Monroe Doctrine, the United States, its possessions, and to secure sea trade. It planned to project U.S. forces to the Eastern Atlantic, Europe, and Africa to decisively defeat Germany, Italy, or both. This operation would be accomplished in concert with Great Britain and France.[20] Rainbow 5 included several assumptions. Among them:

- Allies would fight Germany, Italy, Romania, Hungary and Bulgaria <u>or</u> Germany, Italy, Japan, Romania, Hungary, Bulgaria and Thailand.
- The plan would be in line with established agreements between the U.S. and Great Britain.
- Japan and Thailand could not be discounted as potential adversaries.
- Some logistical support could be obtained in the Far East.
- Latin American republics would generally remain non-belligerent.[21]

Wedemeyer then proceeded to make a number of assumptions in the Victory Program.

- The Monroe Doctrine would remain a vital national interest. We would resist any Axis penetration into the Western Hemisphere.
- Extensive U.S. aid would be given to Great Britain.
- We would provide aid to other Axis opponents as feasible.
- In the Far East, our policy would be to deter Japanese aggression and avoid military commitment at this time.
- Maintain freedom of the seas.

---

[18] Ibid, 72.
[19] President Franklin D. Roosevelt, in directive to the Secretaries of Navy and War on 9 July 1941, quoted in Watson, pp 338-339.
[20] Maurice Matloff and Edwin M. Snell, *Strategic Planning for Coalition Warfare*, The United States Army in World War II (Washington: Department of the Army Historical Division, 1953), 9.
[21] Ibid, 43.

- Europe would be the principal theater of war.
- Defeat of our political enemies (Italy and Japan) depends on the defeat of Germany.
- Earliest date for mobilization would be 1 July 1943.[22]

The military plan would be a product of the national strategy. A logical starting point would be the National Security Strategy and the National Military Strategy. Neither strategy was in existence in 1941. Wedemeyer then set out on a logical path of deduction to arrive at a basis for the Victory Plan. According to Charles E. Kirkpatrick *in An Unknown Future and a Doubtful Present: Writing the Victory Plan of 1941*, Wedemeyer established a set of questions to deduce a national strategy. They were:

- What is the national objective of the United States?
- What military strategy will be developed to accomplish this?
- What are the military force requirements to execute the strategy?
- How will the military force be constituted, equipped and trained?[23]

Albert Wedemeyer's assumption based planning proved to be quite sound. While he lacked clear national guidance, he was able to deduce defensible assumptions and direction. His methods led to an estimate that the Army would grow to 8.79 million men. Wartime records show a peak of 8.29 million men in 1945.[24] His success in 1941 provided the impetus for the Army planning team to use assumption based planning to develop the Army Strategic Campaign Plan in 2001.

---

[22] Ibid, 60.
[23] Charles C. Kirkpatrick, *An Unknown Future and a Doubtful Present: Writing the Victory Plan of 1941*. (Washington: United States Army Center for Military History, 1992), 60-61.
[24] Ibid.

Developing the Campaign Plan

Mission analysis for the Army Planning Team began on 16 Sep 01. The team received a detailed threat laydown the previous day. With a broad concept of the enemy situation, the team looked at methods to defeat them. At this point it was crucial that planners understand the appropriate level of focus. This was not an effort to build a plan that a CINC could execute as it prosecuted the war against terrorist organizations. Further, there was no intention to develop a parallel or improved theater campaign. The charter, as conveyed from the Army Staff, was to develop a campaign plan with a Title 10 focus. In general, Title 10 of the U.S. Code is the Army's statutory authority to maintain an active force, and provides responsibilities and limitations to do so. Title 10 covers 12 functions, from recruiting and organizing, to training, servicing and maintaining the force. The focus would have a similar frame to the *Victory Program.*

As the team's focus was established they set forth to conduct mission analysis in the standard military decision making process format. This process begins by considering facts, making assumptions, and analyzing the higher headquarters mission and intent. Facts and assumptions were gathered by poring over the daily news, reviewing news conferences and press releases, and lifting key portions of public statements from the President, Secretary of State, and Secretary of Defense. While this did not provide a definitive intent, it gave a good sense of direction that the national leaders were considering. The specified tasks were few. The tasks dealt with Crisis Response and Consequence Management (CR/CM) and support to the Director of Military Support. Implied tasks were gleaned from the public statements and derived assumptions.

At this stage discussion began concerning the enemy center of gravity. Identification of the enemy center of gravity is central to the development of a campaign plan. Consensus on the

center of gravity was not immediately reached, as the team divided into two camps of thought. The first camp felt that the center of gravity was Muslim extremism, and that if one was to attack and defeat this extremism the war would eventually be won. The second camp included the SAMS Fellows. They saw the center of gravity as the will and capability of the terrorist groups. The two concepts were similar, yet had important distinctions. Proponents for identifying extremism saw this as the true root of the enemy. They felt attacking the will and capability would not result in the ultimate defeat of terrorism. The SAMS Fellows argued that it was impractical to target an ideal, and that eliminating an adversary's will to attack and his capability to conduct attacks would be the most direct route to victory. They felt this was applicable to any terrorist group. It was agreed that an immediate decision on the center of gravity was not required, and that the mission analysis must proceed. In the final draft of the campaign plan, a compromise was made, blending the concepts into the will and capability of extremist groups.

The planning team identified three lines of operation to form the basis of mission analysis. The first was the National Strategic Campaign Plan (NSCP). In the absence of formal strategic guidance, it was necessary to dedicate energy to develop some possible strategic aims, in the same manner that Wedemeyer formed the *Victory Program.* As a derivative of the NSCP, a Military Strategic Campaign Plan (MSCP) would provide the direction for the global military effort in the war. This level guidance would be intended for CINCs, and would in ordinary circumstances originate from the Joint Staff as a product of Deliberate or Crisis Action Planning. There was no plan available from the Joint Staff, and none was in development at that date, as their focus was on the immediate issues of homeland defense and CR/CM. The second line of operation would then be the MSCP. The final line of operation was CR/CM. This line was considered essential because it was an enabler to defeat the enemy center of gravity. It required immediate resources that would be dedicated to antiterrorism (and perhaps counter terrorism) for an indefinite period. Synchronization of this line with any direct action or military campaign would be required. The ADCSOP determined that each line of operation required separate

mission analysis and formed three groups within the Army Planning Team. A senior Colonel from DAMO-SS led the NSCP group, and SAMS Fellows led the MSCP and CR/CM groups. The result of these three separate planning efforts was the development of draft strategic aims for all three lines of operation. This bottom up strategic guidance was useful as the campaign plan was developed. The guidance was presented in various forms to the Joint Staff and eventually formed the basis for the NSCP.

At the tactical level the Battlefield Operating Systems (BOS) are routinely used as a framework to analyze an operation or course of action. For this campaign, the BOS was not applicable. Instead, the team used the Strategic National Uniform Joint Task List (UJTL) as a framework. These tasks describe U.S. military capability in broad terms.[25] These tasks are:

- Conduct Strategic Deployment and Redeployment
- Develop National Strategic Intelligence and Reconnaissance
- Employ Forces
- Provide Sustainment
- Provide Strategic Direction and Integration
- Conduct Mobilization
- Conduct Force Development
- Foster Multi-National and Interagency Relations

A synchronization matrix was prepared for each line of operation to ensure that it addressed each UJTL. The matrix was later used when considering tasks to subordinate units.

At this point the planning team had good focus. Imperative throughout the process however, was the need to constantly "stay between the lines." Given the wide background of the members of the planning team, it was natural for planners to drift into the operational or tactical level of thinking. While this had value to ensure the team remained in touch with the art of the

[25] Joint Publication 5-00.1, A-1.

possible, it would prove to be detrimental and extremely time consuming if the planning effort were to linger at those levels. Lead planners had to keep teams focused on the strategic level, keeping in mind the Army's role under Title 10, with emphasis on key tasks the Army would be required to perform in support of the MSCP. This required more effort than expected, but the emphasis was fruitful in keeping the campaign planning on track.

As the mission analysis process neared completion, the three groups reconvened to synchronize their efforts. The next logical step in the MDMP would be Course of Action (COA) development and selection. Taking a lesson from Wedemeyer, the team worked to develop a broad scheme of maneuver that the campaign could use to program all support with Title 10. In the course of one day, two courses of action were developed using a heavy and light scenario. This proved beneficial to the team while considering potential orders of magnitude of support required in various regions. As discussed earlier, it was decided to fully develop a single course of action using the most difficult scenario. This would be the one course of action that would be refined and war-gamed.

Arranging Operations

Prior to war-gaming, the course of action had to be refined and phased. Arranging a campaign by phase is not absolutely mandated by doctrine, but it is the most effective manner to arrange operations by time, space, and purpose. Joint Publication 3-0 describes phasing as a tool commonly used by commanders to organize operations. It assists the commander in framing intent and assigning tasks to subordinate commanders.[26] Phasing was deemed important as it offered the best method to plan and synchronize events over time.

[26] Joint Publication 3-0. Doctrine for Joint Operations. 10 September 2001, III-18.

Five phases were planned. Each phase initially had an end state, marking the transition to the following phase. As the plan matured, the planning team realized that there was likely to be significant overlapping of portions of some phases. Actions in Phase I, for example, may

Overlapping Phases

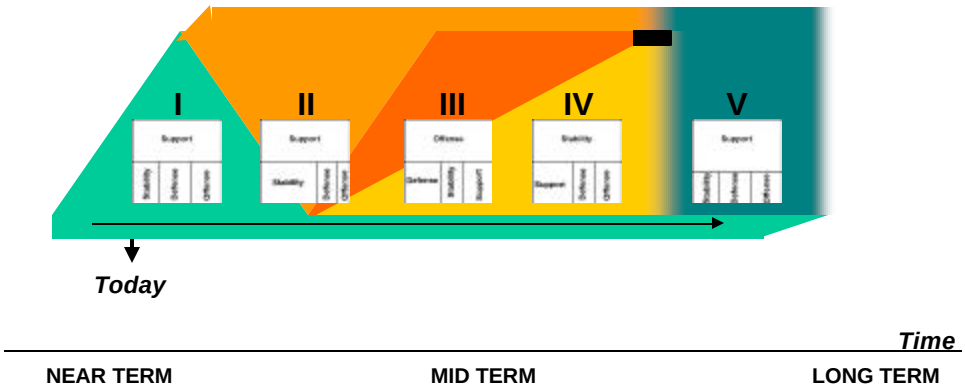

continue until the beginning of Phase V. Meanwhile, Phases II and III would continue, in some cases simultaneously. The phases were not strictly sequential. They were also simultaneous and overlapping. The planners struggled with this notion for a time. A sequentially phased operation is simple to construct and lends itself to easily monitor progress throughout execution. A simultaneous operation, while more complex, did not concern itself with timing of phases. The concept of both simultaneous and sequential phases required some contemplation. The figure above was used by the planners as a discussion tool to help explain how the phases would run sequentially, simultaneously, and overlap.

The chart depicts five phases arrayed over time. The intent of the graphic is to show that actions associated with Phase I will peak as Phase II is initiated, but certain actions will continue well into Phase V. Phase II will begin and will peak in activity as Phase I winds down to residual

activity and as Phases III and IV begin nearly simultaneously. Transition between Phase IV and Phase V may not see a clean break between the two, and thus the graphic depicts some blurring between the two phases. Finally, in an effort to depict proportionality of full spectrum missions within each phase, a diagram was inserted. This diagram represents the proportion of Offense, Defense, Stability, and Support operations that generally characterizes each phase.

The diagram also helped planners understand that there may not be a clear end state to each phase. Perhaps more precisely, the end state of a phase might not be reached prior to initiation of a subsequent phase. Phase end states were removed from the plan and in their place, planners developed conditions for transition to phases. This allowed greater flexibility and supported simultaneous phased activities.

Branches and sequels are activities that may occur within or follow phases. A branch considers options within the existing plan. They may take into consideration the operational impact of weather, friendly disposition or enemy activity, to name just a few. Sequels are operations that will follow the conclusion of a phase and considers the result and relative success of the phase. A sequel may consider action to be taken in the event of victory, stalemate, or defeat. During the concept development, the Army Planning Team developed 7 branches and sequels. These branches and sequels were developed to consider the impact of extended and sustained combat operations on the Army.

Developing the concept for simultaneous, sequential and overlapping phases was a challenge. The planners felt confident, that while it was complex, the concept was sound and realistically executable. Sufficient flexibility was inserted to allow considerations in the rough order of magnitude, or scale, of the operation. Assumptions were made concerning the availability of resources. Partial mobilization was assumed and considered essential to the success of the plan. The magnitude of the resources that the Army could bring to bear would be proportional to the operational risk. Estimates were generally made in division equivalents.

Planners identified broad resource requirements for operations and gave estimates for low, medium, and high risk.

Following the MDMP, the next step would be to evaluate the course of action through war-gaming. Traditional war-gaming such as a "sticky drill" or computer simulation exercise was not feasible or suitable for this campaign plan. The ADCSOP gained support from across the Army to tap into the Army's global expertise to evaluate the concept and to solicit input for further development of the plan. In 15 days the Army Planning Team had developed a far-reaching and dynamic concept for the campaign. The next seven days would see the plan scrutinized and further developed in a war game conducted at the U.S. Army War College at Carlisle Barracks, PA.

War Gaming

The most effective method to conduct course of action analysis is through war gaming. It allows a commander and his staff to visualize the operation. It considers enemy and friendly disposition, terrain, and most significantly, develops a set of actions and counteractions. At the tactical level, the staff typically portrays graphics on a map board to array the friendly and enemy forces. The staff works to collectively consider likely events to take place during the operation. The result of this process should give the staff an understanding of the efficacy of the course of action, and project the friendly and enemy dispositions at the conclusion of the operation.

There are three common techniques that a staff may employ to war game a course of action. The Box Technique is often used when planning time is limited. In the box technique, the operations officer designates certain events throughout the operation to be critical. The staff then analyzes each of these events and records projected results for consideration when comparing potential courses of action. The second method is the Avenue in Depth technique. Here, the staff considers the avenue of approach for the main effort, and then analyzes actions to

be taken on additional avenues, as time permits. The final technique is the Belt Technique. The Belt Technique is the most comprehensive form of analysis and considers all events that are projected to occur throughout the area of operation. The operations officer divides the area into areas of operation with phase lines and/or boundaries, and the entire staff analyzes all forces that can impact any event throughout the operation. This is the most time consuming technique, but it provides the most detailed analysis, covering all units and the entire area of operation. Each of these methods had applicability to the task at hand for the Army Planning Team. No single technique would be suitable for complete ASCP analysis.

Tactical war gaming techniques have certain value when considering a strategic course of action, but there is no single technique that is adequate given the broad scope to be analyzed. While Wedemeyer provided a good precedence to consider when conducting assumption based planning, there was no existing model to war game an Army Strategic Campaign. The planning team saw the need to draw upon the expertise of the entire Army to analyze the plan and to assist in providing direction to the Army component commands. A world-wide message went out to the Army major commands (MACOMs) and the Army component commands announcing the war game and instructing them to provide senior level participation at a week-long war game to be held at the Army War College. Senior level participation varied by organization, but was in most instances at the general officer level. Additionally, invitations were sent to the CINCs, the other services, and various federal agencies, affording them the opportunity to participate.

The Planning Team convened at the War College and established operations to support the war gaming. Senior mentors were brought in to provide strategic guidance and leadership through the analysis. These senior mentors were retired 3 and 4 star generals who had significant strategic experience and were deeply ingrained with the methods of the total Army organization. Senior members of their staff represented each Army MACOM. Unified CINCs generally did not send representatives. Members of the Army Component Command from within their command represented them. For example, U.S. Army South represented USCINCSOUTH. War College

students augmented the team by role playing CINC staffs and the federal agencies engaged in interagency cooperation.

While it was somewhat disappointing that the Unified CINCs did not fully participate in the war game, there was little expectation that they would attend. This was for several reasons. First, the Army had no authority to mandate attendance by joint commands. With world-wide operations tempo at a frenetic rate, it was unlikely that they would be able to spare staff members to participate in what was built as a service war game. Secondly, the initial classification level prevented full coordination and collaboration between the Army Planning Team and the Unified CINCs. Outside of the team, there was little understanding of the breadth of the Army planning effort. Finally, indications from the Joint Staff were that there would be a follow on to the Army war game. This would involve the Unified CINCs. Consequently, little expectation was given for joint command participation.

The war game began with members of the Army Planning Team briefing the Senior Mentors on the campaign plan concept and its construct. The briefing demonstrated how the plan encompassed all elements of national power throughout the campaign. Employment of each element was discussed and tasks and purposes were assigned to each, by phase. Significant was that the military was not always the main effort, and in fact, began as a shaping effort. Senior mentors provided ample guidance and thought provoking discussion. Comments were captured and usually were taken into account as the campaign plan was refined.

During the next three days, each phase of the campaign was analyzed in some detail. While the process most closely represented the Box Technique of tactical war gaming, parts of all three techniques were employed. During this process, charge sheets[27] were prepared for the MACOMs and component commands to use when analyzing their command's role in each phase. The result of this process was a master list of implied tasks that the units must perform in support

[27] Charge Sheets were forms prepared by the Center for Army Analysis as a tool for entering command's comments into the data base.

of the campaign. These tasks were entered into a central data base that was built for the war game by the Center for Army Analysis (CAA). On the final day, MACOMS and component commands reviewed and analyzed these charge sheets and provided these to the planning team for use as Tasks to Subordinate Units.

In retrospect, input from the MACOMs and subordinate commands was not as useful as the planners had hoped. Based on the results of the input, commands had varying degrees of understanding of the requirements. Much of the feedback was well developed and obviously coordinated with their headquarters. In some cases, MACOMs and subordinate commands either provided hurried responses to meet the data input deadline, or failed to fully develop their requirements so they could be translated into tasks.

War gaming the ASCP broke new ground and was fairly successful. Some of the more significant benefits realized were a result of the discussions led by the Senior Mentors in the Plenary Sessions. They offered valuable insight on regional planning, political situations, and on "how the Army runs". Their historical vignettes were especially helpful and caused members to consider issues they had previously overlooked. Examples included the impact of a national draft, the ability of high demand, low density support units to conduct split based operations, and the ability of the national industrial base to support long term requirements. Planners envisioned more action/counteraction than what actually occurred. They saw this process as integral to refining their course of action based on enemy reaction to operations within the campaign. In the end, this did not occur as the Senior Mentors rightly steered the group away from the tactical and operational level, maintaining a strategic focus.

The war game produced an extensive database that had to be analyzed to finalize the ASCP. Armed with this database, as well as reams of guidance and input for refining the campaign plan, the Planning Team again relocated. This time they returned to the secure facilities at Fort Belvoir. On 14 September the team consisted of approximately 40 members of the Army staff with augmentation from SAMS and INSCOM. When the team moved to Carlisle,

they grew to over 200 officers and civilians as they participated in the war game process. On 8 October, approximately 60 members reconvened at INSCOM to begin the task of writing the ASCP.

Writing the Plan

As the team reconvened they had to agree on a process to produce a written product based on the work completed over the previous 4 weeks. There was a fair amount of discussion over the vision for the final format. Since there was no prescribed format for a service strategic campaign plan, the team had some literary license. While the team considered using a unique format resembling a civilian corporate strategy paper, the final draft was prepared along the lines of a military campaign plan format as described in Joint Publication 5-00.1. There was concern that the work conducted over the last month could go for naught if the team were to continue to debate the content that was refined at Carlisle. Realizing that there was a requirement to produce a final draft campaign plan within 2 weeks, the team set forth a process to write, refine, package, and obtain approval for the campaign plan.

The Planning Team considered the plan outline that they prepared in a powerpoint presentation to be their base order. This had been updated as a result of the Carlisle War Game. The team split into two groups. One group spent a day revalidating the assumptions to the plan. The other team, formed largely of strategists from DAMO-SS, took the course of action as presented in Carlisle and assigned a rough order of magnitude in troops to task. They used division equivalent units that were assigned for each operation and established variables according to low, medium, or high risk. As this neared completion, a small group of officers scrubbed the input from MACOMs to validate the tasks to subordinate units. This proved to be an extremely arduous task, as the quality of input varied widely.

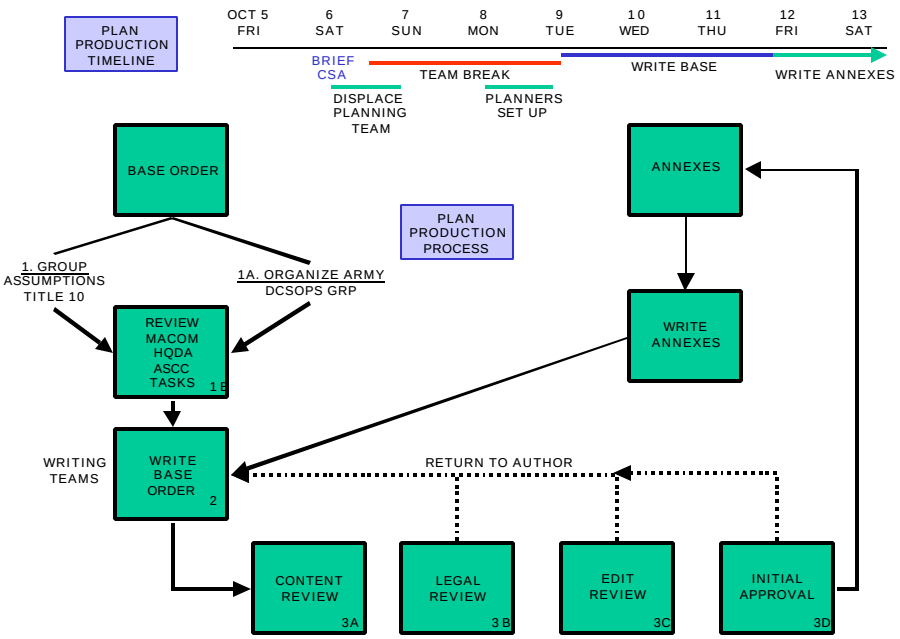

As a result of this input, a writing team expanded the outline into prose form. The general outline from Joint Publication 5-00.1 was used as a guide. A departure from the format was a section on operational risk. The team examined risk along each operational line and by phase in terms of time, resources, people, and capabilities. Additionally, a section on legal considerations was prepared. This was originally a separate section, but later became an annex. As the writing progressed, the team employed a detailed review process to screen the product.

Three separate reviews were conducted. A content review examined the campaign plan for doctrinal content and to ensure it was in compliance with guidance received at the Carlisle War Game and from the ADCSOP. A legal review was conducted by two Judge Advocate General (JAG) Officers to ensure there was no apparent non-compliance with existing statutes or regulations. This was an extremely valuable process, as the aspects of Title 10 frequently required amplification. Finally, an editing review was conducted, looking for format, spelling and grammatical errors. From there, the plan would be presented to the ADCSOP, who would eventually present it to the Army leadership. Presentations to the ADCSOP were frequent and largely informal. Guidance was frequently given on the fly, with modifications being quickly assimilated. Only in instances where significant changes were made would the team provide a

back-brief. This entire process went through a number of iterations. In the end, the final product was version 14.

The final product was presented to the Chief of Staff of the Army 6 weeks after the attack on the World Trade Center and the Pentagon. The ASCP was the result of a collective effort from all over the Army. In some respects it broke new ground. It was written for a task that the Army had no model. Yet in other ways, it was a chance to revisit history and the work of Albert Wedemeyer and his team of Army planners as they tackled a similar endeavor 60 years prior. There were tremendous lessons learned by all who participated in the experience. It is important to consider these lessons, as the ASCP will be executed over a period of years, if not decades.

CHAPTER THREE

LESSONS LEARNED

This chapter will discuss the lessons learned during the process of writing the ASCP from a planner's perspective. This is not a review or critique of Joint doctrine, Army doctrine, or the MDMP process. Many of the problems and challenges faced by the SAMS Fellows were addressed or at least touched upon in current Joint and Army doctrine. Yet the planners from the SAMS Fellowship still did not really know what to expect when they were assigned this task. The lessons discussed in this section will help the reader (future strategic planner) confirm or deny his own thoughts, knowledge, and expectations of contemporary strategic planning. Hopefully this account of experiences will alleviate apprehension for strategic planners faced with a similar task in the future. These lessons learned include insights on assumption based planning, the roles of a strategic level planner, and some tactics, techniques, and procedures. The first area is assumption based planning.

Assumption Based Planning

Planners at the strategic level must be comfortable with making assumptions about what higher level decision-makers might decide. One's expectation as a strategic planner should be that little or no specific guidance will be provided. Planners must consider several factors that will enable them to pick a direction of thought. The factors covered in this section include the Wedemeyer method, the importance of MA, examining what can the enemy do, phasing and simultaneous versus sequential operations, risk, and the assumption based COA. As was discussed earlier in this study, there have been two events of the magnitude of Pearl Harbor in the last sixty years where the strategic planners received no direct guidance. Planners can anticipate

the same thing happening in the future. The best way to obtain the guidance in a timely fashion is to use the Wedemeyer method.

In order to conduct a thorough MDMP for the ASCP, the Army planning team had to first write the MA and COA for the National Strategy, the National Military Strategy, and the Home Land Security Strategy. They did this by reviewing the President's speeches, comments made during press conferences, and press releases. Additionally, the planners looked at public comments made by other key administration officials including the Vice President, Secretary of State, Secretary of Defense, the Chairman of the Joint Chiefs of Staff, and various comments made by high level Department of Defense and Joint Chiefs of Staff officials in the Pentagon. Key phases from the President's speech to Congress and the nation on 20 September 2001 like, "we will defeat terrorism and destroy it where it grows", were instrumental in constructing restated mission statements and determining tasks. [28]

The public statements made by the National Leadership served as an excellent feedback tool for the team. Portions of the mission analysis were provided to the Pentagon for review and comment during the early days of the process. Language that the team used in early drafts of mission analysis began to appear in public statements made by senior national leaders. Specifically, when the President addressed the Congress on 20 September, he used some of the exact semantics that were written by the team. It is not known if these drafts made it to the White House, or if it was an instance of parallel development of concepts. In either case, it was a clear-cut endorsement that the team was thinking on the same lines as the nation's leaders. As this foundation of higher level guidance was obtained, there were several areas for the planners to consider when picking a direction of thought. The first issue pertains to MA.

During several of the problem solving drills, many planning team members sought to skip MA or gloss over it and go right to COA development. It is critical to look at the facts bearing on

[28] President's 20 September 2001 Speech to Congress.

the problem and to define assumptions when focused on assumption based planning. This assertion is not new. It is part of the MDMP for Joint and Army doctrine. However, for various reasons, some CGSC and War College graduates want to skip MA. Those who skip MA do not portend to offer this as a more effective method. Rather, it is merely a short cut that must be avoided despite temptation to the contrary.

The enemy should always be at the vortex of the planning process. Planners must continually question enemy capability. Many inexperienced planners want to guess what the enemy will do or think they know what the enemy will do. No one knows but the enemy! There are no absolutes in planning. There is one lesson learned that is an exception. Never make an assumption that the enemy will not chose to execute a feasible, acceptable and suitable COA. Planners must ask themselves "What can the enemy do?" The planner must determine enemy capabilities and the enemy's possible range of options. Another consideration for assumption based planning is phasing and simultaneous versus sequential operations.

The planners had to deal with opinions from other officers that ranged from no phasing to simultaneous and sequential operational phasing. At the strategic level, planners will most likely encounter phasing that is both simultaneous and sequential. The magnitude of the global times and distances involved will make the strategic planner address simultaneous and sequential phasing of operations. As discussed in chapter two, phases will occur consecutively, concurrently, and they will overlap. In some cases the planner may consider phases that never end. The conditions for transition may be met within the phase and the actions may continue indefinitely. Phasing is vital. A campaign plan is an array of operations linked in time, space, and purpose. Phasing is the method to accomplish this array. The time aspect of phasing is important from an assumption based planning aspect. A critical assumption one must make is how much time the national leadership and the Joint Staff will allow to set the conditions, execute, and then terminate the campaign.

At the tactical level planners often address risk at the end of a plan. It often comes as an after thought. At the strategic level, risk must be covered early in the written campaign plan product. If the planners do not cover risk early in the briefing it is not uncommon for decision-makers to raise questions about risk early in the briefing process. There are many ways to assess and manage risk. Guidance from members of the Chief of Staff of the Army's (CSA) personal staff provided insight on how the Chief approaches strategic risk. The four categories the CSA focused on were: people, time, resources, and capabilities. The planners weighed these categories and assessed them as low, moderate or high risk based on the respective COA.

The last key consideration was how to determine a COA in the absence of guidance. In developing a COA, a planner must array enemy and friendly forces. For the National Strategy and the National Military Strategy the team did not know how the national leadership, to include the Congress, would approach the threat. A large mobilization would potentially defeat any threat. Yet, this approach could be considered untenable. In determining friendly force requirements in a given scenario, variables of a rough order of magnitude were developed in division-sized equivalents. Where contingency plans existed, the planners used this as a baseline. In the absence of a plan, estimates of force requirements were developed. For example, in a given theater, it was estimated that a force the equivalent size of 3 divisions, plus support, were required to defeat the enemy with minimal risk. Using two divisions could still meet the requirement if planners assumed moderate risk. A force of less than two divisions was deemed high risk. These levels of risk and variables were written into the plan. The planners assigned and linked tasks and purposes to all the elements of national power including diplomatic, informational, military, and economic (DIME) for the National Strategy, the regional CINCs for the National Military Strategy, and Joint Forces Command for Home Land Security. Once these COAs were complete and agreed upon by senior level decision-makers as reasonable, the Army strategic planners were able to continue the process of developing the ASCP.

The Roles of a Strategic Level Planner

When the SAMS Fellows reported for duty with the ASCP planning team, they found themselves in an interesting position. They were augmentee planners on an ad hoc team built around a core of officers from Army DCSOPS, DAMO-SS. The vast majority of the team were officers of equal or higher rank and with as much or more experience in the Pentagon. One of the many questions running through their minds (and the minds of most planners in the same situation) is how they would assimilate into the group. The Fellows found that the group members had lofty expectations. The Fellows were looked upon as experts by some, and elitists by others. In both cases The Fellows were expected to be emergent leaders, regardless of rank.

This emergent leadership is subject to change based on demonstrated capabilities and performance. SAMS Fellows quickly found themselves at the center of the effort. Some of the challenges they faced included obtaining a charter up front, rapidly assessing the strengths and weaknesses of the team, working collaboratively with the in-place staff, dealing with different political environments, working a daily psyop plan, and taking care of one's self and the team.

The SAMS Fellows learned that it was important to get a charter prior to leaving home station and to establish the boundaries and rules for mission creep. All of the augmentee planners were extended past the initial tasking window several times. This still met the intent of the original tasking and all headquarters understood the situation and voiced no objections to the extensions. It is also important to know who the tasking headquarters is and the individual responsible for the tasking. Planners must understand who has tasking authority and whom to call to provide updates and to request assistance. It is important to call home station and provide periodic updates to keep them in the loop. This may seem like common sense, but it is quite easy to get caught up in a real world tasking with short suspenses, long hours, and thus fail to make routine contact. Just being able to get the right person to a secure phone at any given time can sometimes be a challenge.

As a planning leader one must rapidly assess the strengths and weaknesses of each team member and assign commensurate tasks. The Army planning team had no joint or interagency representation. There were team members who had joint and interagency experience, as well as some with political, diplomatic, informational, and economic operational experience. The Fellows learned that some officers may be reluctant to volunteer their expertise in a certain area or realize it is needed. It is essential to find those experts early and assign them the appropriate tasks.

When joining a planning group that has been together for even a short time, it is necessary to quickly develop a good relationship with the team members. There will not be time to work through all the developing group dynamics. The ASCP team had to produce the first product three days after the team assembled. Leaders must ensure that a collegial work atmosphere exists. Given group dynamics, some existing members may see augmentees as a disrupting influence from the start. Some will see the addition of augmentees as a statement that they can not accomplish the mission without help and will take exception (particularly if the augmentees are put in charge). Others will welcome the help. It is wise to approach the group in a manner that does not challenge the competency of the original group.

One of the biggest lessons learned for the SAMS Fellows was the effect that different political environments have on the planning process at the strategic level. Obviously the politics of the civilian level leadership and different administrative agencies have a huge impact and that is what most planners would expect. Political considerations related to beltway issues, inter-service rivalry, procurement programs, and transformation issues came into light as some staff officers exhibited parochialism (either intentionally or inadvertently) in subtle ways through the process. Only days after the attacks on the WTC and the Pentagon, there were pressures to pursue or exclude certain COAs for what appeared to be political reasons. These surfaced before MA was complete or any guidance had come from the national leaders or the Joint Chiefs. The country was at war and the focus for some team members was political, advancing certain weapons systems, and pursuing peacetime agendas as if it was a normal POM cycle. Planners

were often frustrated and had the perception that some were more concerned with peacetime agendas than wartime requirements.

After the initial MA, the team began to grow. Additional officers and DA civilians joined the team to assist and add their expertise for the rest of the process. The majority of these people came from the DA Staff, Army Service Component Commands (ASCCs) and Major Army Commands (MACOMs). They were all experts in their respective fields and were eager to contribute to the effort. Some arrived having spent years belonging to bureaucratic organizations and were more accustomed to advancing and protecting programs than planning campaigns. As time went on, officers who had agendas to promote did so, often without realizing it. Agendas included programs, projects, or individual recognition. While no one would ever admit to this, the lesson for planners was to be cognizant of this group dynamic. In a functional group it will not cause great harm to the effort, but it may become a source of friction. By being aware of this phenomenon, planners can deal with the circumstances is a way that reduces the friction.

Planners must find ways to channel wasted energy into positive results for the task at hand. An approach the SAMS Fellows used to deal with the delicate politics was by developing what they called a daily "psyop plan." These psyop plans are not along the lines of the traditional psychological operation although they roughly follow the same principles. There were two types of psyop plans, one for the team and one for the product externally.

The psyop plan for the team was based on selling ideas (or the prevailing ideas) to the team as a whole. In the case of the ASCP, there was a small group that thought the plan should be more of a corporate vision instead of a campaign plan. The challenge as a planner was to bend those flawed ideas into a better product. Doctrine was often a good starting point. Doctrine is hard to argue against and one can use it to support the rationale of a particular issue when briefing the plan.

The external psyop plan needs to be about how to get ideas accepted by the key decision-makers and their staffs. Members of the team who came from the Army Staff were particularly

helpful in this area. They were able to give insight on the decision-maker's preferred word usage or semantical style. They were also a good source for tips on briefing techniques or presentation styles that had been successful in the past.

Planners must work closely with the key decision-maker's principal staff. The key decision-maker will always be pressed for time. It is important to bring his staff into the process and ask them to review products prior to briefings. They can tell if the product is on track. They will often tell the boss they have seen the briefing or plan and provide positive comments.

Using doctrine and past similar problems or campaigns to illustrate an idea was a good way to advance a concept. Doctrine was always a good place to start. It is perfectly fine to depart from doctrine as long as the position is supportable. If doctrine applies, it is often hard to refute and it provides a basis for the position whether the decision-maker agrees or not. Referencing past similar problems or campaigns is also useful. During the MA and COA development the planning team referred to Wedemeyer's writings and the Philippine Campaign Plan for 1944. Wedemeyer was used to show how strategic aims could be deduced from public statements. The Phillipine Campaign Plan of 1944 was cited as an example of a well-written campaign plan at the strategic level. Of note was its brevity while still providing clear-cut direction. Both were used as illustrations in several briefings.

At the strategic level the planning process will take weeks or months. Several campaigns may need to be written over an extended period of time. Planners who do not maintain an appropriate and healthy lifestyle will quickly become ineffective. The SAMS Fellows had sufficient sleep, ate well, and did physical training (PT) at least every other day until the last week. The last week was spent writing the campaign plan, and for this limited period hours were extended until late at night. In order to ensure success, planners must take action to minimize irregular hours that can diminish personal effectiveness. A good idea is to try to tell the boss when you think the team or certain individuals need a break. A series of all nighters over the

course of several weeks or months will quickly cause harm to the team. Minimum adequate rest is absolutely vital to planning success.

Thus far this study examined the role of the planner as a leader. This portion of the section discussed some of the challenges that planners may face. These challenges included getting a charter up front, rapidly assessing the strengths and weaknesses of the team, working collaboratively with the core staff, dealing with different political environments, working a daily psyop plan, and taking care of yourself and the team. The second role that this paper will cover is the planner's role as a doctrinal expert.

A strategic planner is typically considered to be a doctrinal expert. It is incumbent on a planner to ensure that in the event the team strays from doctrine it is a deliberate and conscious deviation. FM 3-0 states that, "doctrine is the concise expression of how Army forces contribute to unified action in campaigns, major operations, battles and engagements. While it complements joint doctrine, Army doctrine also describes the Army's approach and contributions to full spectrum operations on land. Army doctrine is authoritative but not prescriptive. Where conflicts between Army and joint doctrine arise, joint doctrine takes precedence."[29] While going through the planning process one may hear doctrinal assertions that are incorrect or outdated. Planners must be the guardians of doctrine, ensuring that even senior officers are mindful of where doctrine relates. Deviation may be appropriate, but only when carefully and deliberately considered.

One of the problems the team faced was a notion by some members to skip MA and jump right into COA development. As the doctrinal expert planners must steer other officers of equal and higher rank through the perilous minefield that skipping MA presents. The usual counsel is to never skip a step, however, one may abbreviate if necessary. When the team abbreviates a step, the doctrinal expert should provide focus and get to the essentials. In one problem solving

[29] FM 3-0, pg. 1-14.

drill, two SAMS Fellows were unable to convince the assembled ad hoc team to do MA first. As they sat next to each other, one Fellow listened to the discussion while the other Fellow did the MA on a single sheet of paper. The usual confusion ensued after thirty minutes because no one had laid out the key facts, assumptions, tasks, and purposes. During the ensuing silence with a motion to take a break, the Fellows told the team they had done the MA and were prepared to brief everyone when they came back from the break.

Planners must be vigilant to ensure proper use of terminology and definitions. In a group environment this can become a challenge because the planner may be perceived as a "know-it-all." Words are important. If you can not explain what you are talking about, your ideas will not be accepted. Officers could often be heard using wrestling or dancing terms such as "Take the enemy down," "take him out," "hold on to him," "wax him" and other vague terms. A planner should use the terms in FM 101-5-1, Operational Terms and Graphics and Joint Publication 1-02, DOD Dictionary of Military and Associated Terms. The Army planning team had a lengthy discussion over defeat versus destroy. When the question was asked what the actual words were every eye in the room looked to the SAMS fellows to provide the answer. The doctrinal definitions became the point of departure in determining if those definitions meant the same as the national leaders intended within the assumption-based plan.

Another potential pitfall was that some members of the team wanted to avoid determining the strategic conditions for transition or the endstate of the campaign. After conducting MA, or as part of the MA, one must determine strategic conditions for transition and / or the endstate for the campaign. A conflict termination analysis is needed. As mentioned earlier in the discussion on phasing, determining conditions for transition are probably more appropriate and useful than definitive endstates by phase. It is possible to have a very definitive endstate for conflict termination. When determining the conditions for transition or an end state, consider the enemy, friendly, terrain (global perspective), and a posture for an on order or follow on mission. What should the enemy look like? What should the friendly forces look like? What is the proposed

global posture? What is one's desired posture at conflict termination? These questions must be answered up front or the team may risk losing planning focus. Do not skip the conflict termination analysis.

The team struggled with the Center of gravity (COG) analysis. COG analysis and discussion started on virtually the first day the team assembled. There was never complete consensus on the enemy COG until the campaign plan was complete. The team reviewed and considered two separately developed COG analyses. One group was comprised of team members who conducted their analysis during break-out discussions. A second analysis was prepared at Fort Leavenworth by a team from SAMS. No clear guidance was given at the time concerning which analysis to plan against. Planning was able to progress in spite of this because the team saw clear lines of operation and decisive points early in the process. By using these decisive points to plan against, an immediate decision on COG analysis was not needed, and the planning effort progressed.

The planners learned an important lesson as they struggled with COG selection. The friction that can result from diverging opinions can be dysfunctional. Senior officers gave differing views on the criticality of making a selection early in the process. Deferring this decision is not necessarily a detriment. In this instance it allowed the team to continue with focus on decisive points. The increased friction may have been far more harmful than any inconvenience created by deferring COG selection. If planning can not continue without a determination, it is best to designate a group or individual empowered to make that decision and proceed.

One of the interesting aspects of writing the ASCP was that the national leaders, Joint, and Army levels of the commander's intent were all deduced by the Army planning staff. FM 3-0 states that, "commanders express their vision as the commander's intent. The staff and subordinates measure the plans and orders that transform thought to action against it."[30] In effect, the team had to measure the campaign plan against their own thoughts and not the higher level

[30] FM 3-0, pg. 5-14.

commanders. Additionally there was a disagreement within the team on what form the ASCP commander's intent would take. One group wanted more of a corporate vision statement that was several pages long. Another group supported a commander's intent that was more consistent with doctrine in accordance with FM 3-0 and FM 101-5. FM 101-5 describes the commander's intent as a clear concise statement that describes the broader purpose, key tasks, and end state of the campaign.[31] The commander's intent statement for the ASCP described the broader purpose, key tasks, and the end state of the campaign plan and was approximately six lines long. As is the case with conflict termination, the end state should include references to the condition of the enemy, what the friendly forces look like, what will the terrain look like from a global perspective, and what the posture will be for an on-order or follow on mission. The planning team put a deduced annotation following the commander's intent so that it was clear to staffers that these where not the CSA's words as the plan circulated for approval. Although the team did not start with the CSA's words, the team did have members of his staff look at the proposal prior to forwarding the final ASCP. This allowed the planners to use words and terminology that were similar to what the CSA might use. In the end, the intent sent forward was written in accordance with published doctrine. In deference to the group of planners who believed in a more polished corporate style, the cover letter of transmittal was written to include this as it conveyed the executive summary.

After the team completed the ASCP, a copy of the CJCS' commander's intent for Operation Enduring Freedom surfaced in a briefing. It was very similar to the assumption based intent the Army planning team had written several weeks earlier and it was written exactly in accordance with the Army's FM 101-5 with a purpose, key tasks, and end state in a concise short paragraph. It was also an example of how other staffs may borrow products from each other. It is important to get the doctrine right in order to have the correct point of departure. Concepts may be

[31] FM 101-5, pg 5-9.

synchronized between staff levels and staffs to give decision-makers the best doctrinal information.

Augmentees, particularly those coming from Fort Leavenworth and SAMS are immediately viewed as doctrinal experts. When thrust in this position, planners must be prepared to educate decision makers and planning team members on what doctrine says and means. The planner's role as a doctrinal expert was all encompassing. In assuming the role as the presumed doctrinal expert, the team and its leaders will expect the planner to set the doctrinal azimuth. It is essential to ensure that if the team strays from doctrine it is a deliberate and conscious deviation.

Techniques, and Procedures

A common term of reference of how the Army specifies how a task should be performed is tactics, techniques, and procedures (TTPs). The planners used the term strategy, techniques and procedures (STPs) instead of TTPs to help get their thinking out of the tactical level of war. Those were, in fact, techniques and procedures to be performed when conducting high level planning. They found that when a team member used the word tactics or referenced experiences at the tactical level, the discussion inevitably headed down the wrong road. Most members of the team were comfortable at the tactical level of war. The SAMS planners were constantly struggling to keep themselves and the rest of the team at the strategic level. Planners occasionally considered the operational level aspects as needed, but the key was to maintain a strategic focus. The techniques and procedures in this portion of the lessons learned will include general observations, fighting the dark side of the force, and what a planner should consider putting in his planning bag / tool box.

The first subject area will discuss general observations. One of the things the planners kept telling themselves was that there was bad news and good news. The bad news was that an ASCP had never been written before. The good news was that an ASCP had never been written before. If a strategic planner finds himself in a similar situation he will probably find out that no one has quite ever done what he is about to do. With the current speed of the changes in technology, the

compressed strategic planning times, the complexity, and the global distances involved, strategic planners will be harder pressed to find any exact templates to guide them. This served as a benefit at times, as there was no precedence to counter ideas and thus add more friction.

One of the challenges the team faced was changing guidance from decision-makers. Three key things primarily affected guidance changes. The first was that the decision makers were in several different briefings receiving guidance, at times from several varied sources that the planners were not aware of. The decision makers would occasionally lose track of exactly what they told the planners. The second mistake was that planners were not able to back brief the decision maker on the guidance given before he left the briefings. The last area was that the planners were often excluded from the high level briefings. New guidance was given in a briefing to a high level decision maker and the guidance was not passed or completely passed to the planners. At times when the guidance was passed it was done in terms that may not have made strategic or doctrinal sense and the planner was in no position to clarify the guidance because he was not at the briefing.

A method to prevent unexpected guidance changes is to maintain an electronic list of guidance that the boss gave projected upon a separate screen from the briefing screen. Project it where it can be seen by every one, including the boss. This will do two things. It will allow the boss to correct wording if the scribe gets it wrong or if the boss misspoke. It will also allow the team to back brief the boss before he leaves. If the decision maker is uncomfortable with the projection, have the scribe keep the guidance on a separate computer and back brief the boss verbally before he departs. It is best for the entire team to hear the changes the decision maker may make.

The planners, or at least the lead planner, must be in all the briefings to the high level decision makers so they can hear the guidance for themselves. The planners for the ASCP were not able to be in every briefing because of space limitations or the need to have only officers above a certain grade present. If that happens, the planners need to get a thorough back brief and

feed-back from the briefer. Briefings will evolve over time. The ASCP planners averted a near disaster when by accident one of the planners observed an updated copy of the National Strategy that had significant changes of which the planners had no knowledge. The changes had been made several days earlier and the planners were left out of the loop. Fortunately, the changes were quickly incorporated into the ASCP as needed.

Lead planners must develop and ruthlessly adhere to planning timelines. There was resistance within the planning team to allocate specific time requirements leading up to intermediate and final products. Timelines gage progress and how much detail can be included in the solutions. The planning timeline should be the first thing established before work begins on a task. Each team member must be aware of this and proceed in a manner that the job is completed as best as possible and in accordance with the allocated time.

One person needs to take charge and drive the process. There was a point in the development of the ASCP that officers who had stood in the back ground early in the process felt a need to step in and change the direction the team was moving. If that happens, the planners need to talk to the senior officers off line and come to an agreement on who will drive the process. This is a daunting task, but necessary in order to keep the plan on schedule and in keeping with the agreed upon course.

There was a push to develop COAs before there was a clear understanding of the red picture. Planners must never lay down blue graphics or develop COAs until the enemy picture is developed. The picture does not have to be perfect. However, it must be generally accepted as reasonably accurate by the intelligence community.

The Judge Advocate General (JAG) officers were invaluable and indispensable. The JAG officers were essential for conducting legal reviews of the team products and in helping the team understand all the legal aspects of Title 10. Additionally, they proved to be the best proof-readers and they provided a check on the technical verbiage in the campaign plan. If the lawyers had to ask what the planners meant about a certain concept, then the planners knew they probably should

re-word or re-write that portion of the document. Lawyers should always be assigned to a strategic planning team.

During the ASCP development the SAMS Fellows dealt with a number of unanticipated problems. They often referred to those problems as fighting the dark side of the force. The first example was the rogue tasking.

The SAMS planners had been planning for several weeks. One night as they were getting ready to leave for the evening they got a call to report to the Pentagon immediately. When they questioned the tasker and asked what to bring with them, the planners were told to just bring their minds. They had entered what they termed "the rogue tasking zone". The team as a whole had become recognized for the good work completed up to that point. The rogue task the planners were given was nothing close to the original tasking charter, had immense strategic implications, and answers were expected by a higher authority in a compressed time frame.

To respond to the tasking the SAMS planners became part of a new ad hoc planning team which included planners from other services who were meeting each other for the first time. The team leader was new to virtually everyone on the team. The team would not have time to ease into the task. Planners were told they may not be working in their functional area. One of the SAMS Fellows was a logistician. He was the lead operational planner for one of the LOs. Throughout this project, the planners reverted to the basics of planning. They started with the doctrine, a time line, standard MDMP, and as many experts on the problem at hand that could be found on short notice. Given that, one of their major challenges became fatigue.

One way that the Fellows dealt with fatigue was by using phased planning support. This happened by accident but it became very important during the latter stages of the ASCP development. An additional Fellow from SAMS joined the first two Fellows during the Carlisle Barracks War Game. He was fresh and able to come in and look at the problem with a new set of eyes. He was able to verify that the planners were on track and he added credibility to the current

efforts because he spoke the same planning language. The last obstacle became the fight against perfection.

It has been said that perfect is the enemy of good. Everyone on the team was naturally working very hard and trying to produce the best product. There were several instances where a lack of information held up the process. At one stage, a vital set of data was needed for planning to continue. The team was frustrated because they felt almost all of the information was at hand. With compressed time lines it is not unusual to come up with something less than the perfect answer. Planners need to state the limitations up front to the decision maker. Having the order of magnitude right at the strategic level is often good enough.

There are several tools that the strategic planner should consider bringing to help him with the techniques and procedures. The SAMS Fellows had eight hours notice to get ready and to decide what to bring prior to deploying for the ASCP tasking. Thinking that they could get most references from DCSOPS when they arrived at the Pentagon, they traveled light. They took lap top computers, battle dress and B uniforms, a Joint Electronic Library compact disk, FM 3-0 Operations, and a copy of the JTF Headquarters Master Training Guide, Extract: The Operational Planning Process, 1 May 1996. As it turned out they were not able to get references right away because of the disruption at the Pentagon. They eventually were able to get some things over the internet, fax, secure land line, and had reference materials shipped from Fort Leavenworth. Uniforms were not clearly specified in the tasking order. It turned out that civilian clothes were required for a substantial portion of the planning period. The Fellows had to have more civilian clothes sent later. The following list is what they eventually acquired and used during the ASCP development.

-*JP 5-00.1 Joint Doctrine for Campaign Planning*

-*JP 5-00.2 Joint Task Force Planning Guidance and Procedures*

-*JTF Headquarters Master Training Guide*, Extract: The Operational Planning Process, 1 May 1996

-Joint Electronic Library (JEL) Disk

-*FM 3-0 Operations*, June 2001

-*FM 3-93 The Army in Theater Operations*, 2nd Draft March 2001

-*FM 101-5 Staff Organization and Operations*

-*FM 101-5-1 Operational Terms and Graphics*

-*ST 100-9 The Tactical Decision Making Process*

-Plan of Operations to Capture The Philippine Islands, 24 Sep 1943, 20 pgs.

-*How the Army Runs*, US Army War College

This chapter discussed the lessons learned during the process of writing the ASCP from a planner's perspective. These lessons learned included insights on assumption based planning, the roles of a strategic level planner, and some suggested techniques, and procedures. These were some of the more significant events and challenges that the SAMS Fellows faced during their ASCP experience. Hopefully the lessons discussed in this chapter will help the reader (future strategic planner) confirm or deny expectations of contemporary strategic planning and help to alleviate some of the apprehension that strategic planners may face given a similar task in the future.

CHAPTER FOUR

CONCLUSION

On 10 September 1941, Major Albert Wedemeyer of the Pentagon War Plans Division submitted the Army's plan to support World War II to the Secretary of War. Exactly sixty years later, the United States Army stood on the threshold of an equally daunting task. Major Wedemeyer developed the plan using guidance that was sometimes incomplete, and at other times was indirectly derived from statements of national leaders. In September 2001, Army planners successfully used the same method to derive guidance when constructing the Army Strategic Campaign Plan for the Global War on Terror. All too often, Army planners become accustomed to receiving clear and concise guidance for creating a plan. In preparing the ASCP, the Army planners demonstrated that assumption based planning allows the development of a plan given little or no stated guidance or strategy from senior leaders.

This paper discussed the challenges of planning at the strategic level of war, the techniques used to address those challenges, and the lessons learned during the process of developing the ASCP. This study covered several areas. A chronology of events painted a picture of the time constraints the ASCP planning team faced and how the process developed. The paper discussed how the planning team addressed the specific problems of assembling the team, determining the campaign plan design, and using assumption based planning and the Wedemeyer method. In the end, Albert Wedemeyer's assumption based planning method proved to be quite sound. While he lacked clear national guidance, he was able to deduce defensible assumptions and direction. His success in 1941 provided the impetus for the Army planning team to use assumption based planning to develop the ASCP for Operation Enduring Freedom. This monograph also addressed

developing the plan using the elements of operational design, wargaming, and writing the actual ASCP.

The study also covered the lessons learned during the process of writing the ASCP from a planner's perspective. These lessons learned included insights on assumption based planning, the roles of a planner, and some tactics, techniques, and procedures. This paper discussed the lessons learned during the process of writing the ASCP from a planner's perspective. These lessons learned included insights on assumption based planning, the roles of a strategic level planner, and some TTPs. These lessons learned covered some of the more significant and unexpected problems and challenges that the planners faced during their ASCP experience. The lessons discussed in this monograph were meant to assist the reader (future strategic planner) to confirm or deny expectations of contemporary strategic planning and help to alleviate some of the apprehension that strategic planners may face given a similar task.

The purpose of the ASCP was to permit the Army to quickly begin planning and to provide direction for the Army to meet its obligations under Title 10 of the U.S. Code. The Army needed to quickly transition from a peace time to a war time status and be prepared to rapidly respond to directions from the highest levels of the nation, the Joint Staff, and the warfighting CINCs. The ASCP in its final form established the basis for the rapid transition from peace to war.

The final product was presented to the Chief of Staff of the Army 6 weeks after the attack on the World Trade Center and the Pentagon. The ASCP was the result of a collective effort from all over the Army. In some respects it broke new ground. It was written for a task that the Army had no model. The Army planners for Operation Enduring Freedom used the experiences of Albert Wedemeyer and his team of Army planners who had faced a similar strategic planning challenge 60 years prior. The planners were able to overcome the lack of strategic guidance to produce a campaign plan for the Army and provide the stimulus for facilitating the development of the National Strategy, the National Military Strategy, and the Strategy for Homeland Defense. There were tremendous lessons learned by all that participated in the ASCP experience. It is

important to consider these lessons, as the Army will execute the ASCP over a period of years, if not decades.

BIBLIOGRAPHY

BOOKS

Kirkpatrick, Charles C. An Unkown Future and a Doubtful Present: Writing the Victory Plan of 1941. Washington: United Staes Army Center for Military History, 1992.

Matloff, Maurice and Edwin M. Snell. Strategic Planning for Coalition Warfare, The United States Army in World War II. Washington: Department of the Army Historical Division, 1953.

Turabian, Kate L. *A Manual for Writers of Term Papers, Theses, and Dissertations*. 6th ed. Chicago: University of Chicago Press, 1996.

Watson, Mark Skinner. Chief of Staff: Prewar Plans and Preparations, The United States Army in World War II. Washington: Department of the Army Historical Division, 1950.

Wedemyer, Albert C. Wedemeyer Reports! New York: Henry Holt & Company, 1958.

DOCTRINAL PUBLICATIONS

Chairman Joint Chiefs of Staff. *Joint Pub 1-02 Department of Defense Dictionary of Military Terms.* Washington D.C.: U.S. Government Printing Office, 2000.

_____. *Joint Pub 5-00.1 Joint Doctrine for Campaign Planning, Final Coordination*. Washington D.C.: U.S. Government Printing Office, 16 April 2001.

_____. *Joint Pub 5-00.2 Joint Task Force Planning Guidance and Procedures.* Washington D.C.: U.S. Government Printing Office, 16 April 2001.

_____. *Joint Electronic Library (JEL) Disk*. Washington D.C.: U.S. Government Printing Office, September 2001.

Department of the Army. *FM 3-0, Operations.* Washington, D.C.: U.S. Government Printing Office, 14 June 2001.

_____. *FM 3-93, The Army in Theater Operations, 2nd Draft.* Washington D.C.: U.S. Government Printing Office, March 2001.

_____. *FM 101-5, Staff Organization and Operations.* Washington D.C.: U.S. Government Printing Office, 31 May 1997.

_____. *FM 101-5-1, Operational Terms and Graphics.* Washington D.C.: U.S. Government Printing Office, 30 September 1997.

Joint War Plans Committee. *Plan of Operations to Recapture the Philippine Islands.* Washington D.C.: Joint Secretariat, 24 September 1943, 20 pgs.

USACOM. *Joint Task Force Headquarters Master Training Guide, Extract: The Operational Planning Process, Version 2.5, JTF HQ MTG*. Norfolk, VA: USACOM Headquarters, 1 May 1996.

U.S. Army Command and General Staff College. *ST 100-3, Battle Book.* Fort Leavenworth, KS: U.S. Army Command and General Staff College, 1 July 2000.

U.S. Army War College. *How the Army Runs.* Carlisle Barracks, PA: U.S. Army War College, 1 July 2000.